Handbook of Highly Toxic Materials Handling and Management

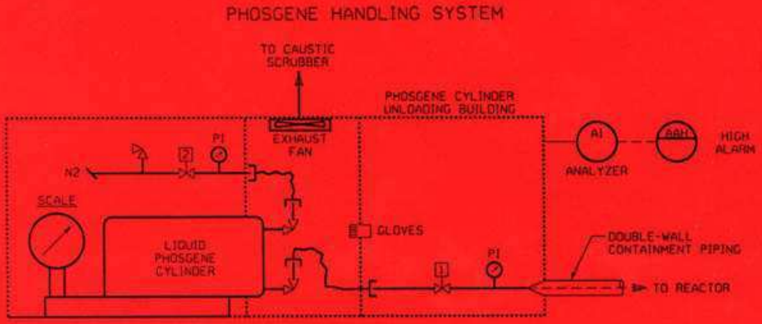

edited by

Stanley S. Grossel

Daniel A. Crowl

Handbook of Highly Toxic Materials Handling and Management

edited by

Stanley S. Grossel
Process Safety & Design, Inc.
Clifton, New Jersey

Daniel A. Crowl
Michigan Technological University
Houghton, Michigan

Marcel Dekker, Inc. **New York • Basel • Hong Kong**

Library of Congress Cataloging-in-Publication Data

Handbook of highly toxic materials handling and management / edited by
Stanley S. Grossel, Daniel A. Crowl.
p. cm. – (Environmental science and pollution control series
; 15)
Includes bibliographical references and index.
ISBN 0-8247-8923-7
1. Hazardous substances—Safety measures—Handbooks, manuals, etc.
I. Grossel, Stanley S. II. Crowl, Daniel A. III. Series: Environmental
science and pollution control ; 15.
T55.3.H3H352 1995
604.7–dc20 94-37615
CIP

The publisher offers discounts on this book when ordered in bulk quantities. For more information, write to Special Sales/Professional Marketing at the address below.

This book is printed on acid-free paper.

Marcel Dekker, Inc.
270 Madison Avenue, New York, New York 10016

Current printing (last digit):
10 9 8 7 6 5 4 3 2 1

PRINTED IN THE UNITED STATES OF AMERICA

Preface

Highly toxic materials (gases or vapors, liquids, and solids) are used in many chemical processes. Their extreme hazards and the consequences of their release into the atmosphere were dramatically demonstrated in the tragic accidents that occurred in Seveso, Italy, in 1976 and Bhopal, India, in 1984. When we were approached by Marcel Dekker, Inc., to prepare this book, it became obvious that no comprehensive treatment of this subject was available in one source. The few books we could find on highly toxic materials covered only certain areas of the subject. Even the AIChE Center for Chemical Process Safety (CCPS) *Guidelines for Safe Storage and Handling of High Toxic Hazard Materials*, which is an excellent book, does not discuss a number of topics we felt were important.

Our major objective in writing this book was to provide the necessary technical information to individuals who handle and process highly toxic materials so that they will do so safely, without adverse impact on people or the environment. Our focus was on storage, handling, transportation, transfer, processing equipment and designs, containment, spill mitigation, equipment maintenance, process integrity, toxicology, industrial hygiene, and personal protection. This book does not consider disposal of highly toxic wastes, since this was a topic of considerable scope beyond our major focus.

We realized that to make this book authoritative and comprehensive we would need input from specialists in this field. We were very fortunate to find experts from industry who were willing to prepare chapters in their areas of expertise. This book, therefore, presents what we consider the most comprehensive treatment available of a very important area of process safety and loss prevention, based on many years of experience dealing with highly toxic materials, from both a design and an operating perspective. We wish to express our sincere thanks and appreciation to our collaborators.

Stanley S. Grossel
Daniel A. Crowl

Contents

Contributors

Roger W. Bohl The Dow Chemical Company, Midland, Michigan

Daniel A. Crowl Department of Chemical Engineering, Michigan Technological University, Houghton, Michigan

Stanley M. Englund* Michigan Engineering, The Dow Chemical Company, Midland, Michigan

Stanley S. Grossel Process Safety & Design, Inc., Clifton, New Jersey

Ralph H. Hiltz Consultant, Boca Raton, Florida

Bruce S. Holden Michigan Engineering, The Dow Chemical Company, Midland, Michigan

Edward J. Kerfoot Corporate Ecology and Safety, BASF Corporation, Wyandotte, Michigan

Trevor A. Kletz Department of Chemical Engineering, University of Technology, Loughborough, Leicestershire, England

---

*Retired

Joseph F. Louvar Research Services, BASF Corporation, Wyandotte, Michigan

Thomas J. Ozimek Corporate Ecology and Safety, BASF Corporation, Wyandotte, Michigan

Roy E. Sanders Process Safety, PPG Industries, Lake Charles, Louisiana

Daniel C. Steinmetz Corporate Ecology and Safety, BASF Corporation, Wyandotte, Michigan

Handbook of
Highly Toxic Materials
Handling and Management

This Page Intentionally Left Blank

1

Introduction

Daniel A. Crowl
Michigan Technological University, Houghton, Michigan

The basic beginnings of chemistry were established by the alchemists of the Middle Ages, who were economically motivated to convert basic materials into gold. Even during these early days the alchemists reported "noxious fumes" and other maladies associated with these explorations.

Chemical production today is still motivated economically. Chemical plants take basic chemicals or raw materials and convert them into chemicals or products of incremental value. Some of the chemical products have a value that exceeds that of gold—a result that would surprise the early alchemists.

The intent of chemical production is usually not to produce toxic materials. Certainly, most of the resulting consumer products, such as plastic, rubber, glass, and so forth, are not toxic. The toxicity is almost always not the desired property of the chemical (with the exception of drugs), but is an unwanted property of the particular chemical chosen for the process. For many chemical products, the toxicity is associated with only the basic or intermediate chemicals used in the production of the final, nontoxic product. Occasionally, such as in the production of chlorine or ammonia, the toxic product is used by only a limited number of trained consumers.

The *toxicity* of a chemical or physical agent is a property of the agent describing its effect on organisms. *Toxic hazard* is the liklihood of damage to biological organisms based on exposure owing to transport and other physical factors of usage. The toxic hazard of a substance can be reduced by the application of suitable industrial control practices. The toxicity, however, cannot be changed.

In the early 1500s, Paracelsus, an early investigator of toxicology stated: "All substances are poisons; there is none which is not a poison. The right dose differentiates a poison from a remedy." Modern toxicolgy states: "There are no harmless substances, only harmless ways of using substances."

I. TOXIC AND HIGHLY TOXIC CHEMICALS

Toxic chemicals are defined as those gases, liquids, or solids that, through their chemical properties, can produce injurious or lethal effects on contact with body cells. The toxicity of a chemical can be determined only by an exhaustive study involving biological organisms—it cannot be measured directly with a laboratory apparatus, such as one with which physical properties are measured. Furthermore, the results are not absolute, with great variability being shown in the target population, based on physical condition, age, diet, and such.

A *highly toxic* material is much more difficult to define. Certainly, this classification applies to those substances for which toxic effects are severe and occur at small doses. The problem arises in providing a precise definition adequate for detailing a list of chemicals of concern, particularly for regulatory requirements.

Hodge and Sterner divided toxicity into six separate classes, as shown in Table 1. The classes are segregated based on the lethal dose. The highly toxic classes would encompass classes 5 and 6 on this scale. The difficulty with using this scale is that limited information is available on dose rates in terms of dose per mass of body weight, particularly for humans.

The National Fire Protection Association (NFPA) uses a scale from 0 through 4 to rank the health hazards associated with chemicals, particularly relative to exposure of emergency response personnel. This involves hazards of only the

Table 1 The Hodge–Sterner Table of Relative Toxicity

Toxicity rating: class	Probable oral lethal dose (human)	
	Dose	For a 70-kg person (150 lb)[a]
6: Super toxic	Less than 5 mg/kg	A taste (fewer than 7 drops)
5: Extremely toxic	5–50 mg/kg	Between 7 drops and 1 tsp
4: Very toxic	50–500 mg/kg	Between 1 tsp and 1 oz
3: Moderately toxic	0.5–5 g/kg	Between 1 oz and 1 pt
2: Slightly toxic	5–15 g/kg	Between 1 pt and 1 qt
1: Practically nontoxic	More than 15 g/kg	More than 1 qt

[a] tsp, teaspoon; oz, ounce; pt, pint; qt, quart

Source: Adapted from H. H. Fawcett, *Hazardous and Toxic Materials*, Wiley, New York, 1984 original material, without consideration of possible hazards resulting from the products of combustion. The NFPA health scale is shown in Table 2. Highly toxic materials would fall into NFPA health class 4.

The U.S. Environmental Protection Agency (EPA) has used a toxicity-rating scale based on a level of concern (LOC) equal to one-tenth of the immediately dangerous to life and health (IDLH) exposure concentrations, shown in Table 3. The *IDLH* is the maximum vapor concentration, in parts per million (ppm) from which, in the event of a respirator failure, one could escape within 30 min without a respirator and without experiencing any escape-impairing or irreversible health effects [1]. Class 4 on this scale would be considered highly toxic. The difficulty with using this system is that IDLH values are reported for only a few substances.

Another approach used to classify toxic materials is the substance hazard index (SHI). This is the method used by the state of Delaware [2]. The *SHI* is defined as the equilibrium vapor concentration above the liquid at room temperature, divided by the acute toxicity concentration (ACT). The *ACT* is defined by

Table 2 The NFPA Health Scale[a]

Rating	Definition
4	Materials too dangerous to health to expose fire fighters. A few whiffs of the vapor could cause death or the vapor or liquid could be fatal on penetrating the fire fighter's normal full protective clothing. The normal full protective clothing and breathing apparatus available to the average fire department will not provide adequate protection against inhalation or skin contact with these materials.
3	Materials extremely hazardous to health, but areas may be entered with extreme care. Full protective clothing, including self-contained breathing apparatus, coat, pants, gloves, boots, and bands around legs, arms, and waist should be provided. No skin surface should be exposed.
2	Materials hazardous to health, but areas may be entered freely with full-faced mask, self-contained breathing apparatus that provides eye protection.
1	Materials only slightly hazardous to health. It may be desirable to wear self-contained breathing apparatus.
0	Materials to which an exposure under fire conditions would offer no hazard beyond that of ordinary combustible material.

[a] In general, health hazard in fire fighting is that of a single exposure, which may vary from a few seconds up to an hour. The physical exertion demanded in fire fighting or other emergency conditions may be expected to intensify the effects of any exposure. Only hazards arising out of an inherent property of the material are considered. The above explanation is based upon protective equipment normally used by fire fighters.

Source: NFPA 325M, Fire Hazard Properites of Flammable Liquids, Gases, Volatile Solids, National Fire Protection Association, Quincy, MA, 1984.

Table 3 EPA Acute Toxicity Rating Based on a Level of Concern (LOC) Equal to 1/10 of the NIOSH IDLH

Level of Concern (LOC; ppm)	EPA LRATE Value
> 500	0
50–500	1
5–50	2
0.5–5	3
0–0.5	4

using either the IDLH value, or any other toxic exposure concentration, depending on available data. Clearly, as the vapor pressure of the liquid increases, or the ACT decreases, the SHI increases, and the material is more hazardous to store and use. By using this concept, Delaware defined an *extremely hazardous* material as any material with an SHI greater than 8000. This would be equivalent to highly toxic. Explosive materials were handled by a completely different approach.

All of the systems discussed have advantages and disadvantages. The Hodge–Sterner classes are based on dose requirements for lethality, data that are difficult to obtain for humans. The NFPA hazard classes are ranked according to the emergency response equipment requirements. The EPA toxicity classes are based on levels of concern, with limited data available. Finally, the Delaware method uses the SHI system, incorporating toxicity information and information related to the vapor pressure of the liquid at storage. Each approach is based on a different fundamental concept and, as might be expected, produces a different list of "hazardous" chemicals, although many of the chemicals appear on all lists.

Regulatory agencies, both federal, state, and local, have grappled with the definition of a hazardous material, including hazards associated with fire and explosion, as well as toxicity. The intent of these agencies is to prepare a list of materials that are the most hazardous and that require immediate attention by the chemical industry and the regulators. If the list is too long, then industry might spend limited resources on materials that do not present a significant hazard. If the list is too short, incidents might occur with chemicals not on the list and the regulatory agency will be cited as not working in the best interests of the public. As a result of this confusion, numerous differing lists have been produced by state and federal agencies. In fact, EPA produced a "List of Lists"[3] detailing the various federal chemical lists.

II. TOXIC MATERIALS PRODUCED IN THE UNITED STATES

The quantity of toxic materials produced within the United States is substantial. Table 4 lists the top 50 chemicals produced in the United States during the year

Table 4 The Top 50 Chemicals Produced During 1992

Rank[a]	Chemical	1992 production (billions of lb)[a]	Regulation[c] (see table footnotes)	NFPA health[b,d]	EPA LRATE[b,e]	Substance hazard index (SHI)[b,f]
1	Sulfuric acid	88.80	DEMNP		3	0
2	Nitrogen	58.70	DN			
3	Oxygen	42.38	N			
4	Ethylene	40.41	DNP	1		
5	Ammonia	35.95	DEMNP	3	2	8.447
6	Lime	34.72	N			
7	Phosphoric acid	25.36	DMN			0
8	Sodium hydroxide	24.02	DN			
9	Propylene	22.60	DN	1		
10	Chlorine	22.28	DEMNP		3	335,395
11	Sodium carbonate	20.89				
12	Urea	16.84				
13	Nitric acid	16.08	DELMNP		1	8,056
14	Ethylene dichloride	15.94	NP	2	0	
15	Ammonium nitrate	15.33	DN			
16	Vinyl chloride	13.23	ABDHNP	2		
17	Benzene	12.01	BDHN	2	0	
18	Ethylbenzene	10.99	NP	2	0	
19	Carbon dioxide	10.91	N		0	
20	Methyl *t*-butyl ether	10.86	DN	2		
21	Styrene	8.94	DN	2	0	
22	Methanol	8.73	N	1		
23	Formaldehyde	6.98	DEHMN	2	2	174,737
24	Xylene	6.38	DNP	2	0	
25	Toluene	6.03	BDNHP	2	1	
26	Hydrochloric acid	5.75	DEMNP			1,388
27	*p*-Xylene	5.66	DNP	2	1	
28	Terephthalic acid	5.64	D	0		
29	Ethylene oxide	5.56	DEKMNP	2	1	17,313
30	Ethylene glycol	5.12	DN	1		
31	Ammonium sulfate	4.72	DN			
32	Cumene	4.57	DN	2	0	
33	Potash	3.76				
34	Phenol	3.71	N	3	2	
35	Acetic acid	3.60	N		1	
36	Butadiene	3.18	DN	2	0	
37	Carbon black	3.02				
38	Propylene oxide	2.90	DEMNP	2	1	291
39	Acrylonitrile	2.83	ABDEMNP	4	2	

(*continued*)

Table 4 Continued

Rank[a]	Chemical	1992 production (billions of lb)[a]	Regulation[c] (see table footnotes)	NFPA health[b,d]	EPA LRATE[b,e]	Substance hazard index (SHI)[b,f]
40	Vinyl acetate	2.66	DEMN	2		1,061
41	Titanium dioxide	2.53	DN			
42	Acetone	2.39	DN	1	0	
43	Cyclohexane	2.21	DNP	1	0	
44	Aluminum sulfate	2.18	N			
45	Sodium silicate	1.80				
46	Adipic acid	1.75	N	1		
47	Calcium chloride	1.39				
48	Caprolactam	1.38				
49	Sodium sulfate	1.34	D			
50	Isobutylene	1.29	N	1		

[b] Blank means the data is not available or it is not rated.

[c] Regulatory information classifications are as follows: A, OSHA listed carcinogens; B, EPA list of priority pollutants; D, SARA Section 313 toxic chemicals; E, SARA Section 302 extremely hazardous substances; F, EPA water maximum containment levels; H, DHS drinking water action levels list of chemicals; J, National Emission Standards for Hazardous Air Pollutants (NESHAP) specific chemicals; L, Department of Transportation inhalation hazard chemicals; M, state of Delaware Extremely Hazardous Substances Risk Management Act; N, New Jersey Environmental Hazardous Substance list; P, Major Industrial Accidents Council of Canada (MIACC) list;

Sources: [a]Ref. 4; [d]Ref. 13; [e]EPA LRATE, Ref. 5; NIOSH IDLH values Ref. 1; [f]Ref. 2.

1992 [4]. This list includes 106 billion kg (234 billion lb) of organic materials and 191 billion kg (422 billion lb) of inorganics, for a total of 297 billion kg (655 billion lb) of chemicals. Many other chemicals besides those listed in Table 4 are produced. Also shown on Table 4 is the regulatory activity associated with each substance. Almost all of the top 50 chemicals are regulated in some fashion, representing a total of 275 billion kg (607 billion lb) of regulated material that is produced, transported, and used within the United States (mostly without incident). Regulated chemicals are deemed *hazardous* because of toxicity *and* fire and explosion, or reactivity. Also shown in Table 4 is the NFPA health rating, if available (NFPA only classifies materials that are flammable); the EPA classification, according to the scheme of Table 3; and the SHI. The IDLH values used to determine the EPA classification were determined from the National Institute for Occupational Safety and Health (NIOSH) *Pocket Guide to Chemical Hazards* [1]. Only one of the chemicals (acrylonitrile) in Table 4 is classified as highly toxic according to the NFPA scheme, none according to the EPA LRATE scheme, whereas five are classified as highly toxic according to the SHI method (SHI > 8000). As expected, different classification systems produce differing results.

Recent regulatory activity has moved more toward lists of hazardous materials that are not based on any calculational or classification scheme.

The conclusion to be drawn from this analysis is that it is difficult to define quantitatively a *toxic* material and even more difficult to define a *highly toxic* material. Suffice it to say that any material, which on release of a small quantity is cause for considerable concern owing to potential health effects, is a good candidate for classification as a highly toxic material. In spite of any classification scheme, industry must be prepared to identify those materials that present a realistic hazard and use the proper precautions to ensure that releases and exposures do not occur.

III. TOXIC RELEASE DATABASES

Several databases are available for toxic release information. Under the Superfund Amendments and Reauthorization Act (SARA) of 1986, facilities that handle hazardous materials are required to report spills of listed materials to the National Response Center (NRC). Information on releases, collected since the implementation of superfund, has been accumulated in an NRC database. The EPA has developed an Acute Hazardous Events Database (AHE/DB) on the causes and consequences of releases, compiled from various sources, including the NRC database and press reports. The Emergency Response Notification System (ERNS) database, compiled by EPA from reports of the NRC, the Coast Guard, and EPA Regional Offices, is a database used to collect information on releases of oil and hazardous substances as well as subsequent responses to such releases. The Hazardous Materials Information System (HMIS) is based on written reports that transport carriers are required to file.

The EPA developed a separate database [5] called the Accidental Release Information Program (ARIP). This database was developed from a questionnaire sent to facilities that had experienced significant releases. This questionnaire inquired into the practices the facilities used to prevent releases and on the techniques used to assess hazards. An analysis of information in the database demonstrated that:

The most frequently released chemicals in the ARIP database have been chlorine, methyl chloride, ammonia, sulfuric acid, and sodium hydroxide. With the exception of methyl chloride, all of these chemicals are on the top 50 chemicals list of Table 4.

Most of the releases occurred at facilities that manufacture chemicals or other products.

The quantity of chemical released varies greatly.

Although accidents commonly have more than one cause, the most commonly cited causes are equipment failure and operator error.

About a quarter of the releases were from storage vessels, and a similar number from piping and process vessels. Valves and other equipment contributed to a smaller fraction of releases.

Most releases occurred during routine processing of chemicals; loading, unloading, and maintenance played a smaller, but a significant role.

The ARIP database also shows an interesting relation between deaths and injuries, dependent on whether the event was a fire or explosion, or a release of toxic materials. For accidents resulting in deaths, fire and explosion incidents accounted for over 80% of the deaths. For accidents resulting in injuries, toxic releases accounted for almost 70% of the injuries. This confirms that, with the exception of a few events (such as Bhopal), most of the really big incidents involve fires and explosions, rather than toxic releases. Certainly the accidents involving large capital losses are almost always due to fires and explosions [6].

IV. HAZARD IDENTIFICATION AND RISK ASSESSMENT

The *hazards* in a chemical plant are due to the properties of the materials (including toxicity, flammability, reactivity, and so on), the design of the equipment, and the procedures used to operate the facility (including standard operating procedures, maintenance, emergency response, and such). The hazards are always present in a facility.

During an accident, a sequence of events (called a *scenario*) causes the hazard to result in an accident, with resulting *consequences*. The consequences can include loss of life or injury, damage to the environment, or loss of equipment, production, or inventory. The purpose of *loss prevention* is to identify the hazards and either to eliminate them or provide a mechanism to prevent the hazards from resulting in an accident.

Risk is a function of both the probability of an accident and the consequence. If either the probability or consequence of an accident is low, then the risk is subsequently low to medium in value (depending on the magnitude of the other function). The accident probability might be reduced, for example, by increasing the reliability of process equipment. Or, the accident consequence might be reduced, for example, by improving accident mitigation procedures or emergency response. An excellent example of the risk concept is seatbelt usage in automobiles. For the most part, the probability of an automobile accident is low: people frequently drive their entire lives without an accident. However, the consequences of an accident can be quite severe, particularly without seatbelt usage. Seatbelt usage is highly recommended, but mostly on the basis of the consequences of an accident, rather than the probability.

A flowchart describing the hazards evaluation and risk assessment procedure is shown in Fig. 1. After a suitable process description is available, the hazards must first be identified. This is accomplished by using various procedures currently available [8,9], including hazard and operability studies (HAZOP), fault trees, event trees, and checklists, to name a few. After the hazards are identified, the scenarios must be described. This is perhaps the most difficult and uncertain step in the procedure, primarily because there are limited guidelines and

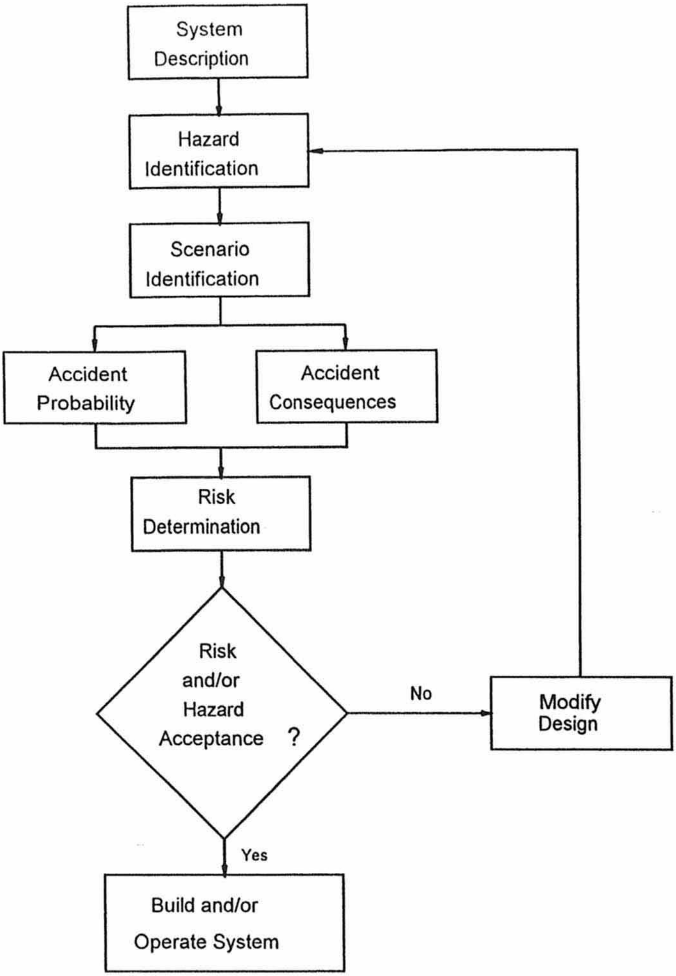

Figure 1 The hazards identification and risk assessment procedure. (From Ref. 9.)

procedures available to assist with this step. For any particular hazard, there might be dozens of scenarios that result in an accident. However, the scenario does not need to be exact, but it must be *conservative*. That is, if a decision must be made based on uncertainty or a poor understanding of the event, then the event must be selected to maximize the consequence. This conservative approach almost always results in an scenario that produces a inordinately large consequence.

The accident probability is determined from standard probability calculations [9]. These calculations are based on the failure rates of equipment and how the equipment is configured. If a detailed calculation of this type is not practical, usually owing to limited data, then the probability can be categorized as either "high," "medium," or "low," based on common operating experience.

The consequence determination is accomplished using several standard source models, representing discharge of materials from holes in process equipment, evaporation from pools, and so forth [10]. The source models are coupled to standard dispersion, explosion, and toxicity models to determine the consequence. The consequence is quantified by calculating either the area affected, the number of persons exposed, the number of persons injured, and so forth. Again, if any uncertainty exists in the method of calculation, then the calculation is selected that produces the conservative answer. If information is incomplete or data are unavailable for the calculation of the consequence, then the consequence can be categorized as high, medium, or low, based primarily on experience.

The probability and consequence are combined to estimate the overall risk. The overall risk must be compared with some standard to determine if the risk is acceptable or not. The specification of a suitable risk standard is left entirely up to the user. Frequently, rather than becoming involved entirely in the numbers, it is better to simply look at the results qualitatively to decide on acceptability.

If the risk is unacceptable, then something must be changed to reduce the risk. This can include a change in design, raw materials, intermediates, procedures, emergency response, location, and so forth. One alternative, although clearly not popular, is to abandon the process because of the high risk.

Clearly, the hazard identification and risk assessment procedure is tedious and may take many months of high-level engineering work to perform the evaluation. The procedure is best performed at the earliest point in the design of a new process, when changes can be implemented readily and without undue expense. Application of this approach to an existing process could highlight many significant problems with costly solutions.

An important concept in loss prevention is *inherent safety* [7]. Inherent safety involves removing the hazard in the first place, thereby reducing the hardware and procedures required to prevent the hazard from resulting in an accident. A good example is the selection of an alternative intermediate chemical or solvent with significantly fewer hazardous properties. If the hazards in a process are identified and eliminated, then the effort required for the risk assessment procedure is reduced. Clearly, it is usually not possible to remove all of the hazards from a process. However, the elimination of a few key hazards will significantly reduce the risk.

V. PROCESS SAFETY MANAGEMENT

An increasingly important concept in process safety is process safety management. *Process safety management* is defined as "the application of management principles and systems to the identification, understanding, and control of process hazards to prevent process-related injuries and incidents" [11]. This program involves 12 elements, as shown in Table 5. This program closely matches a similar program recommended by the American Petroleum Institute (API) [12] and now required by Occupational Safety and Health Administration (OSHA) 1910.119.

Table 5 Elements and Components of Process Safety Management

1. Accountability: Objectives and goals
    - Continuity of operations
    - Continuity of systems (resources and funding)
    - Continuity of organizations
    - Company expectations (vision or master plan)
    - Quality process
    - Control of Expectations
    - Alternative methods (performance vs specification)
    - Management accessibility
    - Communications
2. Process knowledge and documentation
    - Process definition and design criteria
    - Process and equipment design
    - Company memory (management information)
    - Documentation of risk management decisions
    - Protective systems
    - Normal and upset conditions
    - Chemical and occupational health hazards
3. Capital project review and design procedures (for new or existing plants, expansions, and acquisitions)
    - Appropriation request procedures
    - Risk assessment for investment purposes
    - Hazards review (including worst credible cases)
    - Siting (relative to risk management)
    - Plot plan
    - Process design and review procedures
    - Project management procedures

(*continued*)

Table 5 Continued

4. Process risk management
    - Hazard identification
    - Risk assessment of existing operations
    - Reduction of risk
    - Residual risk management (in-plant emergency response and mitigation)
    - Process management during emergencies
    - Encouraging client and supplier companies to adopt similar risk management practices
    - Selection of businesses with acceptable risks
5. Management of change
    - Change of technology
    - Change of facility
    - Organizational changes that may compromise process safety
    - Variance procedures
    - Temporary changes
    - Permanent changes
6. Process and equipment integrity
    - Reliability engineering
    - Materials of construction
    - Fabrication and inspection procedures
    - Installation procedures
    - Preventive maintenance
    - Process, hardware, and systems inspections and testing (prestart-up safety review)
    - Maintenance procedures
    - Alarm and instrument management
    - Demolition procedures
7. Human factors
    - Human error assessment
    - Operator–process and equipment interfaces
    - Administrative controls vs. hardware
8. Training and performance
    - Definition of skills and knowledge
    - Training programs (e.g., new employees, contractors, technical employees)
    - Design of operating and maintenance procedures
    - Initial qualification assessment
    - Ongoing performance and refresher training
    - Instructor program
    - Records management
9. Incident investigation
    - Major incidents
    - Near-miss reporting
    - Follow-up and resolution
    - Communication
    - Incident recording
    - Third-party participation as needed

(continued)

Table 5 Continued

10. Standards, codes, and laws
    - Internal standards, guidelines, and practices (past history, flexible performance standards, amendments and upgrades)
    - External standards, guidelines, and practices
11. Audits and corrective actions
    - Process safety audits and compliance reviews
    - Resolutions and close-out procedures
12. Enhancement of process safety knowledge
    - Internal and external research
    - Improved predictive systems
    - Process safety reference library

Source: Ref. 11.

Process safety management provides a skeletal framework by which to achieve a high level of process safety. However, it also requires the proper attitude, an understanding of the fundamental basis for process safety, and the proper experience. The hazard identification and risk assessment procedure described earlier is also contained within the process management elements (item 4 of process risk management). The management system must also be self-adjusting and constantly improving.

VI. CLEAN AIR ACT AMENDMENTS

The Clean Air Act Amendments of 1990 contains several sections of substantial importance to process safety. The legislation contains sections dealing with chemical safety within the workplace environment (handled by OSHA) and sections dealing with potential chemical exposures outside of the plant "fence line" (handled by the EPA).

Section 112(r) created an expanded role for the EPA in the managment of chemical process safety. This includes the development of a list of applicable chemicals (with specified threshold quantities), and regulation of the development of risk managment plans at each facility whenever quantities of chemicals exceed the threshold amount. The risk management plan considers the effect of chemical releases external to the plant environment. This plan must include a hazard assessment (including a description of the worst case scenario), a 5-year chemical release history, and a detailed description of the facilities release prevention and emergency response programs. The proposed rule for this part of the Clean Air Act was released by EPA, in November 1993, for review and comment.

Section 304 of the Clean Air Act Amendments leads to a regulation entitled "Process Safety Management of Highly Hazardous Chemicals." This regulation, developed by OSHA, was published as 29 CFR 1910.119.

The OSHA regulation provides a list of 128 chemicals and applicable threshold quantities. The regulation applies to any facility that has these chemicals in excess of the threshold quantity. The legislation deals with chemical safety within the workplace environment and is specifically designed to protect worker safety and health.

The major parts of the OSHA 1910.119 regulation are as follows.

a. Employee participation in development of the process hazards management system.
b. Process safety information: This requires the compilation of written process safety information to enable the employer and the employees involved in operating the process to identify and understand the hazards posed by these processes. This shall include the following:
    - Information on the chemicals themselves, including (at least) toxicity information, permissible exposure limits, physical data, reactivity data, corrosivity data, thermal and chemical stability data, and the effects of mixing different materials
    - Information on the technology of the process must also be written and available, including a block diagram of the process, process chemistry, maximum intended inventory, safe upper and lower limits of operation, and evaluation of the consequences of deviations
    - Information pertaining to the equipment in the process, including materials of construction; piping and instrument diagrams; electrical classifications; relief system design and design basis; ventilation system design; design codes and standards; material and energy balances for the process; and safety systems (i.e., interlocks)
c. Process hazard analysis: This can include such methods as what-if, checklists, what-if/checklists, hazard and operability study (HAZOP), failure modes and effects analysis (FMEA), fault tree analysis, or any other suitable method. The hazard analysis must address the hazards of the process, identification of previous incidents that have a likely potential for catastrophic consequences, engineering and administration controls applicable to these hazards, consequences of failure of these controls, facility siting, and human factors.
d. Operating procedures: Written operating procedures must provide clear instructions for safely conducting activities involved in each process. This shall address
    - Operating procedures, including initial start-up, normal operations, temporary operations, emergency shutdown, emergency operations, normal shutdown, and start-up following a turnaround, or after an emergency shutdown
    - Operating limits, including consequences of deviations and steps required to correct

  - Safety and health considerations, including properties of the chemicals used, precautions necessary to prevent exposure, control measures after physical contact or release, quality control for raw materials, and any special or unique hazards
  - Safety systems and their function, including operating procedures for these systems, and safe work practices to provide for the control of hazards during operations such as lockout/tagout, confined space entry, process entry, and site security

e. Training, including initial training of employees, refresher training, and training documentation.

f. Contractors: This includes contractor certification, training, notification, and such.

g. Prestart-up safety review: This procedure must ensure that
  - Construction and equipment are in accordance with design specifications.
  - Safety, operating, maintenance and emergency procedures are in place and are adequate.
  - Training of employees is completed.

h. Mechanical integrity: This includes
  - Written procedures to maintain the on-going integrity of process equipment
  - Training for process maintenance activities
  - Inspection and testing
  - Correction of equipment deficiencies
  - Quality assurance of new equipment

i. Hot-work permits for work involving ignition sources that occur near the process.

j. Management of change procedures to ensure replacement in kind for equipment, review of new procedures and equipment, and so forth.

k. Incident investigations: These must be initiated less than 48 h after an accident and must use an investigation team. Results of the investigation will be detailed in a report. This report will include date and time of incident, date investigation initiated, a description of the incident, the factors that contributed to an incident, and any recommendations that resulted from the investigation.

l. Emergency planning and response: An emergency action plan must be developed.

m. Compliance audits: These ensure that the management system is working properly.

VII. CHEMICAL MANUFACTURERS' ASSOCIATION RESPONSIBLE CARE

In September of 1990, the Chemical Manufacturers' Association (CMA) approved the Process Safety Code as part of the Responsible Care program, which all member companies must support. The purpose of the code is to prevent fires and explosions and accidental releases of chemicals. Responsible Care includes a total of six codes of management practices covering Community Awareness and Emergency Response (CAER); Pollution Prevention; Process Safety; Employee Health and Safety; Distribution; and Product Stewardship. Details of the Process Safety Code are provided in Table 6. The guiding principles of Responsible Care are the following [14].

a. To recognize and respond to community concerns about chemicals and chemical operations
b. To develop and produce chemicals that can be manufactured, transported, used, and disposed of safely
c. To make health, safety, and environmental considerations a priority in planning for all existing and new products and processes
d. To report promptly to officials, employees, customers, and the public, information on chemical-related health or environmental hazards and to recommend protective measures
e. To counsel customers on the safe use, transportation, and disposal of chemical products
f. To operate plants and facilities in a manner that protects the environment and the health and safety of employees and the public
g. To extend knowledge by conducting or supporting research on the health, safety, and environmental effects of products, processes, and waste materials
h. To work with others to resolve problems created by past handling and disposal of hazardous substances
i. To participate with government and others in creating responsible laws, regulations, and standards to safeguard the community, workplace, and environment
j. To promote the principles and practices of Responsible Care by sharing experiences and offering assistance to others who produce, handle, use, transport, or dispose of chemicals

The CMA is presently working on a measurement system, called Prospect, to quantify the process safety performance of member companies[15]. It will require members to file incident reports relating to process safety each year. The details of the system are currently being developed by CMA.

The various regulatory requirements and industrial consensus standards provide a real challenge to the engineer for implementation. Fortunately, these items are similar in design, with much overlapping material and are mostly complementary. However, the reporting, verification, and auditing procedures are different, resulting in increased paperwork for all involved.

Table 6 Responsible Care Process Safety Code

Management leadership

1. Leadership in achieving continuous improvement in performance, through policy, participation, communications, and resource commitments.
2. Clear accountability for performance against specific goals for continuous improvement.
3. Measurement of performance, compliance audits, and follow-through on corrective actions.
4. Investigation, reporting, corrective action, and follow-up of each incident that results or could have resulted in a fire, explosion, or accidental chemical release.
5. Sharing of relevant safety knowledge and lessons learned with industry, government, and community.
6. Use of CAER (community awareness and emergency response) process to ensure public concerns are considered in design and implementation of process safety systems.

Technology

7. Current, complete documentation of process design and operating parameters/procedures.
8. Current, complete documentation of hazards of materials and process technology.
9. Periodic assessment and documentation of process hazards, and implementation of actions to minimize risks associated with chemical operations, including possibility of human error.
10. Management of changes to chemical operations to maintain or enhance the safety originally designed into the facility.

Facilities

11. Consideration and mitigation of potential safety effects of expansions, modifications, and new sites relating to the community, the environment, and employees.
12. Facility design, construction, and maintenance using sound engineering practices.
13. Safety reviews on all new and modified facilities during design and before start-up.
14. Documented maintenance and inspection programs that ensure facility integrity.
15. Sufficient layers of protection to prevent escalation of a single failure to a catastropic event.
16. Provision for control of processes/equipment during emergencies resulting from natural events or utility disruptions.
17. Identification of skills and knowledge necessary to perform each job.
18. Establishment of procedures and work practices for safe operation and maintenance.
19. Training for all employees to reach and maintain proficiency in safe work practices before work assignment and in skills needed to perform job.
20. Demonstration and documentation of skill proficiency before work assignment and periodically thereafter.
21. Programs to ensure that employees in safety-critical jobs are fit for duty and not compromised by external influences, including alcohol and drug abuse.
22. Provisions that contractors either have programs for their own employees consistent with this code or are included in the member company's program, or combination thereof.

Source: Ref. 15.

VIII. SUMMARY

This chapter has presented several concepts related to highly toxic materials. First, a very large quantity of toxic materials are produced, transported, and used throughout the United States, almost entirely without incident. The chemicals most likely to be involved in a release are, for the most part, chemicals that are produced in the largest quantity. Second, it is difficult, particularly from a regulatory standpoint, to define a highly toxic material. From a practical standpoint, a highly toxic material is one that, after release of a relatively small quantity, can result in a significant health hazard to employees and the public. Third, risk is a function of both the probability and the consequence of an incident. Fourth, several regulatory requirements (forthcoming EPA Risk Management Plan, OSHA 29 CFR 1910.119), and industry consensus standards (Center for Chemical Process Safety *Process Safety Management Guidelines*, Chemical Manufacturers' Association Responsible Care program) provide substantial requirements for safety programs at a chemical facility.

Finally, it should be noted that highly toxic materials represent a minimal risk if they are handled safely. With few exceptions, the technology presently exists to manufacture, transport, and use these materials with minimal risk (and maximum benefit) to employees and the public.

REFERENCES

1. National Institute for Occupational Safety and Health (NIOSH), *Pocket Guide to Chemical Hazards*, NIOSH, Cincinnati, OH, 1990.
2. W. L. Frank, "The technical basis for regulation of toxic and explosive substances in Delaware, *AICHE Health and Safety Symposium*, Orlando, FL, 1990.
3. U. S. Environmental Protection Agency (EPA), *Title III List of Lists*, EPA, Washington, DC, 1989.
4. Facts and figures for the chemical industry, *Chem. Eng. News*, June 28:41 (1993).
5. EPA: *Acute Hazardous Events Data Base (1989)*, EPA, Washington, DC, 1989.
6. *A Thirty Year Review of One Hundred of the Largest Property Damage Losses in the Hydrocarbon—Chemical Industries*, M&M Protection Consultants, Chicago, IL, 1987.
7. T. Kletz, *Plant Design for Safety: A User Friendly Approach*, Hemisphere Publishing, New York, 1991.
8. *Guidelines for Hazard Evaluation Procedures, With Worked Examples*, 2nd ed., AICHE Center for Chemical Process Safety, New York, 1992.
9. D. A. Crowl, and J. F. Louvar, Risk assessment, *Chemical Process Safety, Fundamentals with Applications*, Prentice Hall, Englewood Cliffs, NJ, 1990, Chap. 11.
10. D. A. Crowl, and J. F. Louvar, Source models, *Chemical Process Safety, Fundamentals with Applications*, Prentice Hall, Englewood Cliffs, 1990, Chap. 4.
11. *Plant Guidelines for Technical Management of Chemical Process Safety*, AICHE Center for Chemical Process Safety, New York, 1992.

12. American Petroleum Institute (API), *Management of Process Hazards*, API Recommended Practice 750, API, Washington, DC, 1990.
13. National Fire Protection Association (NFPA), *Fire Protection Guide on Hazardous Materials*, 9th ed., NFPA, Quincy, MA, 1986.
14. Dow Chemical Company, *Responsible Care, In View of Our Future* [brochure], Dow Chemical Company, Midland, MI.
15. New initiatives take aim at safety performance of chemical industry, *Chem. Eng. News*, November 29:12 (1993).

2

Industrial Toxicology

Edward J. Kerfoot, Daniel C. Steinmetz, and Thomas J. Ozimek
BASF Corporation, Wyandotte, Michigan

I. INTRODUCTION

A. General Overview

The scope of this chapter on industrial toxicology is to introduce the engineer and other plant personnel to some basic toxicological principles and relate how this information is employed to better understand the potential harmful effects of various chemical substances in an industrial setting. Engineers must be aware of the toxicity of hazardous materials to control these substances and to design the appropriate safeguards into plants that manufacture or process these chemicals in their industrial operations.

This chapter will review some key areas of industrial toxicology, including the major routes of occupational exposures, general toxic properties of selected chemical substances, some applications of toxicological testing, basic risk assessment and risk management, and current product safety and product stewardship practices.

B. Industrial Toxicology

Industrial toxicology is defined as that branch of toxicology involved with an evaluation of the harmful effects of chemical substances to individuals who may be exposed during the course of their employment.

Historically, the science of toxicology was originally developed as the study of "poisons," since many early experiences were due to accidental or, sometimes, intentional poisonings. In modern times, toxicology is more associated with other basic and applied sciences, such as pharmacology, and is focused on the adverse effects of pharmaceuticals and chemicals. Today, toxicology is becoming recognized as an individual science, since there are many branches of toxicology that can be grouped under three main areas: (1) food and drug, (2) industrial and environmental, and (3) forensic and analytical. The scope of this chapter will focus on industrial toxicology and the potential effect of hazardous chemicals to workers in the industrial environment.

II. ROUTES OF OCCUPATIONAL EXPOSURE

A. General Considerations

Before discussing the toxicity of chemicals, it is important to review the various routes of exposure by which substances enter the body. The common major routes of exposure for humans are inhalation, skin absorption, and ingestion. A hazardous material may enter the body by one or more of these routes, depending on the nature of the substance, the exposure conditions, and the individual. In addition, the consequences of direct skin and eye contact with chemicals should be considered. In experimental toxicological investigations, other routes of administration of toxic substances, such as parenteral or injection, can be employed in addition to the major routes of human exposure already mentioned. By each of these routes, the body has natural defenses to handle a certain amount of chemical substance. When that limit has been reached, the body's defense mechanisms are overwhelmed or damaged and adverse reactions can occur. This dose–response phenomenon varies with the nature of the substance, the amount or concentration of the substance, the type of exposure, and the individual response. The following review will concentrate on the three major routes of human exposure by which substances enter the body and some other skin and eye considerations. Once the specific material enters the body by various routes, it can be absorbed into the bloodstream, distributed throughout the body, metabolized, and deposited in tissues or excreted.

B. Inhalation

The inhalation route of exposure is probably the most common, since many materials are potentially inhaled over the course of a working day. A person normally inspires approximately 10,000–12,000 L of potentially contaminated air per working day.

1. Anatomy and Physiology

The respiratory system consists of a number of passages for the inspiration and expiration of air and an organ for the absorption of oxygen and the elimination of the waste carbon dioxide. These structures consist of the nose, pharynx, larynx, trachea, bronchi, and lungs.

The nose, pharynx, and larynx are the structures that are generally considered the upper respiratory tract. The trachea divides into the two primary bronchi, which further divide into smaller and smaller structures: secondary bronchi, bronchioles, respiratory bronchioles, alveolar ducts, alveolar sacs, and the individual alveoli. There are 23 "generations" or subdivisions from the trachea to the respiratory bronchiole. The whole respiratory system resembles an inverted tree, with the trachea as the trunk and the bronchi as the branches.

The lungs are cone-shaped organs that fill the thoracic cavity. They extend from the diaphragm to a point above the clavicles and lie against the ribs, both anteriorly and posteriorly. The left lung is partially divided by fissures into two lobes: upper and lower; and the right lung is divided into three lobes: superior, middle, and inferior. Internally, both lungs contain about 300 million alveoli in which the exchange of respiratory gases takes place.

2. Physiology

The functional process of respiration can be divided into ventilation, gas diffusion, and gas transport. There is also a regulatory process to control respiration by nerves and chemoreceptors. Very simply, respiration consists of the transport of oxygen from the atmosphere to the cells and, in turn, the transport of carbon dioxide from the cells back to the atmosphere.

(*a*) *Ventilation*. Ventilation is a process of bringing air in and out of the respiratory system. To do this, both the volume of air and the respiratory rate accommodate the pulmonary needs. At rest, a person usually breathes about 500 cm^3 of air per breath, at a rate of 12 breaths per minute, resulting in a minute volume of about 6 L/min. With heavier working conditions, that minute volume increases tremendously, up to 50–75 L/min or more. This demonstrates the tremendous reserve capacity of the lungs, depending on the pulmonary needs.

There are several volume and capacity measurements that are considered from a physiological and clinical standpoint. For example, the *vital capacity* is a forced inhalation and exhalation that is monitored on individuals using a pulmonary spirometer. Vital capacity consists of a combination of three lung volumes, which is used to medically monitor any developing restrictive lung disease. When this vital capacity is measured over time, such as 1 s, it is called a forced expiratory volume 1 (FEV_1). The FEV_1 is used to determine whether there is obstructive pulmonary disease associated with the airways or lungs. Both of these tests can detect hypoventilation, or underventilation, of the lungs; conditions that cause hypoventilation of the airways and lungs can lead to pulmonary disease. There are many more sophisticated pulmonary function tests that are used to determine a person's breathing capabilities for ventilation as well as gas diffusion.

There are also muscles for inspiration and expiration that bring air into and out of the lungs. The normal muscles for inspiration are the diaphragm and the external intercostals. When a forced inspiration is necessary, other muscles are also needed. Normal expiration is largely passive recoil of the lungs, and no muscles are necessary, except in a forceful expiration, for which other chest and abdominal muscles are used.

(*b*) *Gas diffusion*. When oxygen is brought into the lungs and is transported down to the individual alveoli, the oxygen must pass through the respiratory membrane, or alveolar capillary membrane, before it is absorbed into the pulmonary vessels. Gas diffusion takes place when the available oxygen is diffused across the membrane from the alveoli into the blood and, conversely, the carbon dioxide waste product passes from the blood to the alveoli, where it is exhaled. Other toxic gases and vapors can be inhaled, pass through the membrane, and then be absorbed into the blood and carried systemically throughout the body. The respiratory membrane consists of various cell layers. From the interior of the alveolus outward, the layers consist of surfactant, a fluid layer, an alveolar epithelium, an interstitial space, a capillary basement membrane, and a capillary endothelial membrane.

Some of the major factors that affect gas diffusion across the alveolar–capillary membrane are

a. Thickness of the membrane (0.2–0.4 μm)
b. Surface area of the membrane (50–70 μm^2)
c. Diffusion coefficient of the gases
d. Pressure gradient between the two sides of the membrane

Whenever these factors are outside of their normal values, the exchange of oxygen and carbon dioxide is impeded.

(*c*) *Gas transport*. Once the oxygen has diffused across the membrane, it passes into the plasma of the pulmonary capillaries, where it combines with the hemoglobin of red blood cells to form oxyhemoglobin. About 97% of the available oxygen is transported in combination with hemoglobin, and the remaining 3% is transported in the dissolved state in the plasma. At higher pressures, the amount transported in the dissolved state is increased.

In the lungs, the partial pressure of oxygen (Po_2) is about 104 mm Hg, which facilitates the diffusion of oxygen across the membrane to bind with hemoglobin of red blood cells to be distributed throughout the arterial blood system. In the tissues, where the Po_2 is about 40 mm Hg, the hemoglobin is reduced and oxygen is readily released. Carbon dioxide, as waste, is carried back in venous blood with similar, but lower, pressure gradients from the tissues to the lungs where CO_2 is ultimately exhaled.

3. Pulmonary Disorders

Pulmonary disorders can be easily discussed relative to their pathophysiology; namely, abnormalities in ventilation, gas diffusion, and gas transport. The three main areas and some examples are given:

a. Abnormalities that cause alveolar hypoventilation
    1. Increased airway resistance (asthma, emphysema)
    2. Increased tissue resistance (fibrosis)
    3. Decreased compliance of the lungs and thorax (fibrosis, cancer)
b. Diseases that affect abnormal pulmonary diffusing capacity
    1. Decreased surface area of respiratory membrane (emphysema)
    2. Increased thickness of respiratory membrane (fibrosis)
c. Abnormalities of oxygen transport
    1. Anemia (methemoglobinemia, carboxyhemoglobinemia)

4. Pulmonary Defense Mechanisms

The pulmonary system is well equipped to defend against moderate exposures to hazardous materials. The three basic pulmonary defense mechanisms are (1) nasal entrapment, (2) mucociliary system, and (3) phagocytosis.

Nasal entrapment is the first line of defense against chemical exposures to toxic gases, mists, dusts, and fumes. The nasal structures, including nasal hairs, turbinate bones, and other anatomical structures, assist in trapping and impacting the larger-sized inhaled substances, 10–25 μm, as well as water-soluble substances. The mucociliary system involves mucus and cilia lining the respiratory tract. The goblet cells of the respiratory epithelium secrete mucus, which attracts materials in the 2-to-10-μm–sized range that have bypassed the nasal and pharyngeal areas. Cilia are string-like projections attached to columnar epithelial cells that line the respiratory tract and beat metachronally to trap particles and gases. Mucus and cilia trap substances and allow them to be brought to the mouth, where they are expectorated or swallowed. A third defense mechanism is phagocytosis, which involves lung-clearing cells, called alveolar macrophages. These cells engulf materials in a size range of about 0.2–5 μm that have bypassed the other pulmonary mechanisms and have been inhaled, deposited, and retained in the alveoli.

Therefore, the pulmonary system is well designed to defend against some "safe" concentrations of hazardous substances. However, when the concentration is elevated, these defense systems may be overcome or damaged, and pulmonary disorders can result.

C. Dermal

The next most common method of exposure is by dermal contact. Since the skin potentially affords a large surface area, about 2 m^2, for absorption of toxic materials, it is important to consider the exposed skin surfaces of those individuals working with materials that come into contact with the skin.

1. Anatomy and Physiology

The skin is essentially a resilient membrane, resting on a connective tissue framework containing nerves, blood vessels, lymphatics, glands, hair follicles, and muscles. The thickness of the skin varies from 0.5 mm on the eyelids to 3–4 mm on the back, palms, and soles.

The three basic layers of the skin are the epidermis (outer layer), dermis, and subcutaneous layer. The epidermis consists of various substructures: an outer lipid layer (acid mantle), stratum corneum, stratum lucidum, stratum granulosum, and stratum germinativum. The dermis or midlayer, considered the true skin, incorporates other structures, such as blood vessels and capillaries, sweat ducts, sebaceous glands, nerves, connective tissue, fat, and hair follicles. The deepest skin layer links the dermis with the tissue covering muscle and bone. There are deeper blood vessels, nerves, and glands innervating this part of the skin. The functions of the skin vary from protection against chemical, physical, and biological agents; mechanical trauma; and water loss; to other functions, such as sensation, heat regulation, and metabolism.

2. Absorption Through the Skin

Some chemical agents can be absorbed through the intact skin. From the outer surface, this absorption can take place through the stratum corneum, hair follicles, and sweat ducts. When the integrity of the skin is disrupted by abrasions, lacerations, and cracking, materials can be more easily absorbed through the outer skin layers. Substances have the ability to penetrate the skin at a rate determined by their lipid/water partition coefficients. Therefore, substances that are very lipid- or fat-soluble, such as methylene chloride, methyl chloroform, carbon tetrachloride, trichloroethylene, toluene, or methanol, penetrate the skin readily. Other substances, such as organic phosphate insecticides, phenol, or aniline, are also absorbed through the intact skin. Once these lipid-soluble chemical substances penetrate the skin, they are absorbed into the bloodstream and distributed systemically. Therefore, the potential for dermal exposure must be considered whenever these skin absorbable chemicals are being handled in the workplace.

D. Ingestion

When materials are ingested, they must pass through the gastrointestinal tract. There they may be absorbed from different anatomical structures at various rates and distributed throughout the body by the systemic circulation, or pass unchanged and be excreted in the feces. The chemical properties of the substance determine whether it will be absorbed from the acidic pH of the stomach, or from the nearly neutral pH of the intestine. The criteria governing the absorption of chemical substances from the gastrointestinal (GI) lumen are basically the same as those criteria for the passage of substances across other biological membranes. Substances that form insoluble precipitates in the gastrointestinal lumen, or are insoluble in water or lipid, cannot be readily absorbed from the GI tract and may pass through the system unchanged.

1. Anatomy and Physiology

The gastrointestinal tract consists of the following structures for the passage of food and water: mouth, esophagus, stomach, small intestine, large intestine, and rectum.

Once a substance is absorbed from the GI tract, it must pass through the mucosa, submucosa, circular muscle layer, long muscle layer, and serosa before it enters the bloodstream. The major function of the GI system is to supply the body with the necessary nutrients and water for normal function.

Some substances are accidentally ingested in the workplace from various contamination sources. Eating in working areas is a classic means of ingesting hazardous materials. Some materials can be ingested after inhalation as well. In the normal respiratory clearing process, particles move up the pulmonary system to the mouth, where they are expectorated or swallowed. After swallowing, the particles are ingested and pass through the GI tract.

Accidental ingestion of substances can also occur in the workplace, but more often these poisonings take place in the home. Medical treatments depend on the nature of the material in emergency first aid measures for ingestion. Some materials, such as organic solvents, present an aspiration concern, and emesis (vomiting) is not recommended. Induction of vomiting is also contraindicated if a corrosive material is ingested, since the corrosive material will reinjure the delicate esophagus when regurgitated. The treatment of cases in which emesis is contraindicated includes other methods such as dilution or charcoal absorption.

E. Skin and Eye Contact

1. Skin

Besides skin absorption, many chemicals act directly on the skin and damage the skin surface by creating various types of dermatitis, which is an important occupational disease. About 2000 chemicals are classified as primary irritants. These agents act directly on the skin, causing varying degrees of irritation. Some solvents create a defatting of the outer skin layer. Some agents, such as resins, may produce a sensitization reaction in certain hypersensitive individuals. Other chemicals, such as chlorinated dioxins, can cause acne-like skin diseases, called chloracne. Asphalts and pitch, in combination with sunlight, can create hyperpigmentation. Other materials, like phenolic compounds, can create hypopigmentation. Contact with chromates and arsenic compounds is associated with edema and ulcers of the skin. Many alkaline agents can be corrosive to the skin and cause chemical skin burns. In addition, some chemicals have been suspect in causing neoplasms that lead to skin cancer.

2. Eye

Many chemical agents can damage the eye, causing varying degrees of eye irritation or more serious effects. One result of irritation is lacrimation or eye tearing. Some chemicals that cause lacrimation are ammonia, formaldehyde, and sulfur dioxide. One of the most potent lacrimators is the agent used in mace and tear gas. The active chemical here is primarily chloroacetophenone, used in small concentrations with solvents. Another group of potent lacrimators are allyl disulfides, the chemicals that are present in onions.

Chemical eye burns with acids and alkalies are common and can be very serious, depending on the pH of the chemical, its concentration, and the duration of the exposure. Acids with a higher pH can cause burning of the eyes, but may not cause severe corneal damage unless untreated. Acids usually form a precipitate and usually do not cross the corneal epithelium to cause more serious damage; however, some stronger acids (≤ pH 2) do have that capability. Alkalies have the ability to penetrate deeper into the eye structure because they more readily pass through the corneal epithelium. Whenever there is a potential for chemicals causing eye irritation or more serious damage, personal eye protection, by way of safety glasses, goggles, face shields, and such, should be employed. Whenever a material contacts the eyes, adequate and prolonged eye irrigation should be used with proper eyewash fountains. In general, "corrosive" materials to the eye fall into the pH range of ≤ 2 and ≥ 11.5.

F. Other Routes

From a toxicological-testing perspective, there are other routes to be considered when administering substances to animals. Parenteral (*para* = beside + *enteron* = intestine) routes are utilized in which the material is placed outside of the intestine or GI tract. In other words, the substance may be injected into the animal in a toxicological study.

The usual parenteral routes of administration are intramuscular, intraperitoneal, and subcutaneous. All of these injectable routes can be used to deliver a specific dose (milligram of substance per kilogram body weight; mg/kg) in a controlled animal study. An intratracheal method of administration is employed when material is placed directly into the trachea and lungs. This method can be used instead of the more involved inhalation exposure testing.

III. TOXIC PROPERTIES

A. Toxicity and Hazard

Although the terms are used interchangeably, there is a distinction between toxicity and hazard. *Toxicity* is considered to be the ability of a substance to produce an adverse effect to the organism. *Hazard*, on the other hand, involves the probability or likelihood that this adverse effect will occur.

The toxicity of a material is an inherent property of the substance, much like the chemical and physical characteristics. The toxicity of the material and potential exposure to it are evaluated in determining whether a hazard exists. Parameters that influence the hazard are exposures related to the physical nature of the substance, how it is handled, the amount of material, and the various exposure routes. Under constant conditions, the toxicity of a material remains relatively constant, but other factors are involved when assessing the hazard.

Some highly toxic substances may have a low degree of hazard if the likelihood of contact or exposure is minimal. Conversely, something that has a lower magnitude of toxicity may be highly hazardous because of extensive contact or high potential exposures. Although the toxic effects of many chemical substances are known, there are many other commonly used substances that are still not well defined. Most of the more than 65,000 discrete chemicals in commerce today have limited toxicological profiles. Frequently, we can group families of chemicals and estimate their toxicity from their properties and similar analogous structures. For others, it may be difficult to make those estimates and generalizations.

B. Dose–Response Relationship

Toxicologists have known for centuries that the effects of toxic substances follow the *dose–response* relationship. This principle is the fundamental concept of toxicology. In 1537, Paracelsus indicated that "All things are poison and nothing is without poison; only the dose makes a thing a poison." The goal of the toxicologist is to determine that "safe" dose.

Dose–response relationships are commonly developed by correlating exposure concentration, or the total amount of chemical administered, with the intensity of response. Toxic effects result from active chemicals reaching target tissues, not simply from the amount of chemical administered. The dose–response curve in toxicology is a plot of the dose or concentration of the substance administered and the biological response. The measured response may vary from slight, nonadverse effects, to frank target organ effects and deaths. In mortality studies, for example, a sigmoid dose–response curve results when mortality and dose are plotted. For an inhalation study, the dose is represented by the concentration and time of exposure (the C_t factor, usually expressed as ppm-min). For example, when an individual is exposed to 0.2 ppm of phosgene for 10 min, the C_t is 2 ppm-min.

C. Toxicological Testing Evaluations

Generally, toxicological testing is conducted on chemicals to perform toxicity assessments for human exposure. In toxicological research, test animals are exposed to chemicals by various routes of exposure and observed for the appearance of toxic, biochemical, physiological, or pathological alterations, or combinations thereof. The toxicologist must be able to evaluate and interpret the significance of the overall toxic profile of the substance in question. Ideally, to assess the potential health hazards of any chemical, toxicological evaluations must be conducted to develop the information necessary to predict human responses.

To become familiar with toxicological data, testing methods should be reviewed. These toxicological testing methods can be classified into three major categories: (1) overall toxic effect, (2) specific types of toxicity, and (3) human evaluations. Chemical identification and a knowledge of the chemical and physical properties, impurities, and so on, are required before any testing can commence. In addition, some structure–activity relationships (SAR) can be reviewed to estimate the toxicity between materials of similar chemical structure.

1. Overall Toxic Effects

(*a*) *Acute.* A battery of short-term tests is often conducted to characterize the potential acute effects of a chemical substance. This characterization is accomplished through lethal dose—50% (LD_{50}) and lethal concentration—50% (LC_{50}) studies. The LD_{50}, or LC_{50}, is the dose, or concentration, at which 50% of the test animals die. Other short-term tests can also be conducted to observe skin and eye irritation and skin sensitization.

(*b*) *LD_{50}.* The LD_{50} is determined by administering a material to an animal by the oral, dermal, or various parenteral routes and recording the mortality. Usually, a single application at various dose levels is administered followed by a 14-day observation period. During that period, the number of dead animals is recorded and plotted against the dose.

In determining the LD_{50}, it is important to consider the animal species and route of administration. The animal species used for LD_{50} studies are usually rats and mice, but other animals, such as rabbits, can also be used for a dermal LD_{50}. The route of administration is also important, since hazardous materials are absorbed differently from oral and parenteral routes. If LD_{50} values are being compared between substances, these variables must be kept constant for a true comparison. Sometimes it is also helpful to observe the slope of the LD_{50} curve to determine if the lethality has a narrow or broad dosage range.

From this basic study, some generalizations can be made about the classification of the toxicity of the material, from extremely toxic to practically nontoxic. This basic short-term information is primarily used to obtain some initial toxicological information that is used to characterize the toxicity on material safety data sheets and labels.

(*c*) *Subchronic and chronic.* Subchronic toxicity testing is conducted to bridge the gap between acute and chronic toxicity. The testing consists of oral, dermal, or inhalation studies with repeated exposures that are usually conducted for 30–90 days. Long-term testing is usually conducted for most of an animal's lifetime (18–24 months in rodents). The dose or concentration levels are normally lower than the short-term study levels and are more representative of actual exposure conditions. Higher mammals, such as dogs, pigs, and monkeys, are used in long-term studies in which periodic testing can be conducted. For example, swine exposed by inhalation to cobalt powders can be monitored periodically for possible pulmonary function abnormalities.

2. Special Testing

There are a variety of specific toxicological tests that can be conducted for various results. Target organ effects can be observed from a study in which specific organs are affected. For example, chemical substances affecting the liver cause hepatotoxic effects, whereas those affecting the nervous system can cause neurotoxic effects. Since people are exposed to multiple chemicals, the effect of one chemical may actually potentiate the effects of the other in a combined exposure. One chemical may act synergistically with another in producing these compounded results.

Some very specialized testing can be conducted for mutagenic, teratogenic, and carcinogenic effects. All of these tests address specific effects from exposures to hazardous substances, that are of major concern today.

(*a*) *Mutagenicity*. There are several in vitro and in vivo test methods developed to observe various types of mutagenic effects from exposure to chemical substances. The three general types of mutagenicity tests, with examples of each, are (1) point mutations (Ames test), (2) chromosomal aberrations (dominant–lethal), and (3) primary DNA damage (unscheduled DNA synthesis). Probably one of the more common mutagenicity tests used today is the Ames test, named after Bruce Ames, who developed it.

The Ames test is an in vitro test using *Salmonella* bacteria. A specific histidine-deficient *Salmonella* strain is exposed in a petri dish to the test chemical. If the organisms mutate and grow when exposed, the chemical has caused a reverse-mutation and allowed the deficient salmonellae to multiply where they would not normally survive. There are also variations of this test that "activate" the system to enhance the study conditions. The practical importance of the Ames test is that it has been used as a screening test for carcinogenicity. When the positive Ames test results are compared with the long-term bioassays on the same materials that are determined to be carcinogenic, some screening correlations are made. About 70% of the carcinogenic materials from these bioassays are Ames-positive. Therefore, this mutagenic test is utilized as a cancer-screening test for hazardous substances. However, there can be false-positive and false-negative results that must be considered.

(*b*) *Teratogenicity*. Some agents cause developmental problems with offspring when pregnant females are exposed. These studies involve exposing pregnant animals at critical gestation periods to determine if the chemical substance crosses the placenta and results in developmental problems, such as bone, heart, and brain defects. The classic human teratogenicity case was experienced with the tranquilizer, thalidomide, which was taken by pregnant women in Europe, resulting in offspring with deformed limbs and other developmental problems. The practical implication, here, is the concern of employment of women of "child-bearing capability" especially in chemical plants today.

(*c*) *Carcinogenicity*. Long-term animal studies, such as bioassays conducted by the National Cancer Institute (NCI) under the National Toxicology Program (NTP), are designed to expose animals for their lifetime to chemical substances to determine a substance's carcinogenic potential. Chemical carcinogens are classified according to the mechanism by which they act (e.g., genotoxic mechanisms). Some examples of chemical carcinogens are vinyl chloride, which causes angiosarcoma, and bis(chloromethyl)-ether (BCME), and some chromium compounds, which cause lung cancer.

(*d*) *Environmental testing*. Various types of environmental toxicological tests are conducted to determine such parameters as aquatic toxicity and environmental fate. These tests are of practical importance when hazardous chemical substances are discharged from plants and flow into various water sources. The results can be fish kills or other toxicity to aquatic organisms. Also, persistence in the environment and biodegradability should be considered in assessing the potential environmental effects of a chemical.

(*e*) *Combustion testing*. Another area of special testing involves combustion toxicology. In chemical plant and building fires, one must be concerned with the various combustion products. Certainly, anyone involved with in-plant fires, as part of the emergency response team, must be aware of other possible hazardous chemicals from fires, such as oxides of nitrogen, chlorine, phosgene, cyanide, carbon monoxide, and others.

3. Human Testing

In some cases, actual human testing is carried out after the substances have been evaluated through adequate animal testing. This testing is very carefully designed and controlled, with physicians and toxicologists in attendance. It is usually conducted at a major university or specialized health institute where there is strict adherence to ethical and moral considerations.

Some of the testing involves inhalation exposure of subjects to low levels of irritants, such as ammonia, formaldehyde, or chlorine, to determine the levels of upper respiratory tract irritation. Subjects are placed in large chamber rooms that are continuously monitored for concentration levels. The subjects spend a designated time in the room, are examined before and after the exposure, and are biomonitored using analysis of the blood, urine, and breath. Other types of materials that have been tested are solvents for symptoms of narcosis and other CNS effects. In one controlled university study conducted on carbon monoxide (CO), the air levels of CO were compared with the subjects' carboxyhemoglobin levels to determine a safe threshold limit value (TLV). This work was conducted some time ago using graduate students as subjects. As a result, the TLV was reduced from 100 ppm to 50 ppm (present TLV for CO is 25 ppm).

Skin patch tests are also conducted on humans after adequate animal testing has been completed. For example, chemicals that may have a sensitizing capability in guinea pigs can also be tested for skin sensitization in human subjects. Other primary irritants are tested in the same manner under carefully controlled conditions.

Another type of human evaluation of occupational exposures to hazardous substances is the epidemiological study. These studies involve the evaluation of morbidity and mortality statistics from existing populations. For example, periodic medical monitoring of employees in plant populations is conducted to identify clinical trends (such as liver enzyme elevations) that can be compared with industrial hygiene-monitoring data. These correlations of air-monitoring data with medical-monitoring or biomonitoring data can determine if the hazardous substance causes potential adverse health effects. In addition, mortality studies can be conducted on employees linking the cause of death with potential occupational exposures. Epidemiological investigations must be conducted by expert epidemiologists under specific conditions, with appropriate, matched control populations.

D. Extrapolation and Correlation of Animal Data

From the various toxicological investigations, the toxicologist must extrapolate and correlate the data for assessing human exposures. For example, information from animal studies is extrapolated to predict a response in humans. Sometimes, it is difficult to elicit the same response in humans if the selected animal species is not a suitable model for determining that effect. From a practical standpoint, rodents have routinely been used in initial toxicological investigations to obtain some general toxicity information. Here, large numbers of animals are used to screen chemicals before more detailed studies are conducted on larger mammals, for example, dogs and monkeys, for determining the desired effect. For noncarcinogens, various uncertainty factors are employed to establish an estimated risk assessment.

Target tissue dose is not always directly related to the amount of chemical administered because of absorption, distribution, metabolism, and elimination processes. Target tissue dose is often complexly related to exposure concentration or administered dose. Conventional pharmacokinetic models have been of great use in examining the consequences of nonlinear processes on tissue dosimetry, but have been of less value in extrapolating beyond the immediate test situation in the experimental animal. In physiologically based pharmacokinetic (PB-PK) models, compartments correspond to specific organs or tissue groups, realistically described in terms of their physiological characteristics and pertinent pathways for chemical metabolism and disposition. These PB-PK models are readily amenable to high-dose to low-dose, dose-route, interspecies, and exposure scenario extrapolations of tissue dosimetry. Because of their ease of extrapolation, these physiological approaches are playing an increasingly important role in toxicology research and chemical risk assessment.

Certain animal models are used for specific testing to closely mimic the human response. If, for example, the toxic response is immunological, then the animal model of choice may be guinea pigs or swine, to better predict the human response. In extrapolating this information, it is, therefore, important to use the most appropriate animal model. Low-dose extrapolations on carcinogens are determined from high-dose studies to conduct risk assessments. This concept is always a source of constant concern for the toxicologist when some animals do not exhibit the same response as humans.

In general, materials that are highly toxic to animals are also highly toxic to humans and, conversely, materials of low toxicity to animals are generally innocuous to humans. There are exceptions to these generalizations and, occasionally, new information is encountered that was not predicted or derived from animal data. Individual susceptibility may vary within and between species, depending on the individual reaction to the substance. In some of these cases, extrapolation cannot be made from animal data and, therefore, human experiences must be relied on to determine the true human response. An example is the teratogenic effects in humans associated with the use of thalidomide.

Currently, there is a strong movement to reduce the number of animals being used for testing. Many animal rights organizations have demonstrated that much of the animal testing conducted today is not needed. This concern is justified because, occasionally, we can accurately predict the acute effects of these toxic substances without animal data. Toxicologists have recognized this fact and alternatives to animal testing are under development. The use of in vitro test systems, such as cellular and tissue preparations, are constantly being explored to replace many of the screening methods requiring the use of live animals. On the other hand, the use of some animal studies are the only means of obtaining the accurate and specific data for a substance and its potential for causing those same effects in humans. Therefore, there is a need to assess the testing objectives and available methodologies to accurately predict the desired response. Some organizations, such as the Chemical Industry Institute of Toxicology (CIIT), are constantly looking at the toxicological-testing methods and their alternatives for developing data for conducting risk assessments on various chemical substances.

IV. CHEMICAL HAZARD REVIEW

To review the basic toxicology of hazardous chemical substances, some general categories of chemicals such as gases, solvents, metals, and dusts can be discussed.

A. Gases

1. Simple Asphyxiants

Several gases and vapors, when present in high concentrations in the atmosphere, act primarily as simple asphyxiants, without other significant toxicity or physiological effects. A TLV may not be recommended for each simple asphyxiant because the limiting factor is the available oxygen. The minimal oxygen content required by OSHA is 19.5% by volume under normal atmospheric pressure. Atmospheres deficient in oxygen do not provide adequate warning and most simple asphyxiants are odorless. Several asphyxiants also present explosion hazards.

Some examples of simple asphyxiants are

Acetylene
Ethane
Ethylene
Helium
Hydrogen
Methane
Nitrogen
Propane

2. Upper Respiratory Irritants

This general category of chemicals causes irritation of the upper respiratory tract. These irritant gases are soluble in the mucous lining of the tract and irritate the nerve endings innervating these structures. Because of this irritation, these substances have good warning properties and are readily detected.

Some examples of these upper respiratory irritants are

Acetaldehyde
Acetic anhydride
Ammonia
Formaldehyde
Phthalic anhydride
Sulfur dioxide

The concentrations causing this irritation vary from chemical to chemical and, at high concentrations, may cause more serious pulmonary damage if the gases reach the alveoli. The typical responses begin with a mild tingling sensation in the eyes, nose, and throat. This discomfort can increase rapidly, causing eye lacrimation and burning in the nose and throat. At higher concentrations, serious inflammation of the bronchi and lower respiratory tract can occur.

Most persons can detect these gases by odor at low concentrations before the irritation occurs. Persons working in this type of environment can detect these gases because of their good warning properties and normally do not remain in the area without some form of respiratory protection. Sometimes, workers become "inured" or more tolerant to these gases over a period during exposure. This situation is dangerous because the nerve endings have become "immune" to the warning properties, and the respiratory defense mechanisms may be impeded. The respiratory tract cilia may be damaged by higher and prolonged concentrations of an irritant gas, thereby allowing other exposed materials to be inhaled deeper into the lungs. An example of this situation is the combined exposure to formaldehyde vapors and paraformaldehyde powders. Formaldehyde vapors cause irritation and decrease ciliary action, whereas the insoluble paraformaldehyde powders can usually bypass the ciliary defense mechanisms and can be deposited deeper into the lungs, causing alveolar damage. Smoking acts in the same manner by reducing the defense mechanisms, allowing chemical exposure to damage the lungs.

The irritation potential of formaldehyde is well known. Since formaldehyde is a high-volume commodity chemical, chronic animal studies have been conducted. In a 2-year inhalation study, rats and mice were exposed to airborne concentrations of 2, 6, and 15 ppm. Nasal carcinomas were reported in the rats at 15 ppm. Formaldehyde is now classified as an animal carcinogen and a respiratory irritant. Epidemiological studies have yet to confirm nasal cancer in exposed human populations.

3. Pulmonary Edema Gases

Several gases, such as chlorine, ozone, hydrogen sulfide, nitrogen dioxide, and phosgene, have the ability to reach the lung alveoli, where they damage the alveolar–capillary membrane. This increase in membrane permeability allows plasma fluid to flow from the capillaries into the alveoli, resulting in pulmonary edema.

A more in-depth review of one of these gases can be given as an example. Exposure to phosgene gas results in pulmonary edema. About 70% of the production of phosgene is used in the manufacture of isocyanates. Phosgene is only partially soluble in water and, therefore, passes through the upper respiratory tract almost unnoticed, to be deposited in the alveoli. It is later hydrolyzed there, causing damage to the respiratory membrane. Phosgene, which smells like freshly cut grass, does not have particularly good warning properties. Since the permissible exposure limit (PEL) is 0.1 ppm time-weighted average (TWA), and the odor threshold for most people is 0.5 ppm, a person is usually overexposed if it is detected by odor. Following an overexposure, a person may not initially feel particularly ill, perhaps experiencing only a sore throat with some irritation. After several hours, the person may exhibit complete pulmonary distress after the phosgene has reacted in the lungs. Acute pulmonary edema then leads to shock and eventual death if the exposure has been high enough. The phosgene LCT_{50} for humans is 500 ppm-min. Many believe that once a person has received a significant exposure, nothing can be done to reverse the fatal outcome.

Exposure to phosgene is very serious, especially because of the insidious nature of the material. It is extremely important to assess the exposure to determine the extent of the potential injury. Direct-reading passive dosimeters are used by employees to monitor these exposures. In addition, biomedical research has been conducted by phosgene manufacturers to develop a treatment management procedure.

4. Other Selected Gases

(*a*) *Hydrogen cyanide.* Hydrogen cyanide, used in the synthesis of acrylonitrile, can cause pulmonary difficulties upon overexposure. The PEL is 10 ppm TWA with a skin notation. Once absorbed, the cyanide inhibits the cytochrome oxidase enzyme system which renders cells incapable of using oxygen. A specific two-step antidote treatment procedure is available for acute exposures.

(*b*) *Carbon monoxide.* Of all the gases toxic to humans, carbon monoxide (CO) is one of the most widely encountered. It exerts its effect on the body by combining with hemoglobin of the blood, forming carboxyhemoglobin, which interrupts the normal oxygen supply to the body tissues. Exposure to CO in industry can occur whenever carbonaceous matter is burned with incomplete combustion. Cases of chemical asphyxiation have occurred from various sources of carbon monoxide in industrial plants.

The more common symptoms following the inhalation of CO are primarily those associated with tissue hypoxia, which is caused by the inability of the blood to carry sufficient oxygen. Since the most sensitive organs to oxygen deprivation are the brain and heart, the symptoms in general reflect effects on these tissues.

Carbon monoxide is absorbed through the lungs, from which it enters the bloodstream. In treating a person with carbon monoxide exposure, the individual can eliminate about one-half the CO in 4 h by breathing fresh air alone. Elimination is increased with controlled application of pure oxygen and oxygen with carbon dioxide.

(*c*) *Vinyl chloride.* The toxicity information on vinyl chloride (VC) revolutionized the occupational health field when it was discovered that VC caused a specific form of liver cancer, called angiosarcoma. For many years, vinyl chloride was considered to be low in toxicity and was used in a variety of applications, such as a gas anesthetic and aerosol propellant. From animal studies, conducted by Maltoni, and from epidemiological studies at the United States rubber companies, it was confirmed that exposures to VC caused this specific cancer of the liver. When the results of both of these investigations became known, OSHA issued its first complete carcinogen standard requiring that exposures be maintained below 1 ppm TWA, with an action level of 0.5 ppm. Other provisions of the standard require the establishment of restricted areas, medical surveillance, industrial hygiene monitoring, and other requirements.

(*d*) *Chlorofluorocarbons.* Chlorofluorocarbons (CFCs) have received much attention today relative to potential depletion of the atmospheric ozone layer, and they are being phased out of many industrial operations. From a toxicological standpoint, it has been known for many years that CFCs have the capability, under certain conditions, to cause "cardiac sensitization," in which the chemical sensitizes the heart to endogenous epinephrine. The result is cardiac arrhythmias caused by abnormal conduction of the electrical impulse through the heart. These arrhythmias can be very severe and sometimes result in ventricular fibrillation, the same condition experienced in electrocution.

(*e*) *Ethylene oxide*. Ethylene oxide (EtO) is a hazardous chemical substance that has a variety of uses industrially. It is the major reactant in ethylene glycol (antifreeze) production, a raw material for various other chemicals, such as polyols (polyethers), and a cold-gas sterilant in hospitals. Besides, its well-known potential explosion hazard, important in process safety considerations, EtO also has some toxicological aspects that have been recently reported. Since EtO is a high-volume building-block chemical that is used to make other chemicals, the producers of EtO sponsored an industry-wide chronic inhalation study. This inhalation exposure study was conducted on groups of Fisher 344 rats exposed to 10, 33, and 100 ppm for 6 h/day, 5 days/week for 2 years. The study resulted in the development of leukemia and mesothelioma in rats, leading many producers to lower their internal PEL for EtO. This information was eventually used by OSHA to establish a 1 ppm TWA with an action level of 0.5 ppm. Although leukemia has not been associated with human exposures, these animal toxicological results have alerted industry to handle EtO much more carefully and to reduce worker exposures.

B. Industrial Solvents

There are approximately 250 solvents used in industry today, 50 of which are more commonly used. Solvents are substances used to dissolve other materials. The two basic types of solvents are aqueous and organic. Aqueous solvents contain a water base and generally have low vapor pressures, resulting in minimal inhalation potential. The main exposure problem from the water-based solvents is dermatitis. Organic solvents possess higher vapor pressures that can result in inhalation exposures. In general, organic solvents affect the central nervous system (CNS), causing depression and anesthetic-like symptoms. Other effects include contact dermatitis, skin sensitization, and peripheral nervous system injury. Overexposures to these substances create a broad range of symptoms, depending on the material, its concentration, and length of exposure.

1. Hydrocarbons

(*a*) *Aliphatic mixtures*. Aliphatic mixtures are straight-chain structures derived almost exclusively from petroleum products, often categorized by flash point as class I, II, or III liquids. Class I liquids (ether and naphtha, gasoline, heptane, and octane) have flash points under 37.8°C (100°F), and exhibit CNS effects from headache and dizziness, to depression, coma, and possible cardiac arrhythmias. They can also cause primary skin irritation and defatting of the skin. Class II and III liquids have flash points greater than 37.8°C (100°F). Some examples of these classes are kerosene, Stoddard solvent, mineral spirits and lubricating oils, including cutting oils. Health problems associated with these solvents are dermatitis and some inhalation hazards from mists and aspiration from vomiting ingested material.

2. Aromatics

(*a*) *Benzene, toluene, and xylene.* Benzene is used industrially as a solvent in a number of applications for fats, inks, oils, paints, plastics, rubber, dyes, and pharmaceuticals. The symptoms of acute overexposure to benzene include central and peripheral nervous effects, such as dizziness, weakness, headache, nausea, tremors, cardiac irregularities, and unconsciousness. Disturbances of the hematopoietic system (blood-forming system), including aplastic anemia and leukemia, are the main health concerns associated with chronic overexposure. Toluene and xylene are also used as common solvents and, on occasion, as substitutes for benzene. The chronic health effects of toluene and xylene involve target organs, such as the liver and those of male reproductive function.

3. Chlorinated Hydrocarbons

The chlorinated hydrocarbons are a large class of industrial solvents that have various health concerns associated with them.

(*a*) *Methane series.* Methyl chloride, methylene chloride, chloroform, and carbon tetrachloride are some examples of this class. All of these examples are associated with CNS depression, some liver and kidney target organ effects, including evidence of animal carcinogenicity. One interesting effect of methylene chloride is that it is metabolized to carbon monoxide, resulting in increased levels of carboxyhemoglobin in the blood.

(*b*) *Ethane series.* The ethane series of solvents include chemicals such as ethylene dichloride, methyl chloroform, trichloroethylene, and tetrachloroethylene. These substances can cause CNS depression and cardiac arrhythmias as well as liver and kidney injury. Methyl chloroform, or 1,1,1-trichloroethane, also may contain small amounts of 1,4-dioxane as a stabilizer. Therefore, the toxicity of dioxane and possible synergistic effects must be considered when addressing the toxicity of methyl chloroform. Trichloroethylene (TCE), a common metal degreaser, has caused cardiac sensitization (arrhythmias) and degreasers flush syndrome (dermal response to TCE and alcohol). Many of these substances have demonstrated some carcinogenic potential in long-term animal bioassays.

4. Alcohols, Glycols, and Derivatives

(*a*) *Alcohols.* Alcohols, such as methanol and ethanol, are also used industrially as solvents. Methanol irritates the mucous membranes and causes CNS effects from inhalation, GI tract irritation, and blindness from ingestion.

(*b*) *Glycols and derivatives.* Ethylene glycol, methyl cellosolve, and 1,4-dioxane are some examples of the general glycol family. Ethylene glycol, used in antifreeze, hydraulic fluids, and as a general solvent, causes CNS effects and kidney damage. Ethylene glycol is more toxic to humans than to some animals when ingested. A number of accidental poisonings are attributed to ethylene glycol ingestion each year. Methyl cellosolve, a solvent for resins, lacquers, paints, varnishes, and dyes, has been reported to cause CNS depression, kidney damage, and anemia. 1,4-Dioxane causes irritation of the eyes, nose, and throat; CNS depression and liver and kidney damage; and has been shown to induce tumors in experimental animals.

5. Esters

In general, esters are used in plastics, plasticizers, flame retardants, flavors, and fragrances. Some examples of esters are acetates, sulfates, phthalates, and phosphates. As a group, they cause CNS depression, primary skin irritation, upper respiratory tract irritation, and lacrimation. Phthalate esters account for most plasticizers, since they are added to high molecular weight polymers to impart flexibility and toughness to the final product. Some animal carcinogenicity and environmental concerns have been associated with materials such as di(2-ethylhexyl) phthalate (DEHP). Phthalate esters have been the subject of a Toxic Substances Control Act (TSCA) Section 4 testing rule, which will be covered later in the chapter.

6. Ethers

Ethers are colorless, volatile liquids used as general solvents. Like ethyl ether, which was one of the first successful general anesthetics, they also exhibit CNS effects. These materials are also highly flammable. Bis(chloromethyl) ether (BCME) is used as a solvent in manufacturing polymers. Exposures occur from inhalation and absorption through the skin. It is a known human lung carcinogen; disease can develop following 10-to-15-years exposure. Animal inhalation studies have also indicated lung, skin, and brain cancer associated with BCME exposures.

7. Ketones

Ketones belong to a class of many low-cost solvents for lacquers, oils, pigments, and dyes. Acetone, methyl ethyl ketone (MEK), and methyl isobutyl ketone (MIBK) are some more common ketones used industrially. They cause symptoms of CNS effects, dermatitis, and irritation of the eyes, nose, and throat.

8. Aromatic Amino and Nitro Compounds

Some examples of aromatic amino compounds are aniline, benzidine, and β-naphthylamine. Aniline can be inhaled and absorbed through the skin. It produces methemoglobinemia, resulting in cyanosis or reduction of the red blood cell's ability to carry oxygen. Benzidine and β-naphthylamine were used in dyestuff manufacturing in the past and are associated with bladder cancer in humans. Some of the aromatic nitro compounds, such as dinitrobenzene and dinitrophenol, have also caused methemoglobinemia, resulting in cyanosis. Probably the major route of absorption of these materials is through the skin. They also cause dermatitis and damage to the liver and kidneys.

9. Polymers, Plastics, and Resins

Polymers are macromolecules composed of a number of monomers. Their toxicity may vary, but it is dependent on any release of specific monomers. For example, the concern of polyvinyl chloride (PVC) is the potential exposure to vinyl chloride monomer. Resins are high molecular weight polymers of amines and aldehydes. Urea formaldehyde, for example, is used in adhesives, plywood glue and, at one time, urea formaldehyde foam insulation (UFFI). Dermatitis is one of the main health problems along with other toxicity associated with the individual ingredients. Plastic materials consist of polymers with additives such as colorants, plasticizers, and flame retardants.

Plastics are either thermosetting (polyurethane) or thermoplastic (polyethylene, polystyrene). Polyurethanes are produced from a reaction of a polyol with an isocyanate and are used to make rigid and flexible foams. The toxicity-associated overexposures to isocyanates and polyurethane dusts result in lung irritation and sensitization.

10. Isocyanates

The isocyanates with the highest production volumes are toluene diisocyanate (TDI) and methylene bisphenyl isocyanate (MDI). Isocyanates are used in polyurethanes, paints, herbicides, and other materials. Symptoms of overexposure include upper respiratory tract irritation and pulmonary sensitization in hypersensitive individuals. A small percentage of the workforce may become sensitized to these chemicals and exhibit an asthmatic reaction, in which the bronchial airway diameter is reduced. Once an individual is sensitized to an isocyanate, permanent removal from exposure to all isocyanates is necessary. Industry, through trade associations, is conducting research on the health effects of these substances.

Methyl isocyanate was the chemical involved in the tragic deaths of thousands of people in the community of Bhopal, India. Besides pulmonary edema, severe eye damage was also experienced in the exposed population.

C. Metals

Many metals are essential trace elements in the body, and some are used in pharmaceutical preparations. These metals and others, however, are also hazardous in the working environment when exposures are above the safe limits. Many of these metals are used in industrial operations as raw materials in the process or, occasionally, as catalysts. This brief review of selected metals should provide the reader with a good basic understanding of some toxicological considerations with metals. Metal exposures are monitored by air sampling and biological monitoring of blood and urine. When therapy is required, chelating agents, such as edetic acid (ethylenediaminetetracetic acid; EDTA) are used to chelate the metals and allow them to be excreted. Chelation therapy must be administered and controlled by medical personnel and cannot be used prophylactically to reduce worker exposures.

1. Antimony

Antimony is used in alloys, storage battery grids, pewter, rubber, matches, paints, and fire retardants. Antimony contains some arsenic as an impurity. The toxicity associated with antimony consists of upper respiratory tract irritation, pneumonitis, dermatitis, and lung cancer in experimental animals. Antimony may also generate stibine gas (antimony hydride) that causes acute hemolytic anemia.

2. Beryllium

Beryllium is used as a lightweight alloy in various aircraft applications and other uses in propellants and fluorescent lamps. Overexposures may result in contact dermatitis, sensitization, and a pulmonary fibrotic condition, termed berrylliosis. In animals, bronchogenic carcinomas have been reported following inhalation exposures.

3. Cadmium

Cadmium is used in applications such as electroplating, pigments, and alloys. It mainly affects the lungs and kidneys following inhalation of the metal, metallic salts, or cadmium oxide fume. In the lungs, the essential lesion is an emphysema-like reaction that leads to alveolar septum breakdown, air-trapping, and general obstructive pulmonary disease. In the kidneys, there are degenerative changes in the glomerulus and tubules as well as diffuse interstitial fibrosis, which could lead to renal failure. There is also sufficient evidence for the carcinogenicity of cadmium and cadmium compounds in animals. The evidence of carcinogenicity in humans is limited. One interesting result from ingesting cadmium-contaminated food in Japan resulted in older women developing bone and joint disorders. Cadmium displaces calcium in the bones, resulting in a disease called "itai-itai" (ouch-ouch) disease.

4. Chromium

Chromium is used in applications such as plating, paints, wood preservatives, and in photographics. The exposures most commonly encountered are acid mists, chrome powders, and zinc chromate paint. The major problems associated with chromium are dermatitis, perforation of the nasal septum, and pulmonary disorders. Certain chromates have been attributed to cause forms of respiratory cancer.

5. Cobalt

Cobalt is used to manufacture alloys, china, and glass (cobalt "blue" glass) and tungsten-carbide cutting tools. Its major health effects on the lungs, skin, blood, and heart have been associated with exposures in the tungsten-carbide industry. In the lungs, cobalt metal inhalation exposures have resulted in various respiratory diseases, such as bronchial asthma and interstitial fibrosis. Dermatitis and sensitization reactions of the skin have resulted from dermal contact. Polycythemia, an increase in red blood cells, has also been associated with cobalt exposures. Cardiomyopathy has been associated with cobalt used to stabilize beer, leading to the term, "Quebec beer drinkers disease," from an incidence of cases in Quebec, Canada. However, there have been no known heart effects associated with industrial exposures.

6. Copper

Copper, an essential trace element, is used in a variety of applications owing to its conductivity, maleability, and durability. It is one of the metals that cause "brass chills" or metal fume fever, which mimics a case of the flu.

7. Iron

Iron is also an essential trace element in the body and is used industrially in structural materials. Inhalation exposure to iron oxide has led to a benign lung disease, called siderosis.

8. Lead

Lead has a variety of industrial uses in the manufacturing of pipe and roof coverings, storage batteries, paints and pigments, pottery and glazed tiles, and insecticides. The routes of exposure are primarily inhalation and ingestion of lead and lead compounds. Cases of lead exposure can occur from inhaling lead powders and compounds in plant processes and from ingestion of lead when, for example, roofers put lead-coated nails in their mouths. The major toxic effects of lead are nervous system effects (CNS and peripheral), anemia, gastrointestinal irritation, and kidney and reproductive organ effects.

The CNS effects are collectively called "encephalopathy," which is a general term for degeneration of the brain. This condition may manifest itself in the form of hyperkinetic behavior, to permanent mental retardation and severe brain damage. The peripheral nervous system is also affected in the form of paralysis of the hands and feet. Since lead inhibits the synthesis of heme in a number of biochemical pathway steps, it reduces the red blood cell count, resulting in anemia. A lead line (Burtonian line) can develop on the gums when lead sulfides are formed. Premature loss of teeth can occur because lead displaces calcium in the bones. The GI system can be irritated when lead salts are ingested and cause an acute appendicitis called "lead colic." Other target organs affected are the kidneys and reproductive system. Biological monitoring of blood lead levels and zinc protoporphyrin should be conducted as required by the OSHA Lead Standard.

9. Mercury

Mercury is used in such applications as the metallic liquid in scientific instruments and mercury vapor lamp and mercury compounds in paint, pharmaceuticals, explosives, and in the carrotting of furs. The route of exposure is primarily inhalation of mercury vapor or compounds. Some of its toxicity is similar to that of lead, in that the nervous system, kidneys, and reproductive systems are affected. The CNS effects are collectively called "erethism," which is a peculiar form of psychic disturbances beginning with irritability and progressing to intellectual deterioration. The peripheral nervous system is also affected, resulting in tremors. Premature loosening of the teeth can also occur from continued exposures. The glomeruli and renal tubules of the kidneys may be damaged as well as reproductive organs. Exposure to organic mercury has demonstrated even higher toxicity in some cases. Mercury-contaminated water streams and lakes have formed alkyl mercury in the food chain, such as in fish and other aquatic forms, along with plants. A major poisoning occurred in one area of Japan when mercury waste from industrial plants contaminated rice fields. People ingesting the contaminated rice developed various abnormalities; teratogenic effects were also reported.

10. Nickel

Nickel is used in alloys, steel, electroplating, and as a catalyst in some applications. Nickel causes occupational health problems from exposures to the metal, its salts, and nickel carbonyl in refining operations. The effects are primarily on the skin and lungs. A dermatitis called "nickel itch" is the result of sensitized individuals contacting nickel and its compounds. Exposure to nickel carbonyl in the refining process has resulted in reports of nasal and lung cancer.

11. Vanadium

Vanadium has a number of uses, one of which is the use of vanadium pentoxide as a catalyst that must be reconditioned or changed on a periodic basis, resulting in plant exposures. The toxicity related to vanadium is irritation of the skin, eyes, gastrointestinal tract, and respiratory tract.

12. Zinc

Zinc is used in galvanized iron, paint, rubber, glazes, fungicides, wood preservatives, and topic astringents. Freshly formed zinc oxide fumes flocculate in air and can be inhaled. The exposure results in "metal fume fever," more frequently encountered on Mondays after a weekend off; it resembles a flu-like episode. Other zinc compounds also cause dermatitis.

D. Dusts

There are a variety of materials that are classified from a toxicological standpoint as dusts, causing various types and degrees of pneumoconioses or "dust retained in the lungs." Some dusts, such as silica and asbestos, are biologically active from a toxicological standpoint, whereas others are considered inert, but are retained in the lungs in moderate concentrations that should be monitored.

Dusts, in general, are generated by handling, crushing, grinding, or other physical manipulations. Particle size distribution is critical in determining the ability of a dust to be inhaled, deposited, and retained in the lungs. Generally, particles in the range of 0.2–5 μm are considerd to be respirable. Once in the lungs, the biological activity of the dusts at various concentrations determines the toxicity.

1. Silica

Silica is encountered in foundries and wherever sandstone grinding, sandblasting, pottery manufacturing, and like processes take place. The health hazard associated with exposure to crystalline free silica in the form of quartz and cristobalite is pulmonary fibrosis, called silicosis. Silicosis is a restrictive pulmonary disease that is usually irreversible when exposures are severe. Massive conglomerate silicosis is an accumulation of silicotic nodules that make the lungs stiff and noncompliant, leading to this pulmonary restrictive disease.

2. Asbestos

Exposures to asbestos fibers occur from the different uses of asbestos. These include construction materials, such as insulation, brake and clutch linings, textiles, paper and paints, to list a few. Asbestos exposures can lead to various occupational health effects, mainly centered on the lungs. Certainly when asbestos insulation is removed, extreme care should be taken to reduce possible exposures.

Two important considerations concerning asbestos are the fiber size (longer than 5 μm, with a 3:1 aspect ratio of length to diameter) and the specific form of asbestos. The three types of asbestos are crysotile, crocidolite, and amosite. The main health problems are asbestosis (fibrosis), pleural mesothelioma, bronchogenic carcinoma, and cancer of the GI tract. Smoking enhances the effects of asbestos; there is much higher incidence of lung cancer among smokers exposed to asbestos than among nonsmokers so exposed.

(*a*) *Other fibers.* Other man-made fibers, such as fiberglass and carbon fibers, which are not considered to be as hazardous as asbestos, can also elicit a fibrogenic response in contact with the pulmonary structures. As new information is developed on man-made fibers, it must be taken into consideration when substituting these materials.

3. Coal Dust

Coal dust exposures, such as to anthracite, lead to a pulmonary condition called coal workers pneumoconiosis, commonly referred to as "black lung." In this condition, coal dust particles smaller than 5 μm accumulate in the lungs and can create a fibrotic or emphysema-like reaction.

4. Metal Dusts

Many of the metals, already discussed, can be classified as pneumoconiosis-producing materials, since they can lead to various forms of fibrosis in the lungs. Some examples not previously mentioned are aluminosis (aluminum), baritosis (barium), and hard metal disease (tungsten carbide) that can lead to the conditions mentioned.

V. APPLICATIONS OF TOXICOLOGICAL DATA

There are numerous applications of industrial toxicological data useful to professionals involved in manufacturing operations. From the toxicological-testing evaluations, extrapolation and correlation of these findings can be applied to humans and potential human exposures. Some of the applications briefly discussed here involve reference materials, emergency information, occupational exposure limits, and environmental regulations. Other applications, such as risk assessment and product safety, will be reviewed later in this chapter.

A. Reference Material

The toxicological data obtained from testing evaluations is useful in many practical applications. Currently, there are reference sources available in texts, journals, and computerized database sources. Two of the more common reference sources of this information that engineers can readily obtain are material safety data sheets and container labels.

Material safety data sheets (MSDSs) have been used by chemical suppliers for many years. They were used originally as good business practice before they were required by the OSHA Hazard Communication Standard. The MSDSs are information sheets on chemical products that cover a number of topics: (1) manufacturer's identification information, (2) hazardous ingredients, (3) physical and chemical characteristics, (4) fire and explosion hazard data, (5) reactivity data, (6) health hazard data, (7) precautions for safe handling and use, and (8) control measures. Many companies have their own forms that are more extensive and cover additional important safety-, health-, environmental-, and transportation-related information on the product. This information is required for processors and manufacturers to communicate the appropriate safety and health data on hazardous materials to all employees. Chemical suppliers provide MSDSs to their customers as well as other interested persons who may need this information.

Labels consist of a hazard information sheet affixed to the chemical container. They utilize toxicological and other information from the MSDS and emphasize key words to highlight the precautionary text. The label is usually considered a condensed version of information on the MSDS.

Another key source of toxicological information is the *Registry of Toxic Effects of Chemical Substances* (RTECS), which is a registry of toxicological information for many toxic substances. It is published by the National Institute of Occupational Safety and Health (NIOSH) in compliance with the requirements of the Occupational Safety and Health Act of 1970. It is intended to provide basic information, on the known toxic effects of thousands of chemical substances, to those persons who need to know about them to assure their proper safe handling. The registry is a single-source document for basic toxicity information and for other data such as chemical identifiers and information necessary for the preparation of safety directives and hazard evaluations for chemical substances. The registry furnishes valuable information to a variety of professionals, including chemical engineers who need to identify the hazards of the chemicals used in their manufacturing processes. The RTECS file is available on computer tape to all subscribers to the National Library of Medicine (NLM) on-line services. The registry file has also been integrated into the Chemical Information System (CIS), which is a linked collection of computerized databases of chemical and toxicological information.

B. Emergency Information

Toxicological information is obviously necessary in emergency response situations for which the data must be readily available on short notice. These emergencies can take place on-site or off-site. Off-site emergencies usually occur in the transportation of the chemical substances from the supplier to customers, the usage in customer plants, and even during disposal. Some of the various sources of information already described are used for transportation purposes required by the Department of Transportation.

For on-site or in-plant emergencies, the toxicological information must be available to be able to handle any potential exposures from emissions, spills, accidents, and so on. Plant personnel must be constantly aware of the toxicological properties of the chemical substances they are handling day to day. This information is an integral part of the OSHA Hazard Communication Standard.

Another key application of toxicological information is the medical aspect. Before physicians can treat medical cases from chemical exposures, it is necessary to characterize the toxicity so that adequate and timely treatment can be administered. Once the chemical exposure is known, the physician can anticipate the expected symptoms and treat the patient. For example, the producers of phosgene have sponsored medical and toxicological research under the Chemical Manufacturers Association for many years. This research is centered around the toxicity of phosgene and its medical management. Symposiums have been held to relate this information to the medical community. When a person is brought to the hospital emergency room with a known phosgene gas exposure, the physician knows that the development of pulmonary edema is most likely and can treat the patient accordingly.

C. Occupational Exposure Limits

There are scientific organizations, such as the American Industrial Hygiene Association (AIHA), the National Institute for Occupational Safety and Health

(NIOSH), and the American Conference of Governmental Industrial Hygienists (ACGIH) who generate or use toxicological data in recommending occupational exposure limits. For example, there are ACGIH threshold limit values (TLVs), NIOSH recommended exposure limits (RELs), and AIHA workplace environmental exposure limits (WEELs). These scientific recommendations are then considered by government agencies, such as OSHA, who may incorporate them into the regulations. The background information for the ACGIH TLVs is found in the *Documentation for the TLVs* prepared by ACGIH. The OSHA permissible exposure limits (PELs) of hazardous substances have been adopted primarily from ACGIH TLVs and promulgated by OSHA to provide a safe and healthful work environment for all persons. A more thorough description of these exposure limits is described in the next chapter, but the basis for the recommendations are toxicological and epidemiological data.

D. Environmental Regulations

Federal, state, and local environmental agencies are using toxicological information to establish a framework for setting limits for environmental pollutants. The toxicological data can be used as a basis for air, water, and solid waste regulations. Without this important information, assumptions and safety factors must be incorporated into the regulatory process, leading to inaccurate estimates of risk for regulatory purposes.

VI. GOVERNMENT REGULATIONS

There are a number of government regulations involving toxicological aspects. Some of these regulations and governmental programs will be mentioned here to demonstrate the various requirements directly or indirectly involved with testing of chemical substances.

A. Toxic Substances Control Act

1. Background

The Toxic Substances Control Act (TSCA), which became effective on January 1, 1977, charges the EPA with the responsibility for regulating chemical substances "whose manufacture, processing, distribution in commerce, use, or disposal may present an unreasonable risk of injury to health or the environment" and, if necessary, for taking appropriate regulatory action to minimize any risks arising from these substances. The law encompasses the more than 60,000 chemical substances manufactured or imported for commercial purposes, as well as the thousands of substances now in various stages of research and development. Under this law, the term *chemical substance* means any organic or inorganic substance of a particular molecular identity, including any combination of such substances occurring in whole or in part as a result of a chemical reaction or occurring in nature as any element or uncombined radical. This term does not include certain mixtures, any registered pesticides, tobacco or tobacco products, nuclear material, food, food additives, drugs, or cosmetics. Most of these items are covered under other regulations.

The TSCA is based on the policy that chemicals should be tested, hazardous chemicals should be controlled, and innovation should not be unduly impeded. Along with this policy, the primary functions of EPA under TSCA are threefold: information gathering, regulation of existing risks, and proactive identification and prevention of future risks. The more pertinent TSCA sections to be discussed are Sections 4, 5, 6, 8, and 16.

2. Section 4: Testing

Section 4 of TSCA gives the EPA authority to require testing of existing chemicals if they find that they "may present" an unreasonable risk or injury to health or the environment, or if they will be produced in substantial quantities that will result in significant exposures. The other reasons EPA may require testing are if insufficient data are already available with which to perform a reasonable risk assessment, or if testing is necessary to provide such data. The EPA exercises this authority when industry fails to develop the needed data on its own. Testing is required after a rulemaking proceeding that includes opportunities for public comments and oral presentations at a hearing.

3. Section 5: Premanufacturing Notification

Section 5 of TSCA requires that manufacturers or importers of new chemicals (those not listed in the TSCA *Inventory of Chemical Substances*) give EPA a written 90-day advance notification of their intentions called a "Premanufacture Notification" (PMN). Chemicals produced in small quantities solely for experimental or research and development purposes are exempt from this rule. This report must also be submitted when the EPA designates the use of a chemical as a significant new use (even if already on the inventory list or is through premanufacture notification review), based on the consideration of several factors, such as the anticipated extent and type of exposures due to this new use. If there is a good reason, the 90-day period may be extended for an additional 90 days.

The PMN must include the identity of the chemical, its molecular structure, proposed use, production or importation volume, any potential byproducts, estimates of exposure, and any test data related to health and environmental effects of the chemical. The EPA may order that the manufacture or importation of the chemical be prohibited if it determines there is insufficient information in the PMN, until adequate data is given, although testing may not be required. After reviewing a PMN, if EPA determines that the chemical poses an unreasonable risk to health or the environment, its manufacture or importation can also be prohibited. Also, EPA will inform the submitter of steps that will reduce this risk.

4. Section 6: Controls

If the chemical poses an unreasonable risk to health and environment, Section 6 gives EPA authority to regulate its manufacture, processing, use, or disposal. The EPA can control chemicals by banning or limiting a chemical's production or use, requiring labeling, regulating methods of disposal, and specifying quality control procedures, to name a few.

5. Section 8: Reporting and Recordkeeping

Section 8 is composed of five important subsections involving reporting and retention of information.

(*a*) *Section 8(a): general reporting.* This subsection requires manufacturers to maintain records and make reports concerning the substances they produce, categories of use, any by-products involved, environmental and health effects, and the number of workers exposed. Manufacturers and processors must provide this information to the extent they know or can reasonably ascertain. Those who produce for the sole purpose of research and development, and relatively small manufacturers and processors, are exempt from this requirement.

(*b*) *Section 8(b): chemical inventory.* When the act was passed, this subsection required a manufacturer or importer to report the identity of each chemical made or imported into the United States for commercial use, the manufacturing site, and estimate the amount manufactured for the 1977 calendar year. The EPA compiled an inventory of chemicals from this information, and the agency uses this list to determine whether a chemical is considered "new" and subject to PMN rulings. In June 1986, EPA issued an Inventory Update Rule requiring those manufacturers and importers of certain chemicals to report current data on the production volume, plant site, and site-limited status of the substances.

(*c*) *Section 8(c): records of significant adverse reactions.* This section requires manufacturers, processors, and distributors to keep records of significant adverse reactions to health and environment alleged to have been caused by a chemical. The allegations may be made by employees, customers, neighbors, companies, or employee organizations. Employee allegations must be on file for 30 years, whereas the others are on file for 5 years.

(*d*) *Section 8(d): health and safety studies.* EPA requires all manufacturers, importers, or distributors to submit lists and copies of health and safety studies pertinent to a chemical. These include industrial hygiene surveys, studies of the physical and chemical properties used to evaluate environmental effects, and any studies used to measure or estimate workplace concentrations of a chemical.

(*e*) *Section 8(e): substantial risk reporting.* This section requires all manufacturers, processors, or distributors who obtain any information that reasonably supports the conclusion that a chemical presents a substantial risk to health or the environment to immediately inform EPA. Three categories of effects are potentially serious enough for reporting. These are human health effects, environmental effects, and emergency incidents of environmental contamination.

Human health effects include

a. Any instance of cancer, birth defects, mutagenicity, death, or serious or prolonged incapacitation, including the loss of normal bodily function
b. Any pattern of effects or evidence that reasonably supports the conclusion that the foregoing can occur

Environmental effects include

a. Widespread distribution in environmental media, excluding proper disposal facilities
b. Pronounced bioaccumulation (i.e., in fish)
c. Any nontrivial adverse effect in a pronounced degree or widespread in the environment
d. Ecologically significant changes in any species
e. Any unacceptable risk due to degradation in the environment

An emergency incident of environmental contamination is an event that will cause any of the foregoing effects because of the pattern, extent, and amount of contamination that will seriously threaten humans or nonhuman organisms with large-scale or ecologically significant population destruction. Examples are an accidental rupture of railroad tank cars containing hazardous chemicals or discovery of leakages of hazardous chemicals at a plant site.

6. Section 16: Enforcement Penalties

Section 16 gives EPA authority to issue civil penalties for each violation. The penalties are not to exceed 25,000 dollars for each violation, and each day a violation continues will constitute a separate violation. For willful violations of the act, criminal penalties can also be imposed as well as civil penalties.

B. Occupational Safety and Health Administration and the National Institute for Occupational Safety and Health

The Occupational Safety and Health Act was signed into law by President Richard Nixon in 1970, and became effective on April 28, 1971. Within the Department of Labor, the Occupational Safety and Health Administration (OSHA) was created to "assure as far as possible every working man or woman safe and healthful working conditions." This act will be addressed in more detail in the Industrial Hygiene section in Chapter 3.

The National Institute for Occupational Safety and Health (NIOSH) is the main federal agency responsible for conducting research to eliminate on-the-job hazards. It was established under the Occupational Safety and Health Act of 1970.

Administratively, NIOSH reports to the Centers for Disease Control (CDC) under the Department of Health and Human Services (DHHS). There are ten regional offices, with its headquarters in Atlanta, Georgia. The institute's main research laboratory is in Cincinnati, Ohio, where the effects of exposure to hazardous substances are evaluated. Located at another branch in Morgantown, West Virginia, is the NIOSH Testing and Certification Branch, which evaluates and certifies workers' personal protective equipment.

C. Other Governmental Regulations and Programs

1. Emergency Planning and Community Right-to-Know Act

On October 17, 1986, the Emergency Planning and Community Right-To-Know Act (EPCRA), originally called SARA Title III (Superfund Amendments and Reauthorization Act), was enacted into law. Title III established requirements for federal, state, and local governments and industry concerning emergency planning and community right-to-know reporting on hazardous and toxic chemicals. Subtitle A requires emergency planning and notification by industry under Sections 302 (Emergency Planning Notification), Section 303 (Designation of Facility Emergency Coordinator), and Section 304 (Emergency Release Notification). Subtitle B covers reporting requirements by industry that involve Section 311 (Material Safety Data Sheets or list submission), Section 312 (Hazardous Chemical Inventory Forms), and Section 313 (Toxic Release Inventory Forms and Supplier Notification). The EPCRA will help increase the public's knowledge and access to information on the presence of hazardous chemicals in their communities and releases of these chemicals into the environment.

2. Food and Drug Administration

The Food, Drug, and Cosmetic Act was passed in 1938 for the protection of food and drugs, and the FDA administration is now organized under the Department of Health and Human Services. The FDA has six major bureaus: (1) Drugs, (2) Foods, (3) Radiological Health, (4) Veterinary Medicine, (5) Biologics, and (6) Medical Devices.

Food-grade chemicals for both direct and indirect contact, require toxicological evaluations. Obviously, pharmaceuticals require stringent testing, including clinical trials. Plants that manufacture these types of products coming under FDA jurisdiction must also comply with the FDA Good Manufacturing Practices (GMPs). Anyone involved with this type of manufacturing needs to be aware of the FDA requirements.

3. Federal Insecticides, Fungicide, and Rodenticide Act

The Federal Insecticide, Fungicide, and Rodenticide Act (FIFRA), under EPA, regulates all pesticides used in the United States. These materials must undergo toxicological and other testing, looking for possible health and environmental effects, before they can be registered with the EPA.

4. National Toxicology Program

The National Toxicology Program (NTP) was established in 1978 within the Department of Health and Human Services (DHHS). This program combines three DHHS agencies: (1) National Institutes of Health (National Cancer Institute and National Institute and Environmental Health Services), (2) Food and Drug Administration (National Center for Toxicological Research), and (3) Centers for Disease Control (National Institute for Occupational Safety and Health). The primary goal of the National Toxicology Program is to determine the toxic effects of chemicals and develop testing methodology.

VII. RISK ASSESSMENT AND RISK MANAGEMENT

Risk assessment–risk management is the process used to evaluate and control risks associated with exposure to toxic substances. *Risk* is the probability that a substance will produce harm under certain conditions.

A. Risk Assessment

Risk assessment information from existing toxicology, epidemiology, environmental fate, and potential exposures are used to describe the likely health hazards to humans or the environment. The guidelines established by the EPA utilize a three-step process for their regulatory decisions and action—research, risk assessment, and risk management.

The research element of the process uses laboratory and field observations, toxicological studies, and field measurements. It begins with laboratory and field observations of adverse health effects and exposures to particular agents. This information is used as a basis later for making a hazard identification. From animal toxicological studies, information is extrapolated from high- to low-dose studies and from animals to humans. Field measurements to estimate and characterize the population exposures are the last step in the research process.

Following the research phases, the procedures of hazard identification, dose–response assessments, and exposure assessments are used to characterize the risk.

Hazard identification attempts to determine whether the agent causes an adverse effect using laboratory and field observations. From the hazard identification, a dose–response assessment is made from the toxicological investigations. Extrapolations and correlations are then made from the various tests for potential human consequences. Exposure assessments under different conditions are very critical in determining the total risk. The toxicity and potential exposures are then evaluated to characterize the risk.

B. Risk Management

From an industrial perspective, once a risk is properly assessed and characterized, it can be managed. Management of the risk may involve elimination in some cases or reducing the risk by various control measures. Risk management from a regulatory perspective involves development of regulatory options incorporating public health, economic, social, and political consequences of these regulatory options. From these options and evaluation of the risk characterization, a regulatory agency should be able to make accurate and reasonable regulatory decisions on managing the risk. These actions should result in realistic regulations with which the regulated community can comply and that the agency can enforce.

VIII. PRODUCT SAFETY AND PRODUCT STEWARDSHIP

A. Product Safety

The American chemical industry is concerned with the safety of the thousands of chemical substances in commerce today and their potential effects on its employees, its customers, and the environment. Product safety has been a major concern and effort for the chemical industry over the years and, currently, there is much more emphasis directed toward this area.

Laboratory testing to learn more about the toxicity and potential exposures has greatly expanded. Many highly sophisticated methods to test for a variety of possible health effects caused by exposure to chemicals are more readily available. This testing is done by companies in their own laboratories, contract facilities, universities, or private institutes, such as the Chemical Industry Institute of Toxicology, in Research Triangle Park, North Carolina. Studies are sponsored by individual companies or jointly sponsored studies under trade association groups consisting of member companies.

This research-testing effort will help the industry reevaluate the safety of many long-accepted chemical compounds. Regulations such as those under the Toxic Substances Control Act (TSCA) are designed to ensure that new and existing chemicals do not constitute an unreasonable risk. Together this product safety effort is focusing on developing toxicological information for safe handling of chemicals that is useful by all people involved with the product's life cycle: research, manufacturing, transportation, end-use, and disposal. This philosophy is the basis for product stewardship.

B. Product Stewardship

Product stewardship is a system for managing health, safety, and environmental risk throughout all stages of the product's life cycle: development through disposal. Various elements of product stewardship and its philosophy have been practiced by many companies for years. To formalize this program, the chemical industry has developed a consensus product stewardship program as part of the Chemical Manufacturers Association (CMA) "Responsible Care Program." Responsible Care, in general, is a commitment by the member companies of the CMA to continually improve performance in the areas of health, safety, and the environment. Codes of Management Practices are being developed for product stewardship, community awareness and emergency response, distribution, employee health and safety, process safety, and waste management and reduction.

The purpose of CMA's Product Stewardship Code of Management Practices is to make health, safety, and environmental protection an integral part of designing, manufacturing, distributing, using, recycling, and disposing of products. The scope of the code covers all stages of a product's life cycle. The Product Stewardship Code includes twelve management practices under management leadership and commitment, information, and characterization and risk management. These management practices are as follows:

1. Management Leadership and Commitment

(*a*) *Leadership*. Demonstrate senior management leadership through written policy, active participation, and communication.

(*b*) *Accountability and performance measurement*. Establish goals and responsibilities for implementing product stewardship throughout the organization.

(*c*) *Resources*. Commit resources necessary to implement product stewardship practices.

2. Information and Characterization

(*a*) *Health, safety, and environmental information*. Establish and maintain information on health, safety, and environmental hazards and on potential exposures from new and existing products.

(*b*) *Product risk characterizations*. Characterize new and existing products relative to their risk, using information about health, safety, and environmental hazards and potential exposure.

3. Risk Management

(*a*) *Risk management system*. Establish a system to identify, document, and implement health, safety, and environmental risk-management actions appropriate to the product risk.

(*b*) *Product and process design and improvement*. Establish and maintain a system that makes health, safety, and environmental effects—including energy and natural resources conservation—key considerations in designing and developing products and processes.

(*c*) *Employee education and product use feedback*. On the basis of job function, educate, and train employees in the proper handling, recycling, use, and disposal of products and known product uses.

(*d*) *Contract manufacturers*. Select contract manufacturers who employ appropriate practices for health, safety, and environmental protection for the operations under contract; or work with contract manufacturers to help them implement such practices.

(*e*) *Suppliers*. Require suppliers to provide appropriate health, safety, and environmental information and guidance on their products.

(*f*) *Distributors*. Provide health, safety, and environmental information to distributors. Commensurate with product risk, work with them to foster proper use, handling, recycling, and disposal, and the transmittal of appropriate information to downstream users.

(*g*) *Customers and other direct product receivers*. Provide health, safety, and environmental information to direct product receivers. Commensurate with product risk, work with them to foster proper use, handling, recycling, and disposal, and the transmittal of appropriate information to downstream users.

IX. SUMMARY

This chapter has introduced the plant chemical engineer and other plant personnel to some toxicological information that can be used for handling and managing toxic materials. In addition, some of the current applications of these toxicological principles have been presented, along with specialized topics involving government regulations, risk assessment, and product stewardship. This chapter also serves as a basis for a better understanding of the toxicity of some of the chemical substances and safeguards that are considered in the following chapters.

BIBLIOGRAPHY

American Conference of Governmental Industrial Hygienists (ACGIH), *Documentation of Threshold Limit Values*, 4th ed., ACGIH, Cincinnati, OH, 1980.

American Conference of Governmental Industrial Hygienists (ACGIH), *Threshold Limit Values for Chemical Substances and Physical Agents in the Workroom Environment with Intended Changes for 1978*, ACGIH, Cincinnati, OH, 1993–94.

B. Ames, J. McCann, and E. Yamasaki, Methods for detecting carcinogens and mutagens with the salmonella/mammalian microsome mutagenicity test, *Mutat. Res.* 31:347–364 (1975).

K. Anderson, and R. Scott, *Fundamentals of Industrial Toxicology*, Ann Arbor Science Publishers, Ann Arbor, MI, 1981.

D. J. Birmingham, Occupational dermatoses, *Patty's Industrial Hygiene and Toxicology*, Vol. 1, *General Principles*, 3rd ed. edited by (G. D. Clayton and F. E. Clayton, eds.), Wiley Interscience, New York, 1978.

D. J. Birmingham, ed., *The Prevention of Occupational Skin Diseases*, Soap and Detergent Association, New York, 1981.

E. Browning, *Toxicity of Industrial Metals*, Butterworths, London, 1969.

E. Browning, *Toxicity and Metabolism of Industrial Solvents*, Elsevier Publishing, New York, 1965.

E. J. Calabrese, *Principles of Animal Extrapolation*, John Wiley & Sons, New York, 1983.

G. D. Clayton, F. E. Clayton, L. J. Cralley, and L. V. Cralley, eds., *Patty's Industrial Hygiene and Toxicology*, 3rd ed., Vol. 1 (1978), 2A (1981), 2C (1982), 3 (1979), John Wiley & Sons, New York, 1978, 1981, 1982.

J. L. Creech, and H. M. Johnson, Angiosarcoma of the liver in the manufacture of polyvinylchloride, *J. Occup. Med.* 16:150–151 (1974).

W. B. Deichmann, and H. W. Gerarde, *Toxicology of Drugs and Chemicals*, New York, 1969.

J. H. Draize, G. Woodard, and H. O. Calvery, Methods for the study of irritation and toxicity of substances applied topically to the skin and mucous membranes, *J. Pharmacol. Exp. Ther.* 82:377–390 (1944).

R. H. Dreisbach, *Handbook of Poisoning: Prevention, Diagnosis and Treatment*, 11th ed., Lange Medical Publications, Los Altos, CA, 1983.

M. J. Ellenhorn, and D. G. Barceloux, *Medical Toxicology*, New York, 1988.

L. T. Fairhall, *Industrial Toxicology*, 2nd ed, Williams & Wilkins, Baltimore, 1969.

L. Fishbein, *Potential Industrial Carcinogens and Mutagens*, Elsevier Scientific Publishing, New York, 1979.

Fourth Annual Report on Carcinogens—Summary, DHHS/PHS Pub. NTP 85-002, U. S. Government Printing Office, Washington, DC, 1985.

E. D. Frohlich, *Pathophysiology*, Philadelphia, 1972.

H. W. Gerarde, *Toxicology and Biochemistry of Aromatic Hydrocarbons*, Elsevier Publishing, New York, 1960.

A. G. Gilman, *The Pharmacological Basis of Therapeutics*, 8th ed., Macmillan, New York, 1990.

M. N. Gleason, et al., *Clinical Toxicology of Commercial Products*, 5th ed., Williams & Wilkins, Baltimore, 1985.

W. M. Grant, *Toxicology of the Eye*, 2nd ed., Charles C. Thomas, Springfield, IL, 1974.

A. C. Guton, *Textbook of Medical Physiology*, Philadelphia, 1966.

A. Hamilton, and H. Hardy, in *Industrial Toxicology*, (A. J. Finkel, ed.), John Wright-Publishing Sciences Group, Boston, 1983.

W. J. Hayes, *Toxicology of Pesticides*, Williams & Wilkins, Baltimore, 1975.

A. W. Hayes, *Principles and Methods of Toxicology*, New York, 1984.

International Agency for Research on Cancer (IARC), *IARC Monographs on the Evaluation of the Carcinogenic Risk of Chemicals to Humans*, Vol. 19, *Some Monomers, Plastics and Synthetic Elastomers, and Acrolein*, IARC, Lynon, France, 1979. International Agency for Research on Cancer (IARC), *IARC Monographs on the Evaluation of the Carcinogenic Risk of Chemicals to Humans*, [*Suppl. 4*], IARC, Lyon, France, 1982.

R. T. Johnstone, and S. E. Miller, *Occupational Diseases and Industrial Medicine*, 1960 Books on Demand, University Microfilms, Ann Arbor, MI, 1960.

E. J. Kerfoot, *Chronic Animal Inhalation Toxicity to Cobalt*. U. S. Department of Health, Education and Welfare, Public Health Service, National Institute of Occupational Safety and Health. Research Report, Contract HSM 099-71-19, 1973.

E. Kerfoot, and E. Domeier, Pulmonary function measurements of large animals using the capacitance respirometer, *Lab. Anim. Sci.*, 22:854 (1972).

E. Kerfoot, W. Fredrick, and E. Domeier, Cobalt metal inhalation studies on miniature swine, *Am. Ind. Hyg. Assoc. J.*, 36:17 (1975).

E. Kerfoot, and T. Mooney, Formaldehyde and paraformaldehyde study in funeral homes, *Am. Ind. Hyg. Assoc. J.*, 36:533 (1975).

E. Kerfoot, M. Klosowski, D. Steinmetz, and J. Kovalic, A chemical company's compliance experience and outlook with the Toxic Substances Control Act, *Environ. Carcinog. Revs. J. Environ. Sci. Health.* C8:379–390 (1990–1991).

M. M. Key, et al., *Occupational Diseases: A Guide to Their Recognition*, rev. ed., DHHS (NIOSH) Publication 77-181, U. S. Department of Health, Education, and Welfare, Washington, DC, June 1977. (Order from NTIS, PB-83-129-528/A99).

G. Kimmerle, and A. Eben, Metabolism studies of *N,N*-dimethylformamide. I. Studies in rats and dogs, *Int. Arch. Arbeitsmed.*, 34:109–126 (1975). G. Kimmerle and A. Eben, Metabolism studies of *N,N*-dimethylformamide. II. Studies in persons, *Int. Arch. Arbeitsmed.* 14:127–136 (1975).

C. D. Klassen, M. O. Amdur, J. Doull, eds., *Casarett and Doull's Toxicology—The Basic Science of Poisons*, 3rd ed., Macmillan Publication, New York, 1986.

R. J. Kociba, S. B. McCollister, C. Park, R. T. Torkelson, and P. J. Gehring, 1,4-Dioxane I. Results of a 2-year ingestion study in rats, *Toxicol. Appl. Pharmacol.*, 30:275–286 (1974).

L. R. Leach, S. E. Reiss, E. J. Kerfoot, and P. L. Lubs, Occupational health survey: An evaluation of potential health hazards in the workplace, *Am. Ind. Hyg. Assoc. J.*, 42:160 (1981).

A. L. Linch, *Biological Monitoring for Industrial Chemical Exposure Control*, CRC Press, Cleveland, 1973.

J. T. Litchfield, and F. Wilcoxon, Simplified method of evaluating dose-effect experiments, *J. Pharmacol. Exp. Ther.*, 96:99–113 (1949).

T. A. Loomis, *Essentials of Toxicology*, 3rd ed., Lea & Febiger, Philadelphia, 1978.

P. L. Lubs, E. J. Kerfoot, and J. M. McClellan, What industrial hygienists should know about TSCA, *Am. Ind. Hyg. Assoc. J.*, 43:418 (1982).

P. T. Mackler, and J. Mead, eds., *Handbook of Physiology: Mechanics of Breathing*, Vol. 3, parts 1, 2, American Physiological Society, Bethesda, MD, 1968.

B. MacMahon, and T. F. Pugh, *Epidemiology Principles and Methods*, Little, Brown & Co., Boston, 1970.

R. Matherne, P. Lubs, and E. Kerfoot, The development of a passive dosimeter for immediate assessment of phosgene exposure, *Am. Ind. Hyg. Assoc. J.*, 42:681 (1981).

McKenna, Conner, and Cuneo, *TSCA Handbook*, 2nd ed., Government Institutes, Rockville, MD, 1989.

M. Mehlman, R. J. Fensterheim, and M. F. Frosolono, *Phosgene Induced Edema: Diagnosis and Therapeutic Countermeasures*, Princeton, NJ, 1985.

NIOSH/OSHA, *Occupational Health Guidelines for Chemical Hazards*, DHHS (NIOSH) Publication 81-123, U. S. Government Printing Office, Washington, DC, 1981.

National Institute for Occupational Safety and Health (NIOSH), *NIOSH Pocket Guide to Chemical Hazards*, NIOSH, Cincinnati, OH, June 1990.

National Institute for Occupational Safety and Health (NIOSH), *Criteria Documents for Recommended Standards*, see NIOSH Publication Catalog, 6th ed, DHHS (NIOSH) Publication 84-118, NIOSH, Cincinnati, OH, 1984. (Order from Publications Dissemination DSDTT, NIOSH).

National Institute for Occupational Safety & Health, *Registry of Toxic Effects of Chemical Substances* 1981–82, DHHS (NIOSH) Publication 83-107, U. S. Government Printing Office, Washington, DC, 1983. (Order from NTIS PB-81-154-478/A99.)

B. A. Polg, ed., *Fundamentals of Industrial Hygiene*, 3rd ed., National Safety Council, Chicago, IL, 1988.

Public Law 94-469, 1976, *Toxic Substances Control Act*. 15 USC 2601, 1976

N. I. Sax, and R. J. Lewis, *Hawley's Condensed Chemical Dictionary*, 11th ed., Van Nostrand Reinhold, New York, 1987.

L. Schwartz, L. Tulipan, and D. J. Birmingham, *Occupational Diseases of the Skin*, 3rd ed., Lea & Febiger, Philadelphia, 1957.

M. Sittig, *Handbook of Toxic and Hazardous Chemicals and Carcinogens*, 2nd ed., Noyes Publications, Park Ridge, NJ, 1985.

The Industrial Environment, Its Evaluation and Control, DHHS/NIOSH Publication 74-117. NIOSH, Rockville, MD. 1973. (Order from GPO, 017-001-00396-4.

The Merck Index, 10th ed., Merck & Co., Rahway, NJ, 1983.

H. C. Vogt, E. Kerfoot, and G. Ford, Design of a computerized chemical information file in response to the initial inventory requirement of TSCA, *Am. Ind. Hyg. Assoc. J.*, 41:642 (1980).

H. C. Vogt, and E.J. Kerfoot, Information reporting procedures under the toxic Substances Control Act (TSCA); Subsection 8(e), *J. Chem. Inform. Comput. Sci.*, 20:253 (1980).

J. A. Zapp, The toxicological basis of threshold limit values 3. Physiological criteria, *AIHA*, 20:350 (1959).

C. Zenz, ed., *Occupational Medicine—Principles and Practical Applications*, 2nd ed., Year Book Medical Publishers, Chicago, 1988.

3

Industrial Hygiene

Daniel C. Steinmetz, Thomas J. Ozimek, and Edward J. Kerfoot
BASF Corporation, Wyandotte, Michigan

Roger W. Bohl
The Dow Chemical Company, Midland, Michigan

I. INTRODUCTION

The traditional definition of *industrial hygiene* is the recognition, evaluation, and control of chemical, physical, and biological agents. In recent years, this definition has been expanded to include the anticipation of potential hazards. This anticipation phase is especially important to design and process engineers and occupational health professionals, since the control of hazardous agents is accomplished most efficiently and economically if incorporated into engineering plans from the inception of a project.

To anticipate hazards and effectively design the necessary controls into a process, industrial hygienists and toxicologists must be consulted. These professionals inform the engineer of the potential hazards of chemicals used in the process, acceptable airborne concentrations that have been established for those chemicals, and environmental information and regulations that may affect the project. The health professionals should be included in the earliest phases of any project to avoid the costly process of designing and retrofitting engineering controls into a complete or partially complete process. Often, the engineer is called on to design and implement changes in an existing process. Again, cooperation between the engineer and the appropriate health and safety professionals is critical to the success of the project.

A. The Industrial Hygienist

The industrial hygienist and toxicologist have been trained to recognize environmental and workplace hazards and stresses. Hazards may arise from overexposures to chemicals; to physical agents, such as noise and radiation; to biological agents; or to ergonomic stresses. Chapter 2 describes the toxicological properties of many chemicals, such as gases, solvents, metals, and mineral dusts.

To understand the level of hazard in an existing process, the industrial hygienist must use monitoring techniques to evaluate the exposures associated with the materials handled in the process. The results of such monitoring are then compared with established standards and, if necessary, used to recommend and develop corrective measures. These measures may include engineering controls, such as process substitution, isolation, enclosure, or ventilation; substitution of hazardous materials with less hazardous substances; or administrative controls to reduce exposure time. These and other methods will be discussed later in this chapter.

Most industrial hygienists have received undergraduate training in biology, chemistry, engineering, and other basic sciences. Usually, they have obtained graduate degrees in industrial hygiene or related fields, and many have been certified in industrial hygiene practice by certification boards. Graduate training in industrial hygiene includes study in toxicology, industrial hygiene chemistry, environmental monitoring techniques, control methodology, epidemiology, statistical analysis, ventilation, and radiation science.

Industrial hygiene departments of chemical and manufacturing companies often report through Health, Safety, and Environment (HS&E) or other similar organizations. These HS&E groups often include medical, toxicology, product safety, regulatory, environmental, and safety departments. The industrial hygienist often works in conjunction with these professionals and the appropriate manufacturing and engineering personnel to recommend changes or controls for existing processes or for new ones being designed. In some companies, HS&E and engineering may report through a single department or through manufacturing teams to create the opportunity to develop close working relations during process design.

B. Occupational Safety and Health Administration Regulations

In 1970, the U. S. Congress enacted the Williams–Steiger Occupational Health and Safety (OHS) Act of 1970, which became effective in April 1971. At that time, the Occupational Safety and Health Administration, commonly known as OSHA, was created. OSHA, which is organized under the Department of Labor, is responsible for carrying out the responsibilities assigned to the Secretary of Labor in the act.

Among other things, the act gives the Secretary of Labor and OSHA the authority to promulgate health and safety standards; to enforce the standards and issue citations; to conduct training for inspectors, employers, and employees; and to approve state plans for programs under the act. A summary of health-related OSHA regulations is included in Table 1.

Table 1 OSHA Health Related Standards

Subpart G: Occupational Health and Environmental Control	
1910.94	Ventilation
1910.95	Occupational noise exposure
1910.96	Ionizing radiation
1910.97	Nonionizing radiation
Subpart Z: Toxic and Hazardous Substances	
1910.1000	Air contaminants
1910.1001	Asbestos, tremolite, anthophyllite, and actinolite
1910.1002	Coal tar pitch volatiles; interpreation of term
1910.1003	4-Nitrobiphenyl
1910.1004	α-Naphthylamine
1910.1006	Methyl chloromethyl ether
1910.1007	3,3′-Dichlorobenzidine (and its salts)
1910.1008	Bis(chloromethyl) ether
1910.1009	β-Naphthylamine
1910.1010	Benzidine
1910.1011	4-Aminodiphenyl
1910.1012	Ethyleneimine
1910.1013	β-Propiolactone
1910.1014	2-Acetylaminofluorene
1910.1015	4-Dimethylaminoazobenzene
1910.1016	*N*-Nitrosodimethylamine
1910.1017	Vinyl chloride
1910.1018	Inorganic arsenic
1910.1025	Lead
1910.1027	Cadmium
1910.1028	Benzene
1910.1029	Coke Oven emissions
1910.1030	Blood-borne pathogens
1910.1043	Cotton dust
1910.1044	1,2-Dibromo-3-chloropropane
1910.1045	Acrylonitrile
1910.1046	Exposure to cotton dust in cotton gins
1910.1047	Ethylene oxide
1910.1048	Formaldehyde
1910.1050	Methylenedianiline
1910.1200	Hazard communication
1910.1450	Occupational exposure to hazardous chemicals in laboratories
1910.1499	Source of standards
1910.1500	Standards organization

Another important provision of the OSH Act was the establishment of the National Institute for Occupational Safety and Health (NIOSH) within the Department of Health, Education, and Welfare, now the Department of Health and Human Services (DHHS). NIOSH is responsible for conducting research on occupational health and safety and acts as the technical arm for OSHA. Among the responsibilities of NIOSH are the identification of health hazards and research on chemical hazards. As part of these research activities, NIOSH often conducts workplace studies involving exposure assessment and medical surveillance, which are made publicly available. The agency also reviews and summarizes the toxicological and scientific literature for hazardous agents and recommends workplace exposure limits and standards. The results of these chemical reviews have been published in a series of NIOSH criteria documents. NIOSH is also responsible for training professionals in health and safety to ensure an adequate supply of personnel to implement the OSH Act. The main research facilities of the institute are in Cincinnati, Ohio.

Under the Occupational Safety and Health Act, employers are responsible for complying with all standards and regulations promulgated under the act and for furnishing to all employees a workplace environment that is free from recognized hazards that cause, or are likely to cause, death or serious physical harm. This so-called general duty clause, section 5(a)(1) of the act, also requires employees to comply with OSHA standards and regulations that are applicable to them. The general duty obligations may often be the basis for implementing engineering or other controls that may not otherwise be specified or required under OSHA regulations. For example, ventilation controls may be required to control exposures to a solvent that is known to be potentially toxic, but has no permissible airborne limit under OSHA regulations. In other cases, citations may be issued for ergonomics hazards, even though OSHA has not promulgated specific regulations concerning the control of such hazards.

With technical assistance from NIOSH, OSHA develops health standards that are based on research and other appropriate information available to the agency. In addition to considering the most recent scientific data, OSHA must consider the health and safety of employees, experience with other health and safety laws, and the feasibility of standards that it promulgates.

Section 6 of the Occupational Safety and Health Act describes the process of establishing health and safety standards. Procedures for rulemaking under the act include the publication of advanced notice of proposed rules, proposed rules, and final rules. Throughout the process, public comments are solicited and considered in the development of the rules. The Secretary of Labor has the authority under Section 6(c) of the act to establish emergency temporary standards when there is evidence to support the need. Emergency temporary standards have been promulgated for carcinogens, such as benzene and asbestos.

Many of the current chemical standards were promulgated shortly after the enactment of the original act in 1970. The initial health standards (29 CFR 1910.1000) were the airborne concentration limits that had been recommended in 1968 by the American Conference of Governmental Industrial Hygienists (ACGIH). The ACGIH is a group representing past or currently practicing governmental industrial hygienists. ACGIH publishes *Threshold Limit Values* (TLVs) for several hundred materials. The TLVs are guidelines developed to assist in controlling health hazards. ACGIH points out that these limits represent conditions under which nearly all workers can be exposed daily without experiencing adverse health effects; however, the group recognizes that individual susceptibilities vary and that some workers may experience adverse effects or discomfort below the threshold limits. ACGIH also stresses that these values should be used only by people trained in industrial hygiene.

OSHA adopted the 1968 threshold limit values as its original permissible exposure limits (PELs). These limits, listed in 29 CFR 1910.1000, remained largely unchanged until 1989, when OSHA promulgated rulemaking updating them. At that time, all of the PELs were reevaluated, and a large percentage of them were updated to reflect current knowledge. As a result, the PELs were more consistent with the existing ACGIH threshold limit values until they were overturned in a subsequent 1993 court decision. As a result of that decision, the PELs reverted to the pre-1989 levels. It is anticipated that OSHA will publish new limits through future rulemaking.

In addition to the early PELs, OSHA published expanded standards for 14 substances in 1974. Included were asbestos and several carcinogens, such as benzidine, β-naphthylamine, and ethyleneimine. These standards define requirements for workplace monitoring, training, labeling, medical surveillance, respiratory protection, and recordkeeping. Expanded standards have since been published for several additional chemicals, including benzene, ethylene oxide, and formaldehyde. The standard for asbestos has been updated to address the carcinogenicity of that compound.

The OSHA permissible exposure limits and the ACGIH threshold limit values may be expressed in several ways. The most commonly used limit type is the 8-h time-weighted average (TWA), which is an expression of the average workplace concentration over a typical 8-h workday. Additional limit types include ceiling limits—concentrations that must never be exceeded on an instantaneous basis—and short-term exposure limits (STELs), which are often expressed as 15-min averages. A concept that was developed by OSHA is the *action level*, defined as one-half of the PEL. Many of the chemical-specific standards incorporate the action level. Exceeding this level may invoke many of the monitoring, medical surveillance, training, and other requirements of these standards. Many chemicals that are toxic by the dermal route or are highly absorbed through intact skin are given an additional "skin notation." Skin contact with these materials must be minimized or prevented.

In addition to OSHA and ACGIH limits, several other agencies and groups recommend acceptable workplace exposure levels. NIOSH publishes *Recommended Exposure Limits* (RELs) and the American Industrial Hygiene Association (AIHA) publishes *Workplace Environmental Exposure Limits* (WEELs). Many companies use their handling expertise and their own toxicological studies to establish internal exposure guidelines for chemicals they market. Often, industry associations jointly establish recommended exposure limits for chemicals that they have tested. These internal guidelines must be included on the material safety data sheets supplied by the companies recommending the limits. Although OSHA PELs carry the force of law, health professionals often observe other exposure limits when evaluating workplace hazards.

The ACGIH reviews its published limits and updates a portion of them on a yearly basis. Before placing a new threshold limit value on its final list, the limit is published on a separate list of intended changes for 2 years, allowing time for public comment. OSHA does not have a procedure for regularly updating its PELs. Because all changes must be made through the rulemaking process, the PELs are updated much less frequently. Expanded chemical-specific standards are developed based on priorities established by the agency and, often, several years are required to promulgate a single standard. OSHA regularly publishes the status of current and proposed rulemaking.

II. ANTICIPATION AND RECOGNITION OF HAZARDS

The evaluation of potential exposures from an operation or process begins with the collection of information on the raw materials, intermediates, and final products present in the process. In the case of a process in the design phase, materials inventories may be supplied by the design engineer and other knowledgeable persons. Information concerning existing plants or processes should be supplied by manufacturing personnel. Often, chemists must be consulted to provide information concerning the potential formation of captive intermediates and unwanted by-products that may be hazardous. After developing the chemical inventories, the industrial hygienist consults with toxicologists and other health professionals to develop toxicity profiles of the materials (see Chapter 2). The following is a brief summary of the toxicity categories that are defined by OSHA in its Hazard Communication Standard.

A. Chemical Hazards

1. Carcinogens

Carcinogens are agents that are capable of causing or initiating cancer in humans or animals. Animal carcinogenicity data exist for several hundred chemicals, including some metals, some chlorinated hydrocarbons, formaldehyde, dimethyl sulfate, ethylene oxide, and common household products, such as saccharin. Because human data, obtained from epidemiological studies, is difficult to generate, relatively few chemicals or agents are recognized as human carcinogens. Examples of human carcinogens include vinyl chloride, bis(chloromethyl) ether, benzidine, its congeners, and benzene. Ionizing radiation has long been recognized as causing cancer in animals and humans. Other materials are regarded as suspected human carcinogens, depending on the amount and quality of available data. Several groups publish lists of known or suspected animal and human carcinogens. These include The International Agency for Research on Cancer (IARC), a working group of the World Health Organization (WHO), ACGIH, and the National Toxicology Program (NTP), a group represented by several U. S. governmental agencies. These groups often classify carcinogens according to the amount and adequacy of evidence available for them.

2. Irritants

Substances that are irritating or corrosive to the skin or eyes are considered to be hazardous. Most strong acids or bases are corrosive and cause tissue damage on contact. Hydrochloric acid, ammonium hydroxide, sodium hydroxide, several amines, and many other industrial chemicals are corrosive. Other chemicals, such as organic solvents and weak acids or bases, are irritating, but do not cause tissue damage.

3. Acute Toxins

Chemicals can also be categorized according to the degree of toxicity they exhibit in acute oral, dermal, or inhalation studies. OSHA classifies materials as toxic or highly toxic based on doses or concentrations that cause lethality in animals, usually rats. The values used in expressing acute toxicity for this purpose are the median lethal dose or median lethal concentration (LD_{50} or LC_{50}) values, which are statistically derived from animal studies as described in Chapter 2. For example, aniline is considered toxic by the oral route, with an LD_{50} in rats of 250 mg/kg of body weight. Chlorine, with a 1-h inhalation LC_{50} of 293 ppm in rats, is considered highly toxic. Many chemicals are toxic or highly toxic by dermal absorption and have been assigned TLVs or PELs with skin designations. These include aniline and several glycol ethers.

4. Sensitizers

Sensitizers constitute another OSHA hazard class. These are chemicals that produce immunological sensitization reactions in animals that have been administered initial and subsequent "challenge" doses to the skin. Several protocols are available for this kind of study, with the guinea pig being the most commonly used test species. Positive results indicate that the chemical is a potential human sensitizer. Examples include epoxy resins, isocyanates, and many acrylates and amines. Some chemicals, such as toluene diisocyanate, may be dermal and pulmonary sensitizers.

5. Target Organ Effects

Finally, any chemical that has been shown to cause target organ effects in a "statistically significant" study is classified as hazardous. These target organ effects may result from acute or chronic overexposures. Nephrotoxins are materials that cause kidney toxicity. Oxalic acid, a biotransformation product of ethylene glycol, may be precipitated as crystals in the kidney. If they are not eliminated, these crystals may lead to the formation of larger ones that obstruct the tubules of the kidneys, and renal injury may result. Lead is a classic nephrotoxin, having been associated with acute and chronic renal failure at relatively high doses. Hepatotoxins are agents that are associated with liver toxicity. Many chlorinated and nonchlorinated organic solvents exhibit well-documented hepatotoxicity. Lung toxins, such as fibrogenic (fibrosis-causing) dusts and the herbicide paraquat, are considered to be OSHA hazards. Of particular concern recently, are chemicals that injure the nervous system. Overexposure to many organic solvents, phosphorus compounds, and other chemicals can result in central nervous system (CNS) effects, including nausea, vomiting, diarrhea, headaches, and drowsiness. Some solvents, such as *n*-hexane and methyl butyl ketone, also affect the extremities, causing peripheral neuropathies in the limbs. Often, these nervous system effects are irreversible. Other target organs include the hematopoietic (blood and blood-forming) system, the brain, and the reproductive system. Obviously, many chemicals exert toxicity on many organ systems.

III. EVALUATION

The industrial hygienist employs toxicological data and other health effects information to develop exposure-assessment strategies. Qualitative toxicity- and exposure-ranking systems are used to prioritize the chemicals and agents found in a process or job task. An industrial hygiene-sampling program can then be established to characterize potentially significant hazards associated with the process.

The actual hazard posed by a material depends on several factors, including exposure, toxicity of the material, process controls, and individual factors and susceptibilities. After the industrial hygienist or health and safety professional has identified potential chemical biological, physical, or ergonomic stresses, monitoring must be conducted to determine the extent of exposure to those stresses. This section will deal only with the measurement of chemical hazards; however, methods and equipment are also available for measuring biological hazards and physical stresses, such as noise, ionizing radiation, and heat stress.

A. Industrial Hygiene Calculations

In the evaluation phase, the industrial hygienist will apply information concerning sampling volume and the mass of contaminant collected to determine its airborne concentration in mass per unit volume. Concentrations of particulates are most often expressed in units of milligrams of contaminant per cubic meter of air (mg/m^3) and gases and vapors are generally reported in parts per million by volume (ppm). Because the concentrations of gases and vapors are often reported as mass of material collected per volume of air sampled, it may be necessary to convert between milligrams per cubic meter and parts per million. This can be done using the following equation.

$$C(\text{ppm}) = \frac{C(\text{mg/m}^3) \times 22.45}{MW} \times \frac{T(\text{K})}{298} \times \frac{760}{P(\text{mm Hg})}$$

where C is the concentration, T is temperature, P is pressure, and MW is molecular weight, and 22.45 represents the volume of air, in liters, occupied by 1 g-mol of an ideal gas at 298 K and 1 atm (760 mm Hg) pressure.

The industrial hygienist can use information concerning the vapor pressure of a chemical to estimate the highest airborne concentration attainable for that material. This so-called saturated vapor concentration (*SVC*) is estimated using the following equation:

$$SVC = \frac{\text{vapor pressure} \times 10^6}{760}$$

where vapor pressure is measured in millimeters mercury (mm Hg) and *SVC* is the saturated vapor concentration, in parts per million, at 1 atm and the temperature at which the vapor pressure was measured. This estimate is often useful in predicting "worst case" scenarios.

B. Air Monitoring

Inhalation of gases, vapors, aerosols, and dusts is a primary route of exposure to industrial chemicals. *Gases* are materials, with very low density and viscosity, that expand and contract readily with changes in pressure and temperature. Gases typically expand with uniformity to completely occupy any container. The behavior of gases can be predicted and explained using the various gas laws. Examples of gases often encountered in industrial settings include hydrogen chloride, hydrogen cyanide, ethylene oxide, chlorine, ammonia, formaldehyde, and phosgene. Some of these gases, such as hydrogen chloride, ammonia, and formaldehyde, may be handled as liquid solutions, in which the gas has been dissolved in a solvent, such as water. Often, the resulting solution is a strongly irritating acid or base.

In addition to the irritation and dermal concerns generally associated with these types of liquid materials, they are likely to present inhalation hazards owing to off-gassing. However, it is likely that the inhalation hazards associated with the liquid solutions are much less than those associated with the gases.

A *vapor* is the gaseous form of a material that is a liquid at normal temperature and pressure. Examples of such materials include organic solvents, such a benzene, toluene, and naphtha; alcohols; isocyanates; some amines; and many ketones, ethers, and aldehydes. The maximum potential concentration of a vapor above its liquid source is dependent on the vapor pressure of the liquid at a given temperature.

Particulates are particles of liquid or solid matter. *Dusts* are solid organic or inorganic particulates that are formed by crushing, grinding, impaction, or other physical activities. *Aerosols* are liquid or solid particles, with diameters smaller than 0.1 μm, that will remain suspended in air. *Fumes*, which are often confused with vapors, are airborne particulates formed by the evaporation and subsequent condensation of solid materials, such as metals during welding operations. Fumes typically have diameters smaller than 1 μm.

The industrial hygienist must understand the characteristics of each of these types of contaminants to effectively evaluate exposures with accuracy and precision. The engineer must also understand these characteristics to be able to design effective controls. Of special concern are factors that influence the collection of particulates. In selecting a method for the collection and analysis of particulates, the composition of the material, the size of its particles, and its potential reactivity or volatility must be considered. The diameter of the particulate being collected, the size of the orifice through which it is being drawn, and the physical obstructions around the sampling instrument, all can have a significant effect on the accuracy and precision of the method.

Before one monitors an operation, one must understand the process and characterize the physical state of the material throughout the operation. For example, methylene bisphenyl isocyanate (MDI), a chemical used in many polyurethane-foaming operations, is often handled as a heated liquid, and escaping vapors may condense to an aerosol. Prepolymers of MDI, which are liquids at room temperature, are often sprayed during processing, resulting in aerosol formation. These emissions must be collected using particulate sampling methods. However, MDI has a vapor pressure and is reactive; therefore, the sample must be chemically stabilized if it is collected on a filter medium; otherwise, collection efficiency will be low and unpredictable owing to evaporation. To assure that proper collection techniques are used in monitoring airborne chemical contaminants, the industrial hygienist will attempt to use a well-validated, published method whenever possible.

1. Industrial Hygiene Survey

Before a field survey is initiated, the industrial hygienist typically will conduct a project review or a walk-through survey of an existing site to become familiar with plant processes and job operations and to identify potential sources of exposures. The hygienist will also observe control methods, such as ventilation, isolation, and employee administrative controls, that may be in use. During this evaluation phase of the survey, the industrial hygienist should work with process engineers to obtain detailed information on the process flow, process equipment, machinery, and other potential emission sources. After this initial review, a sampling strategy is developed that includes lists of materials to be sampled, validated sampling, and analytical methodologies and protocols for obtaining representative samples.

The samples that will be collected during the survey may be of several types. Depending on need, the health professional may decide to collect personal, area, or grab samples. Personal and area samples may be collected over long or short time periods, by using active or passive methods. Short-term or instantaneous samples, often called grab samples, can be collected by instrumental methods, by the use of absorption techniques, or in collectors of known volume. These collectors include flexible plastic bags and heavy-walled glass vacuum bottles that can be taken back to the laboratory for analysis. An advantage of grab samples is that the collection efficiency of this method is considered to be 100%; however, the method must not be used when sampling atmospheres with reactive gases. Highly reactive compounds may react with particulates, the sample collector, other components of the sampled atmosphere, or moisture in the air, and will require special techniques.

2. Personal Sampling

Personal samples are those collected on individuals to estimate personal exposures. If the sampling strategy has been designed to collect representative samples for a job operation, these personal-sampling results will yield the most reliable estimates of exposure. Personal samples may be obtained for chemical hazards and physical stresses, such as heat, noise, and radiation. They are generally collected in what is called the breathing zone, which has recently been redefined as a hemisphere forward of the shoulders with a 15- to 22.5-cm (6- to 9-in.) radius. In developing the monitoring program, the industrial hygienist must ensure that samples are random and representative to assess them statistically. Personal monitoring should also include samples to estimate ceiling and short-term exposures, to ensure compliance with the respective exposure limits.

3. Area Sampling

Area samples are collected to estimate exposures at different locations and areas throughout the workplace. If the workplace exposures are well characterized by location, it is possible to estimate the average worker's exposure by determining the person's movements and activities throughout the workplace. An advantage of area monitoring is that the industrial hygienist is able to understand the daily fluctuations in levels of airborne contaminants at each location and is able to develop an understanding of the contribution of each part of the process to workplace exposures. Area monitoring is particularly useful to the engineer, since it can also be used to locate fugitive emissions so that engineering controls can be effectively designed and implemented. Because it is often not feasible to adequately characterize the workplace and workers' movements to develop reliable estimates of personal exposure, area monitoring is most often employed to characterize the process and locate sources of exposure, whereas personal monitoring is used to estimate employee exposure.

4. Active and Passive Monitoring

The industrial hygienist may employ active or passive monitoring techniques for collecting personal or area samples. Active monitoring involves the use of pumps to collect grab samples or to pull samples through collecting media, such as adsorbant tubes and filters. In contrast, passive monitoring employs diffusional collection devices that work on the principles of Fick's first law of diffusion. In passive collection, transport of the contaminant to a collecting surface occurs by diffusion along a concentration gradient. The sampling rate for a specific sampler is fixed and depends on the length of the diffusion path, the area of the sampler orifice, and the diffusion coefficient of the sampler. Temperature, pressure, and air movement can have positive or negative effects on sampling rate and must be considered when using this method. Because of their simplicity and ease of use, passive monitors are often used when industrial hygiene resources are limited. Passive-monitoring devices are available for a variety of contaminants, including organic vapors, ethylene oxide, formaldehyde, and phosgene. These devices generally have limited use in identifying short-term exposures and sources of exposures. Whether using active or passive methods, the industrial hygienist must consider the accuracy, precision, and level of validation of the method.

5. Active-Monitoring Equipment

Active-sampling methods for particulates, gases, and vapors involve the use of a sampling train, which includes a collecting medium, a flowmeter, and a vacuum pump. For particulates, a preselector is often used upstream from the collector to select for particles of various diameters. The order in which air is pulled through the sampling train is as follows: (1) preselector, when used; (2) collecting medium; (3) flowmeter; and (4) pumps.

The pump is a critical part of the sampling train. Typically, industrial hygiene pumps are small, portable, battery-operated units with flow rates ranging from 0.1 L/min to more than 5 L/min. Several factors are considered in selecting the most appropriate pump for a situation. Higher sampling rates are generally used when sampling for particulates and for short-term monitoring of some gases and vapors. Lower-flow rates are usually required when collecting samples of organic vapors and gases to maintain collection efficiency and avoid overloading the collection medium. Low-flow pumps are generally used to monitor for organic vapors, which are typically collected at a rate between 50 and 200 ml/min. An important factor when selecting battery-powered pumps is the environment in which it will be used. Only pumps that are intrinsically safe and have been approved for such use can be used in atmospheres that may contain explosive or flammable vapors or gases.

6. Flowmeter

The airflow rate is critical in determining the volume of sample that has been collected and in determining the contaminant's airborne concentration in mass per unit volume.

To assure operation at constant-flow rates, pumps employ the use of flow-rate meters, such as critical orifices, stroke counters, and rotameters. The rotameter, which is typically incorporated into high-flow pumps, collecting at rates of more than 1 L/min, consists of a float that moves up and down a vertical tapered tube. Air passing through the tube causes the ball to move upward until the ball's weight and the force exerted by the air movement have reached equilibrium. The rotameter must be calibrated to a primary source before its use in the field. Some pumps employ critical orifices to assure constant-flow rates. The critical orifice consists of a sharp, narrow constriction, such as a precision-drilled hole, through which the airstream is directed. Under certain conditions, the critical orifice assures a nearly constant-flow rate. Some pumps use piston or diaphragm stroke counters to record the number of strokes, which can be related to air volume when calibrated with a bubble meter or other flowmeter.

Flowmeters on field-sampling instruments are calibrated using one of several methods. Primary standards are those that measure volume directly and, therefore, are preferred. Primary airflow standards include bubble meters, spirometers, and Mariotti bottles. The time required to draw a measured volume of air through these systems is measured and the resulting flow rate is calculated. These methods are typically accurate to within 1%.

If primary methods cannot be used, the industrial hygienist often uses secondary calibration methods, which include rotameters, critical orifices, dry-gas meters, and wet-test meters. These standards must be periodically calibrated against primary standards. The rotameter is typically accurate to within 5%. The critical orifice, which maintains a constant flow rate through a small opening when the downstream absolute pressure is less than 53% of the upstream absolute pressure, has a similar accuracy. The dry-gas meter, which consists of a counter mechanism and two chambers being alternately filled and emptied, can be highly accurate. The wet-test meter is a partitioned drum that is half submerged in a liquid, typically water. As air enters a partition, it causes it to rise and develop a rotation motion. A counter records the number of revolutions. Although this standard has a high degree of accuracy, it may be influenced by corrosion, leaks, and the absorption of gas into the liquid.

Other secondary standards, including the venturi meter, orifice meter, and manometer have less accuracy than those previously discussed and, therefore, are not often used by industrial hygienists for pump calibration.

7. Collection Media

A key consideration when monitoring for gases, vapors, and particulates is the collecting medium. Among the more common air-sampling media are glass or metal sorbent tubes containing adsorbents, such as charcoal, silica gel, and alumina gel; impingers with absorptive or chemically reactive reagents; and filters that mechanically or chemically collect contaminants.

Many of the early collection methods employed the use of impingers, which are glass containers through which the contaminated airstream is bubbled. The airstream enters the impingers in the form of small bubbles, making the contaminant of concern more available to react with the collecting reagent to form a nonvolatile product. Examples of this process include neutralization of acid gases, such as HCl, using caustic scrubbing solutions. Other contaminants may be collected in specialized solutions. For example, isocyanates, including toluene diisocyanate (TDI), are collected by the modified Marcali method, which uses a solution of hydrochloric and acetic acids. In solution, the isocyanate is hydrolyzed to the corresponding amine, which is then diazotized and coupled with a substituted ethylenediamine to form a colored complex that can be analyzed spectrophotometrically. The more recent method of sampling for isocyanates involves the collection of vapors and particulates on glass fiber filters impregnated with 1-(2-pyridyl)piperazine and subsequent analysis using high-performance liquid chromatography (HPLC). Another chemical for which impinger methods have been traditionally used is formaldehyde. This method, used for aldehydes, involves the use of chromotropic acid in concentrated sulfuric acid to collect formaldehyde in an impinger. After heating to ensure complete reaction, spectrophotometry is used to determine the amount of formaldehyde collected. A more recent method employs the use of coated XAD-2 adsorbent tubes, toluene desorption, and gas chromatography to determine formaldehyde concentrations in air.

Particulates and aerosols are most often collected on filter media that are inserted into a plastic support cartridge. Several types of filter materials are available, including Teflon, PVC, and mixed cellulose ester, all of which are porous materials. Others include glass, plastic, and cellulose, which are fibrous filters. Collection of particles on the filters occurs by several mechanisms; however, the primary mechanisms are impaction and direct interception. As with the collection of gases and vapors on adsorbents, the choice of filters is based on several factors. Glass fiber filters, for example, are not hygroscopic, are temperature-resistant, and have high capacity. Metals are typically collected on mixed cellulose ester fiber filters, which can be dissolved in acid solution before atomic absorption analysis. Before selecting a filter type, the industrial hygienist will refer to a method validated for the contaminant of concern.

Preselectors may be used at the beginning of the sampling train to select for particulates of specific sizes or to separate particles by size. Often, cyclones are incorporated into the sampling train to collect the respirable particulate fractions. These instruments select for particles smaller than 10 μm in diameter, which can penetrate into the lungs. Cyclones operate by the circular movement of air that has been drawn through an orifice; unwanted heavier particles are thrown from the center of the airstream and drop out, whereas lighter particles of the desired size are retained in the airstream and are collected on the filter medium.

Adsorbent tube-sampling methods have been developed for hundreds of organic vapors. The type of sorbent tube to be used depends on the physical and chemical characteristics of the material being collected. Generally, activated charcoal and polymers, such as Tenax, are used to adsorb organic vapors, whereas silica gel is used to collect polar and high-boiling materials. The contaminant adsorbs onto the surface of the medium through surface forces until it is desorbed for analysis. Because silica gel is polar, it is much more sensitive to the effects of high relative humidity than charcoal and other nonpolar media.

Many vapors, including those of *n*-hexane, 2-hexanone, isoamyl acetate, benzene, and toluene, are collected on charcoal tubes and desorbed with carbon disulfide. The resulting solution is then analyzed by gas chromatography with a flame ionization detector. Several other chemicals, including 2-methoxyethanol and other glycol ethers, are collected on charcoal and desorbed with specialized solvents, such as carbon disulfide and methanol. Still other gases and vapors are collected by using special adsorbents. For example, ethylene oxide, a highly reactive gas, is collected on a hydrobromic acid-coated charcoal tube to produce 2-bromoethanol. The reaction product is then desorbed with *N,N*-dimethylformamide, derivatized to a heptafluorobutyrate ester, and analyzed by gas chromatography using an electron-capture detector.

After a material has been collected on a granular adsorbent, on a filter, or in an impinger solution, the medium must be analyzed to determine the amount collected. This information, in conjunction with the known sampling volume, is then used to determine the airborne concentration in mass per unit volume. Preparation of the sample for analysis may involve desorption of organics from granular adsorbents in various solvents, reactions of contaminants absorbed in liquid solvents, digestion of filters for metal analysis, or various other procedures. After the sample has been appropriately prepared, analysis is accomplished using various methods, including atomic absorption spectroscopy, spectrophotometry, gas chromatography, liquid chromatography, mass spectrometry, ion chromatography, and microscopy. NIOSH and OSHA have published validated methods for hundreds of workplace contaminants [1, 2].

Many instruments exist for direct-monitoring of contaminants. These include colorimetric indicator tubes (often referred to as detector tubes), infrared and ultraviolet spectrophotometers, flame ionization detectors, electrochemical cells, portable gas chromatographs, and chemiluminescence detectors. Direct-reading methods for detecting aerosols are also available; they include light-scattering photometers, piezoelectric balances, and beta-radiation attenuation detectors. The advantages of these direct-reading instruments are that they give instantaneous concentrations and are sufficiently accurate to be useful in locating fugitive emissions. Combustibility and lower explosive limit (LEL) meters employing catalytic combustion detectors are available for monitoring for the presence of explosive atmospheres.

Many currently available instruments employ some of the methods described in the foregoing to continuously monitor for workplace contaminants. Gas chromatographic and infrared systems are common. Continuous-monitoring systems are capable of monitoring at several points and sounding alarms when unacceptable concentrations are detected. These monitors should be located close to anticipated emission sources and in areas where the highest potential airborne concentrations are expected. It must be remembered that the range, selectivity, and sensitivity of each instrument must be considered, and that maintenance is critical to their operation.

C. Biological Monitoring

The best measure of an individual's exposure to a chemical is derived from biological monitoring. This type of monitoring involves the analysis of body fluids, tissues, or exhaled breath for contaminants or metabolic products of the contaminants. Biological monitoring is particularly useful for estimating exposure to chemicals that are easily absorbed through intact skin or have low vapor pressures and, consequently, lower potential for inhalation. In such instances, simple airborne monitoring provides no information about whether an individual has been exposed by the dermal route or how the contaminant has been absorbed. Biological monitoring can assist the industrial hygienist and engineer in recommending personal protective equipment or other control measures that may be appropriate for an operation.

Unfortunately, there are few validated biological-monitoring methods for industrial chemicals. Many of those that are available have been published by ACGIH as biological exposure indices (BEIs). Among the chemicals for which biological-monitoring methods are available are *N,N*-dimethylformamide (monomethylformamide in urine), alcohols (breath), lead (blood), dichlorobenzidine (DCB in urine), aniline (*p*-aminophenol in urine), and several metals (urine and body tissues). For biological-monitoring methods to be valid and meaningful, a large database must exist on the pharmacokinetics, metabolism, and chemistry of the material. Extensive data from human monitoring are also essential in interpreting the results of biomonitoring. These monitoring programs are generally administered by site or corporate medical departments, with assistance from the industrial hygiene department.

D. Industrial Hygiene Data

Industrial hygiene data must be maintained for many years and stored in an accessible way. There are several reasons for this. First, to conduct epidemiological studies, good estimates of worker exposures are essential. Industrial hygienists often work with epidemiologists many years after data have been collected to develop exposure histories for epidemiological studies. To do so, it is important that data are stored in such a way that they can be searched by chemical, job classification, process, plant, employee identification, and date. Another important reason for storing industrial hygiene data is to satisfy constantly expanding regulatory requirements.

Most large companies have purchased or developed sophisticated computer systems to store and access this data to be able to generate reports for use in epidemiological studies. In some of these systems, interfaces exist between medical, personnel, and industrial hygiene data, assisting medical departments in performing epidemiological studies and administering screening programs. Other systems incorporate other types of health and environmental information, including toxicological, safety, and regulatory data. Industrial process designers and production engineers must become familiar with the databases that are available and the information they provide.

IV. CONTROL METHODS AND INDUSTRIAL VENTILATION

A. Control Methods

After a source of contamination has been identified in a process, several methods of control are available to the industrial hygienist and engineer. Because of the costs associated with retrofitting, it is preferable to implement controls in the design phase of a project. The physical properties, acceptable exposure limits, toxicological properties, and other health and safety issues related to the process materials must be considered early in planning. Occasionally, it will be necessary to implement controls in existing plants and retrofit processes. Since many of these methods involve engineering controls, the industrial engineer is crucial to this phase of industrial hygiene.

The task of controlling potential exposures must be shared by the industrial hygienist, plant management, line supervisors, engineers, and employees. Control methods include material and process substitution, process isolation, wet controls, housekeeping and maintenance, personal hygiene, administrative controls, personal protective equipment, and ventilation. Because most exposures occur as a result of the process design or failures in the process equipment, it is critical for the engineer to be involved in the design of the project and the programs for maintenance. It is unusual for engineers to receive adequate training in the evaluation and control of hazards during their formal education. Professional training courses and workshops dealing with subjects, such as noise control, industrial ventilation, and other related topics, are valuable in providing engineers with the information necessary to design controls for potentially hazardous materials.

1. Material Substitution

The first control method that should be considered is material substitution. This method involves the substitution of one material in a process with one that is less hazardous. Occasionally, this decision may be based on toxicological information available for the materials, or a material may be selected as a replacement because its physical properties make it less hazardous.

Chemicals with high flash points are often used to replace flammable or combustible materials. Many of the chlorinated solvents have been chosen in the past because of their favorable flammability characteristics. Vapor pressure is another important physical property to be considered when selecting potential process chemical substitutions. As discussed previously, vapor pressure is a critical factor in determining potential airborne exposure to a chemical. Chemicals with lower vapor pressures exhibit lower saturated vapor concentrations (SVCs). These materials generally present lower exposure hazards and are typically easier to handle and control. For example, *N*-methylpyrrolidone, with a vapor pressure of 1 mm Hg at 20°C, has a theoretical SVC of about 1315 ppm at that temperature. Methanol, on the other hand, with a vapor pressure of 92 mm Hg at 20°C, has a saturated vapor concentration of more than 12,000 ppm. The physical properties, such as vapor pressure, and the toxicity of each material must be considered before using substitution as a method of reducing potential hazard.

Substitution has been used extensively to replace many organic and inorganic chemicals that present safety or toxicological hazards. For example, lead- or chromium-based paint pigments have been largely replaced over the last several years by less toxic metals and organic pigments. Some of the more toxic chlorinated solvents, such as carbon tetrachloride, have been replaced with less toxic chlorinated hydrocarbons and some nonchlorinated solvents. The traditional solvent-borne paints are beginning to be replaced with "water-borne" paints, which generally contain lower amounts of volatile organic compounds (VOCs). Another example of the use of less toxic materials is the substitution of glycol ethers, which are used extensively in industry as solvents in the manufacture of lacquers, resins, varnishes, dyestuffs, printing inks, and stripping compounds. They are also present in some consumer products, including latex paints. Ethylene glycol ethers, such as 2-ethoxyethanol, are now being replaced with the corresponding propylene glycol ethers in processes and products. This shift to the propylene glycol ethers is primarily because the ethylene glycol ethers have been reported to cause birth defects and male and female reproductive effects in several animal species. The propylene glycol ethers, on the other hand, appear to be less toxic and do not have the same potential for adverse reproductive effects.

A common mistake when substituting materials is to replace a chemical of known toxicity with one that has not been adequately or completely evaluated for toxicity, under the assumption that lack of information implies that a chemical is safe. The identification of less hazardous substitutes will depend on having adequate and current data and toxicological information. Sometimes, a less hazardous, effective substitute may not be available or feasible to use and the hygienist and engineer must consider alternative controls.

2. Process Substitution

Another method for controlling the occupational environment is process substitution, in which a process is modified to make it less hazardous or is replaced by another, less hazardous, process. For example, a spraying operation might be substituted with a less hazardous dipping process. The application of industrial coatings or paints in dip tanks can minimize or eliminate the creation of mists and aerosols. Local ventilation may then be used to control vapors emitted from the operation. Another advantage of substituting with less hazardous processes, such as dip tanks, is that personal protective equipment is often no longer necessary. As with many other control methods, process substitution is most efficient if considered during the design phase of the process or plant.

3. Process Enclosure and Isolation

One of the most effective exposure control strategies is to isolate the process from the control areas where employees are located during normal operations. Although more difficult and costly to implement in existing processes, this can be among the most effective of control strategies for new plants. Most modern chemical plant processes are controlled from enclosed or distant control areas. Remote processing often offers production and efficiency advantages and serves to isolate the potential process emissions from the workforce. Other examples of process isolation include the well-recognized isolation techniques used in the handling of radioactive materials and the use of acoustical sound barriers to enclose or isolate noisy operations.

4. Wet Controls

One of the oldest and most effective methods for controlling exposures to dusts is the practice of wetting or spraying the operation or dusty area to be cleaned. Such wet methods are common at dusty construction sites, in sand-casting operations, and at quarrying operations. Sweeping operations in plants can be performed more cleanly and with less dust generation by wetting the area before sweeping. This can also make it easier to collect and prepare the material for proper disposal.

5. Housekeeping and Maintenance

Good-housekeeping practices are a critical element to any program for controlling potentially hazardous materials. All work areas must be kept clean of process chemicals, solvents, and dusts. Sweeping is sometimes done when the dusty material being collected is of low toxicity; however, vacuum cleaners with high-efficiency particulate filters are employed when cleaning areas contaminated with toxic materials, such as asbestos, lead, and cadmium. Leaks or spills should be stopped and remediated immediately. Engineers should be involved in assuring that equipment is well maintained and that processes are periodically shut down to facilitate the maintenance activities. Comprehensive, written maintenance programs should be developed for all processes, with substantial input from engineering and maintenance groups. Careful attention must be paid to providing the appropriate personal protective equipment and training necessary for employees to remediate spills and emergencies safely. OSHA has published regulations governing the remediation of hazardous waste operations and emergencies, in 29 CFR 1910.120, also known as the HAZWOPER standard.

6. Personal Hygiene

Personal hygiene is also essential in effectively controlling employee exposures to hazardous materials. Eating, drinking, and smoking should be discouraged in all work areas, and workers should be instructed to wash or shower before eating or leaving the workplace at the end of the day. Appropriate eyewash and emergency shower facilities must be provided throughout the workplace, especially in areas where corrosive or irritating materials are handled. Many of the OSHA expanded standards, such as those for benzene and acrylonitrile, contain extensive hygiene requirements, including the establishment of regulated areas and clean or dirty shower facilities.

Persons working in areas where hazardous materials are handled should wear clean clothing daily, leaving the dirty clothing at the place of employment. This will prevent workers from carrying potentially hazardous materials home and exposing family members. Occasionally, it may be necessary to discard contaminated leather articles to prevent dermal contact. Often, the employer supplies clean clothing and has it laundered by professional laundering services.

7. Administrative Controls

Under some conditions, administrative controls may be effective in reducing employee exposures to hazards. Reducing the length of work periods, for example, is an accepted way of decreasing the cumulative exposures of an individual to such agents as noise, heat, and chemicals. It should be kept in mind that reducing the length of time for each worker's rotation may increase the total number of persons potentially exposed to a process. In addition, limiting the amount of time that persons are exposed to workplace contaminants does nothing to reduce emissions and remove potential sources of exposure in the process. Administrative methods are often used to control exposures to noise. For example, under the OSHA noise standard, one can be exposed to 90 dBA for 8 h, 95 dBA for 4 h, 100 dBA for 2 h, and so on. If monitoring has indicated that an area has noise levels for which 8-h exposures are unacceptable, the employer may choose to limit employee access to the area to an acceptable exposure period.

8. Personal Protective Equipment

If other means of controls prove to be impossible or infeasible, the use of personal protective equipment by employees may become necessary. Such control methods, however, do not reduce or eliminate the source of the potential hazard and are the least-preferred choice for controlling exposure. Personal protective equipment includes air-purifying and air-supplying respirators, hearing protection to reduce noise exposures, eye and face protection, and gloves, boots, and other impervious clothing. The selection and use of the various types of personal protective equipment are discussed in detail in Chapter 4.

B. Ventilation Methods

1. Industrial Ventilation

Industrial ventilation is the removal and replacement of air to maintain concentrations of potentially hazardous contaminants to levels that ensure a healthy workplace. Although the main purpose of ventilation is the control of hazardous gases, vapors, and particulates, it is also used to replenish oxygen, control odors, control flammable and combustible materials, and to heat, cool, and control humidity. The industrial hygienist must work with the engineer to design the appropriate ventilation system for each operation within a process. Ventilation systems often are not given sufficient attention in the design phase because they are not part of the production process; however, failure to design effective systems may incur additional work and cost later. The following discussion will highlight the basic principles of controlling hazardous contaminants using natural and mechanical ventilation; however, the engineer and industrial hygienist should consult the many available references on this subject from such groups as ACGIH and the American Society for Heating, Refrigerating, and Air-Conditioning Engineers (ASHRAE) (3–7).

2. Natural Ventilation

Ventilation systems may be of two types, natural or mechanical, both of which may be used within the same process. Natural ventilation systems are those that do not employ mechanical equipment, such as fans, to move air. Such a system depends on convective temperature currents within buildings and air movements across the exteriors of buildings, causing differential pressures, to remove contaminants. Natural ventilation is generally more effective in older buildings, which are not as tightly constructed as newer buildings and have windows that can be opened. Older buildings can be opened to allow outside air movement and air conventions from rising warm air inside to move air through the building. Natural ventilation is often not feasible because outside air movement is variable and cannot always be predicted. Although hot processes are possible candidates for the use of this type of ventilation, they are less effective than mechanical systems in controlling air movement and directing the contaminated air away from employees running the operation. In addition, it is not possible to collect and prevent the release of contaminants to the environment when using natural ventilation.

Unlike natural ventilation, mechanical systems employ fans to control the movement of air from processes. Mechanical ventilation may use local exhaust to trap and remove contaminated air at its source, or it may use fans to dilute the general room atmosphere with fresh makeup air.

3. General Mechanical Ventilation

It is sometimes impractical to attempt to control large operations with local exhaust systems. In such instances, fans may be used to provide general dilution ventilation for the process. Although the system may be effective in controlling the movement of air throughout a room, perfect mixing of air seldom occurs and high concentrations of contaminants may exist in localized areas. Because of this, the systems must be well understood and the process must be closely monitored for high concentrations. Dilution ventilation is sometimes employed in processes for which large amounts of solvents are evaporated, such as solvent cleaning operations and painting and dipping processes. In these circumstances, the average solvent evaporation rate can often be predicted using information concerning the solvent's physical properties and its use volume. The cubic feet per minute (cfm) of dilution ventilation required to control the airborne levels of solvents to acceptable levels can be estimated using the following:

$$Q = \frac{\text{Pints evaporated}}{\text{Hour}} \times \frac{6.7 \times SG \times 10^6 \times K}{MW \times TLV}$$

where Q is the dilution ventilation in cfm, SG is the specific gravity of the solvent, K is a safety factor, MW is the molecular weight of the solvent and TLV is the threshold limit value or other desired concentration in parts per million [5].

The ACGIH has published dilution air volumes for vapors of many commonly used solvents [3]. It should be cautioned that a safety factor must be used when making these estimates to ensure that workplace concentrations are below acceptable exposure levels. Often, one-half of the PEL or TLV, or a safety factor of 2, is used; however, this varies depending on the physical characteristics of the room, the location of persons around the process, and the toxicity of the chemicals being processed. When diluting more than one contaminant, the required dilution volume requirements should be considered additive, if the effects of all materials are similar or are unknown. When the effects of the materials of all potential contaminants are different, the lowest PEL or TLV should be used to determine dilution requirements. Dilution ventilation may be used to control airborne levels of flammable materials by controlling to the lower explosive limit (LEL), rather than the acceptable exposure level. In such cases, the LEL for the most flammable material in the process should be used to estimate the necessary ventilation volume. Again, care must be taken to ensure that high localized concentrations of contaminants do not exist.

Fan location is critical to achieving efficient general ventilation. Fans should always be located so that contaminated air is pulled away from the breathing zone of workers. Contaminants must never be drawn through the breathing zone. Likewise, fresh air inlets are best situated so that the clean air is drawn through the worker's breathing zone to the contaminated area and the air exhaust outlet.

A concept that is sometimes used is that of "air changes per hour." Some guidelines and building codes employ this method to provide guidance on the amount of ventilation necessary to control exposures from certain operations. Although this concept has the advantage of being simple and reduces the amount of engineering required to design a system, it is inappropriate for use in controlling hazardous materials. Because complete mixing and air displacement seldom occur, the number of calculated air changes does not accurately reflect the true number of exchanges. The industrial hygienist and engineer must recognize that the design criteria for ventilation systems should be a function of the process and problems associated with it, not a function of the room size. However, air changes per hour may be used as a basis for ventilating some operations where toxic materials are not handled.

Replacement air must always be considered when designing a ventilation system. Air being exhausted from a building or process area must be replaced. This replacement may come from openings in the building or room, especially in old buildings, or it may be delivered to the building by design. The ACGIH publication *Industrial Ventilation—A Manual of Recommended Practice* provides guidance in providing makeup air so that the efficient operation of the ventilation system and better control of air movement are assured.

Although it is not effective in removing potentially toxic contaminants, general ventilation is often acceptable in providing comfort ventilation to control humidity, temperature, odors, and carbon dioxide buildup and to remove dusts and biological agents from the air supply.

4. Local Exhaust Ventilation

A second way of providing mechanical ventilation to control potentially hazardous materials is to design a local exhaust system that removes contaminants from the workplace at the point where they are emitted. Such a system can then move the contaminated air to a single exhaust point, where it can be treated to remove contaminants before sending the air to the environment. Local exhaust systems are often preferred because they provide better control of toxic contaminants and because they often handle much smaller volumes of air. As a result of handling smaller air volumes, smaller fans and air cleaners are required and less heat or cold loss occurs. Local exhaust prevents the movement of contaminants from their sources to other work areas. Local exhaust should be considered for operations or processes involving toxic materials, variable emission rates, widely dispersed emission sources, and flammable substances. In addition, such systems are necessary if general ventilation is ineffective in removing contaminants from the breathing zones of workers, or if high localized concentrations exist.

Measurements for velocity, pressure, and flow rate are employed in evaluating the effectiveness of ventilation systems. *Static pressure*, which results from the random movement of molecules, is expressed as a measure compared with atmospheric pressure. *Velocity pressure* is the pressure exerted by airflow; it acts only in the direction of the flow of air. The *total pressure* of the system is the sum of the static and velocity pressures. Total pressure and static pressure in local exhaust systems are measured using U-tube manometers. The velocity pressure is measured with a pitot tube, which consists of two concentric tubes measuring total pressure and static pressure. The two tubes are connected in such a way that the static pressure is nullified, giving a reading for the velocity pressure. Specific procedures have been published for performing pitot traverses of ductwork in ventilation systems. More information is available in the ACGIH *Industrial Ventilation Manual* [3].

At 70°F and 29.92 in. Hg (1 atm), velocity pressure can be related to air velocity using the equation:

$$v = 4005\ (VP)^{1/2}$$

where v is the air velocity in feet per minute and VP is velocity pressure in inches of mercury. The air velocity and cross-sectional area of flow can then be used to calculate the flow rate in the system using:

$$Q = vA$$

where Q is the flow rate in cubic feet per minute (cfm), v is the velocity in feet per minute, and A is the area in square feet.

These measurements of pressures and flow rates are used by engineers and industrial hygienists in designing and balancing systems for specific operations. Each system must be designed to collect and carry specific contaminants. The collection and movement of large particles, for example, will require the use of greater flow rates and velocities than will be needed for gases and vapors. The industrial hygienist must work with the industrial engineer in designing efficient, effective local exhaust systems.

5. Components of Local Exhaust Ventilation Systems

There are five components in a local exhaust ventilation system. These are the hood, the point at which the contaminant is collected; ductwork, the pathway through which the air is moved to a single point; air-cleaning equipment, which is designed to remove certain contaminants, such as dusts and organic vapors; the fan, which creates airflow through the system; and the stack, through which the cleaned air is discharged to the environment.

(*a*) *Hoods*. The hood is the point of entry for contaminants into the local exhaust system. Obviously, the contaminant must be collected efficiently at this point for the system to be effective. Three types of hoods are used in these systems: capture hoods, enclosing hoods, and receiving hoods.

Capture hoods. Capture hoods are located near the source of emission to draw air and contaminants from the process into the ventilation system. This is accomplished through suction created by the low-pressure area formed at the opening of the hood by air movement from the fan. Capture hoods may be designed to be simple duct openings, flanged openings, tapered inlets, bell-month inlets, or slot openings [3]. In each case, the air velocity through the opening can be predicted from the opening area and the flow rate [3]. The placement of a flange around a duct opening increases its collection efficiency by reducing turbulence at the opening. This will decrease entry loss and may increase airflow into the system by as much as 40%, depending on the size of the flange.

Entry loss, expressed as a percentage of velocity pressure (VP), and the coefficient of entry, a ratio of actual flow rate into the hood to the flow rate if no entry losses occurred, can be predicted for each type of hood. For example, ACGIH has reported an entry loss of 0.93 VP and a coefficient of entry of 0.72 for plain-opening ducts, and an entry loss of only 0.49 VP and coefficient of entry of 0.98 for the more efficient bell-mouth inlet. The previously described ACGIH publication should be consulted for additional information concerning other types of hoods.

Examples of processes for which capture hoods may be effective include drumming operations, welding operations, processes in which solvents are mixed or charged, and open, plating tank processes. In designing a system, the toxicity of materials, worker's breathing zone, temperature of the process, and other factors must be considered in determining the correct hood type and placement. In general, however, the hood should be located as close to the operation as possible and should draw air away from the breathing zone of employees.

Enclosure hoods. Enclosure hoods are especially effective because they are designed to completely contain the process and, therefore, the contaminant. Examples of processes for which enclosure hoods are commonly used include operations involving drumming and bagging, powder charging, and grinding wheels and tools. Sealed glove boxes are often used in handling radioactive substances, toxic chemicals, and pharmaceuticals. Complete enclosures generally provide the greatest control of airborne contaminants and should be considered whenever feasible.

Hoods used for grinding wheels and polishing equipment must provide sufficient exhaust ventilation to remove dusts and particulates and must supply the structural strength necessary to contain the wheel and protect the worker from potential wheel breakage. The American National Standards Institute (ANSI) and

ACGIH publications provide guidance concerning the design and flow requirements for grinding operations.

A special type of enclosing hood is the booth, an enclosure with an opening on one side for access. Operations are conducted inside a booth that has sufficient exhaust air drawn through the opening to prevent contaminants from escaping through the open side. These booths are designed so that contaminants are drawn away from the breathing zone of the worker. Paint spray operations, biological agent handling, and laboratory chemical handling are commonly carried out in booth-type hoods. Although booth hoods reduce the need for exhaust air, they require more incoming air than complete enclosures because one side is open.

Receiving hoods. The receiving hood, often referred to as the canopy hood, is located in such a way that the natural movement of air from the process flows toward its opening. This is a commonly used ventilation method used above hot processes, such as solvent cleaning tanks. Certain dust collection systems also use this design. For example, dusts from many grinding machines and radial saws are controlled using receiving hoods.

Many operations involve the use of solvent tanks for surface treatment, metal cleaning, degreasing, stripping, and acid treatment. Canopy receiving hoods are sometimes employed to collect contaminants from some of these operations; however, they are most effective when used for hot processes. The engineer must consider air movement and currents that may allow the release of the contaminant into the workplace when designing such a system. In addition, some processes may involve the movement of workers' heads over the tank or the lifting of parts from the tank. Under these circumstances, receiving hoods are not appropriate. The engineer should consult with the industrial hygienist and ventilation publications before incorporating this type of hood into a process.

(*b*) *Ducts*. After process air and contaminants have been collected by the hood, ducts are used to carry the contaminated air to the air-cleaner or to the outside environment. As air moves through the ducts, energy is lost in overcoming friction between the air (and entrained particles) and duct walls. The velocity of the air in the duct must be sufficiently high to transport the contaminants of concern. For example, vapors, gases, and smoke typically require minimum duct velocities of 1000–2000 ft/min (fpm), whereas dusts and powders require velocities ranging from 2500 to more than 4500 fpm, depending on particle size. ACGIH has published information concerning transport velocities for specific operations [3].

Although ducts may be made of several materials, including concrete, fiberglass, and flexible materials, most are made of circular galvanized steel. The choice of materials will be based on several factors, including cost, corrosion characteristics, performance, strength, and the characteristics of the airstream.

Just as pressure losses occur at the entrances to hoods, friction losses occur in the ductwork of local exhaust ventilation systems. This friction loss is described by the following equation:

$$\text{Friction loss} = \frac{fLv^2}{D}$$

where f is the friction coefficient, L is the length of the duct, v is the velocity in the duct, and D is the diameter. As indicated by this equation, friction in a duct is directly related to the length of the duct and the square of the air velocity. It is inversely related to the diameter. In addition, rough surfaces inside the ductwork tend to increase friction loss in the system. Charts are available that provide estimates of friction loss based on velocity, duct diameter, and flow rates [3].

Friction losses also occur because of turbulence caused by branch entries, elbows, and contractions and expansions in duct diameter. For example, when the diameter of a duct is contracted, the static pressure in the larger-diameter duct is converted to velocity pressure in the small duct. During the conversion from static pressure to velocity pressure, energy is lost, since the conversion is less than 100%. To minimize losses, tapered conversions are designed into the system to reduce losses from turbulence. It is generally recommended that each elbow have a radius of 2.5 diameters; as the radius becomes larger or smaller, the amount of velocity pressure loss increases. Branches are designed to enter ducts gradually, at entry angles of 30% or less. The maximum entry angle is 45%. Additional information on duct losses and losses in other parts of the local exhaust ventilation system are available from ACGIH [3].

In designing a system, the engineer or industrial hygienist must first consider the amount of airflow required at each hood to collect the contaminated air. Duct sizes are then selected for each branch in the system so that air movement will be distributed between hoods as necessary. During this design phase, the goal of the engineer is to maintain the proper air velocities to prevent the deposition of contaminants, and to hold cost and power requirements to a minimum. Because of the potentially high costs associated with an incorrectly designed or balanced ventilation system, the industrial hygienist must work closely with an engineer in the design phase.

(*c*) *Air cleaners.* Air cleaners are often designed into ventilation systems to remove contaminants from the airstream. Those intended for use in heating and air-conditioning systems are designed to handle large volumes of air. These systems clean incoming air from outside and recirculated air from within the building using filters that are often disposable.

Industrial ventilation systems carrying airstreams contaminated with potentially toxic materials must remove materials to prevent their release to the environment. Removal of contaminants may also be required because of regulations or to recover valuable materials. Such systems may have to efficiently remove dusts, such as silica, metals, and pigments; gases, vapors, fumes, and aerosols. The cleaners may have to operate under high- or low-loading conditions.

The cleaning method selected will depend upon the physical state of the contaminant, its physical properties, the airflow in the system, particle characteristics, and other factors. Various cleaners exist for collecting dusts. These include cyclones and wet/dry centrifugals, electrostatic precipitators, fabric filters, and settling chambers. Filters and baghouse filters operate under the principles of interception, impaction, and diffusion of particles. The mechanism for cyclones and centrifugal collectors is the generation of circular motions that move particles to the outer walls of the cleaner where they impact and fall out of the airstream. Electrostatic precipitators operate by creating an electrical field that charges particles in the airstream. The charged particles subsequently migrate to an oppositely charged plate, where they are collected and removed. Each of these methods has advantages and disadvantages that must be considered when designing the system.

Gases or vapors are collected or removed from airstreams using one of three methods; adsorption, absorption, or combustion. *Adsorption* is the process in which a gas or vapor adheres to the surface of a solid material, such as activated carbon or silica gel. In such a system, no chemical reaction occurs and breakthrough may occur if all active sites on the adsorbent are occupied by the material being collected. The capacity of an adsorbent will depend on several factors, including its surface area and the concentration of the contaminant in the airstream. After the adsorbent has been saturated, the solvents can often be reclaimed and the adsorbent reactivated.

Absorption is also used to collect vapors and gases. In this process, the contaminated airstream is fed to a scrubber or packed tower containing a liquid that will dissolve or chemically react with the contaminant. Because of its low toxicity and its ability to dissolve many materials, water is often used for this purpose. Often, water-soluble gases, such as ammonia and hydrogen chloride, are collected in this type of cleaning system. The resulting solutions from these operations must ultimately be disposed of responsibly.

Finally, airstreams may be cleaned of vapors or gases using combustion techniques. Sometimes, waste streams may be directly burned as fuel. Catalytic combustion, in which catalysts are used to accelerate combustion, is sometimes employed for removing odors and vapors from many operations.

In designing the air-cleaning device for an operation, the engineer will work with environmental specialists and industrial hygienists to select the appropriate method. These professionals will provide information on the health and environmental effects of the various contaminants and the resulting wastes and by-products of the cleaning operations. In addition, they will advise the engineer on the effect of regulations on the collection and ultimate disposal of these materials.

(*d*) *Fans*. Fans, exhausters, and blowers are called air-moving devices. Fans are critical to the local exhaust ventilation system, since they supply the energy to produce a continuous flow of air, resulting in the system's air movement. Whenever possible, the fan should be located downstream from the air cleaner so that it will not handle contaminated air and will pull, rather than push, air through the system.

Two kinds of fans are used in industrial ventilation: axial flow types and centrifugal types. Axial flow fans, using propellers or blades, have airflow parallel to the shaft. For centrifugal fans, the airflow is perpendicular to the shaft. Axial fans are typically more efficient, more compact, and less costly than centrifugal types. However, centrifugal fans, which have radial, forward-curved or backward-inclined blades, are generally less noisy than axial types. Because different fans exhibit different noise characteristics, it is important to consider the "noise rating" of the fan and the requirements of the process before selecting the fan to be used in the system.

The appropriate fan for a particular system is chosen based on several factors. Fans are characterized by the following factors: flow volume, the static pressure at which the flow is produced, motor horsepower, noise level, efficiency, and material-handling characteristics. The selection must be made based on the "fan curve" for the fan, which graphically shows the relation between the fan's flow rate and its static pressure, and the system curve, which describes volumetric flow and static pressure for the exhaust system. The fan is then selected based on these characteristics and the system requirements.

For systems in operation, the four "fan laws" are particularly useful to the industrial hygienist and engineer in predicting the effects of changes in operating parameters. These laws define the relationships between the following parameters: volume flow rate (cfm), revolutions per minute (rpm), horsepower (hp) and static pressure (SP). The four "laws" are as follows:

$$\frac{cfm_2}{cfm_1} = \frac{(SP_2)^{1/2}}{(SP_1)^{1/2}} \tag{1}$$

$$\frac{cfm_2}{cfm_1} = \frac{rpm_2}{rpm_1} \tag{2}$$

$$\frac{SP_2}{SP_1} = \frac{(rpm_2)^2}{(rpm_1)^2} \tag{3}$$

$$\frac{hp_2}{hp_1} = \frac{(rpm_2)^3}{(rpm_1)^3} \tag{4}$$

As the equations indicate, volume flow rate changes by the square root of the static pressure and is directly related to the revolutions per minute (rpm). Static pressure changes by the square of rpm and horsepower changes by the cube of the rpm.

Finally, for the ventilation system to work well, sufficient makeup air must be supplied to the areas from which contaminated air has been exhausted. Although the amount of makeup air must be equal to the volume of exhausted air, systems typically are designed to replace a 10% excess. Actual makeup air requirements will depend on the operation and area being ventilated.

(*e*) *Exhaust stacks*. Exhaust stacks must be carefully designed to prevent the recirculation of exhaust air into clean makeup air intakes. Before to designing this part of the local exhaust system, ventilation manuals should be consulted in determining the effect of air currents and stack height on contaminant dispersion. In addition, it must be kept in mind that stack heights are often controlled by local zoning laws; therefore, the appropriate environmental personnel must be consulted while designing this part of the system.

In summary, the engineer charged with designing a ventilation system for a process must understand the complex principles of industrial ventilation. The engineer must consult with the hygienist to obtain information on potential emission sources in the process and the toxicities of the materials being handled. The many references for ventilation principles and methods should be consulted throughout the design of the system.

V. THE INDUSTRIAL HYGIENE PROGRAM

The elements of industrial hygiene discussed previously in this chapter must be brought together and incorporated into effective industrial hygiene programs on both site and corporate levels. Site programs must include written policies, procedures, and practices that promote the recognition, evaluation, control, and prevention of health hazards and stresses.

These programs must address the issue of workplace exposure assessment of specific job operations and tasks. As discussed previously, it is important for workplace exposures to be characterized accurately to ensure that potential health hazards are minimized. If costly engineering controls, such as ventilation, are to be recommended, it is critical for the data to be reliable and truly representative. Evaluations of constantly changing, complex work environments require the development of logical exposure assessment strategies by site and corporate industrial hygienists. These strategies should include basic characterization of the workplace, workforce, and chemical inventory. From this information, individuals are categorized into groups of workers who are expected to have similar exposure profiles. These are called homogeneous exposure groups. The assessment strategy should also rank exposures using professional judgment and qualitative risk assessment tools. Monitoring programs are then written and formalized. Judgment and statistical tools can then be utilized to interpret the data and to make decisions concerning the need for controls or process changes.

The industrial hygiene program should also include procedures to ensure that employees and contractors receive appropriate training. This must include training as part of an effective hazard communication program, as required by OSHA in 29 CFR 1910.1200. Information concerning the potential hazards of chemicals and other stresses must be conveyed to the workforce. Employees must understand the health hazards they may encounter and how they can prevent these exposures. Training must also be conducted so that labeling systems used by the workers are understood. In addition to the need for worker training, it is essential that line management is trained to understand the requirements of the industrial hygiene program. Only with the strong committment of management can the program be effectively developed and implemented.

After the workplace and workforce have been characterized relative to exposures, each plant or site must ensure that all potential hazards are controlled or prevented. Whenever feasible, engineering controls, such as ventilation, process isolation, substitution, or barriers, should be used. When necessary, administrative controls may be used and, as a last resort, the use of personal protective equipment may be necessary. Policies addressing these issues should be included, in writing, as part of the program.

The program should also include documented procedures for ongoing inspections, preventative maintenance, housekeeping practices, respiratory protection training and use, annual program reviews, and maintenance of accurate records. These records include exposure information, as required by 29 CFR 1910.20, and documentation of training records. As discussed earlier, the OSHA HAZWOPER standard requires the development of plans for emergency response activities and training, and for drills to prepare potential responders. Finally, responsibilities relating to all aspects of the program must be clearly defined in writing.

To assure that the industrial hygiene program is running efficiently, periodic audits should be conducted. These audits should address all aspects of the program, including training, hazard communication, worksite analysis, hazard control, recordkeeping, and management commitment aspects. Most companies are organized so that health and safety audits are conducted by persons who are trained in the appropriate disciplines, but are not directly responsible for the programs being audited. This allows the auditors to maintain an objective and fresh perspective of the program and its effectiveness. These audits should be conducted in a cooperative spirit, to the largest extent possible. Identifying inadequacies in programs and finding constructive solutions must be a joint effort of auditors, the appropriate industrial hygiene professionals, and engineers within an organization.

VI. INCORPORATING INDUSTRIAL HYGIENE CONCERNS INTO PROCESS PLANNING

Close cooperation between the engineer and health and safety personnel is essential in designing a safe workplace. Several things must be considered during the new plant review process. Formal procedures should be developed for conducting these reviews, with the appropriate input from toxicology, industrial hygiene, environmental, and safety representatives. It is critical that this process be incorporated into the earliest planning and design stages of a project. Failure to do so may result in costly process modifications or retrofitting later in the project. The following issues should be considered as part of these new project reviews.

The toxicity of the raw materials and final products must be considered by the group or department that will be operating the process. A product that has extremely high toxicity, for example, may not have a viable long-term market. Potential regulations that may affect the production or sales of the product must be carefully reviewed before designing and building a production facility.

The engineer must design a process that will adequately control exposures to whatever materials are used or manufactured in the plant. In doing this, toxicologists and industrial hygienists must be consulted to determine the necessary controls for the raw materials and intermediates handled in each part of the process. The health professionals will summarize the toxicological concerns and work with the engineer to design the process appropriately.

During the evaluation of the toxicological profiles for the raw materials and products of the planned process, the industrial hygienist and engineer should review the permissible exposure limits, threshold limit values, or other acceptable concentrations for each chemical. These limits will assist the engineer in designing the process controls. In addition, many of the ventilation guidelines and manuals discussed previously incorporate safety factors and acceptable airborne limits into design criteria for ventilation systems.

Regulations must also be discussed with the appropriate departments early in the design phase. Environmental and other workplace regulations may affect the need for emissions controls and air cleaners. Many OSHA regulations, such as the expanded chemical-specific standards discussed previously, include specific requirements for permissible exposures, cleanup stations, and other issues that affect the design process. It is essential that these considerations be addressed during the design phase.

Other industrial hygiene concerns should also be addressed by the engineer. Work practices for maintenance, quality control sampling, and operations must be considered. For example, the level of controls designed into sampling ports will depend on the toxicity of the material being collected. Some operations may be designed so that much of the process is controlled remotely from a centralized control room. Again, the industrial hygienist will assist the engineer by providing input into these issues as appropriate.

VII. SUMMARY

This chapter reviewed the industrial hygiene process of recognizing, evaluating, and controlling workplace chemical hazards. The role of the process engineer was discussed, especially relative to the design of control technologies. The preferred methods for controlling exposures, including material substitution, process isolation and substitution, and ventilation, were described in detail. The importance of the engineer in designing processes is critical to establish and maintain a safe and healthy workplace.

REFERENCES

1. Occupational Safety and Health Administration (OSHA), *OSHA Analytical Methods Manual*, 2nd ed., OSHA, Salt Lake City, UT, 1990.
2. National Institute for Occupational Safety and Health (NIOSH), *NIOSH Manual of Analytical Methods*, Vols. 1–7, NIOSH, Cincinnati, OH, 1981.
3. American Conference of Governmental Industrial Hygienists (ACGIH), *Industrial Ventilation, A Manual of Recommended Practice*, 21st ed., ACGIH, Cincinnati, OH, 1992.
4. American Society of Heating, Refrigeration and Air-Conditioning Engineers (ASHRAE), *Pocket Handbook for Air Conditioning Heating Ventilation Refrigeration*, ASHRAE, Atlanta, GA, 1987.
5. G. D. Clayton, and F. E. Clayton, eds., *Patty's Industrial Hygiene and Toxicology*, Vol. 1, 4th ed., John Wiley & Sons, New York, 1991.
6. H. J. McDermott, *Handbook of Ventilation for Contaminant Control*, Ann Arbor Science Publishers, Ann Arbor, MI, 1981.
7. V. Mody, and R. Jakhete, *Dust Control Handbook*, Noyes Data Corporation, Park Ridge, NJ, 1988.

BIBLIOGRAPHY

AGIH, *Guide to Occupational Exposure Values—1990*, American Conference of Governmental Industrial Hygienists, Cincinnati, OH, 1990.

ACGIH, *Industrial Ventilation, A Manual of Recommended Practice*, 21st ed., American Conference of Governmental Industrial Hygienists, Cincinnati, OH, 1992.

AIHA, *Industrial Noise Manual*, American Industrial Hygiene Association, Akron, OH (latest edition).

AIHA, *Industrial Hygiene, A Guide to Technical Information Sources*, American Industrial Hygiene Association, Akron, OH, 1984.

A. Aitio, V. Riihimaki, and H. Vainio, *Biological Monitoring and Surveillance of Workers Exposed to Chemicals*, Hemisphere Publishing, Washington, DC, 1984.

R. W. Allen, M. D. Ells, and A. W. Hart, *Industrial Hygiene*, Prentice-Hall, Englewood Cliffs, NJ, 1976.

ASHRAE, *Pocket Handbook for Air Conditioning Heating Ventilation Refrigeration*, American Society of Heating, Refrigeration and Air-Conditioning Engineers, Atlanta, GA, 1987.

R. C. Baselt, *Biological Monitoring Methods for Industrial Chemicals*, 2nd ed., PSG Publishing, Littleton, MA, 1988.

G. D. Clayton and F. E. Clayton, eds., *Patty's Industrial Hygiene and Toxicology*, vol. 1, 4th ed., John Wiley & Sons, New York, 1991.

L. V. Cralley and L. J. Cralley, eds., *Industrial Hygiene Aspects of Plant Operations*, Vol. 1, *Process Flows*, Macmillan Publishing, New York, 1982.

L. V. Cralley and L. J. Cralley, eds., *Patty's Industrial Hygiene and Toxicology*, Vols. 1–3, 3rd ed., John Wiley & Sons, New York, 1979.

P. M. Eller, ed., *NIOSH Manual of Analytical Methods*, 3rd ed., National Institute for Occupational Safety and Health, Cincinnati, OH, February 1984.

J. T. Garrett, L. J. Cralley, and L. V. Cralley, eds., *Industrial Hygiene Management*, John Wiley & Sons, New York, 1988.

D. A. Halliday, ed., *Air Monitoring Methods for Industrial Contaminants*, Biomedical Publications, Davis, CA, 1983.

N. C. Hawkins, S. K. Norwood, and J. C. Rock, eds., *A Strategy for Occupational Exposure Assessment*, American Industrial Hygiene Association, Akron, OH, 1991.

C. D. Klaassen, M. O. Amdur, and J. Doull, eds., *Casarett and Doull's Toxicology*, 3rd ed., Macmillan Publishing, New York, 1986.

A. L. Linch, *Biological Monitoring for Industrial Chemical Exposure Control*, CRC Press, Cleveland, OH, 1974.

B. MacMahon and T. F. Pugh, *Epidemiology Principles and Methods*, Little, Brown & Co., Boston, 1970.

H. J. McDermott, *Handbook of Ventilation for Contaminant Control*, Ann Arbor Science Publishers, Ann Arbor, MI, 1981.

V. Mody and R. Jakhete, *Dust Control Handbook*, Noyes Data Corporation, Park Ridge, NJ, 1988.

NIOSH, *NIOSH Manual of Analytical Methods*, Vols. 1–7, National Institute for Occupational Safety and Health, Cincinnati, OH, 1981.

NIOSH, *NIOSH Pocket Guide to Chemical Hazards*, National Institute for Occupational Safety and Health, Cincinnati, OH, June 1990.

NIOSH, *The Industrial Environment—Its Evaluation and Control*, National Institute for Occupational Safety and Health, Cincinnati, OH, 1973.

J. B. Olishifski and E. R. Harford, eds., *Industrial Noise and Hearing Conservation*, National Safety Council, Chicago, 1975.

OSHA, *OSHA Analytical Methods Manual*, 2nd ed., Occupational Safety and Health Administration, Salt Lake City, UT, January 1990.

B. A. Polg, ed., *Fundamentals of Industrial Hygiene*, 3rd ed., National Safety Council, Chicago, 1988.

L. Sheldon, M. Umana, J. Bursey, W. Gutknecht, R. Handy, P. Hyldburg, L. Michael, A. Moseley, J. Raymer, D. Smith, C. Sparacino, and M. Warner, *Biological Monitoring Techniques for Human Exposure to Industrial Chemicals*, Noyes Publications, Park Ridge, NJ, 1986.

P. O. Warner, *Analysis of Air Pollutants*, John Wiley & Sons, New York, 1976.

4

Personal Protective Equipment

Thomas J. Ozimek, Daniel C. Steinmetz, and Edward J. Kerfoot
BASF Corporation, Wyandotte, Michigan

I. INTRODUCTION

Several types of personal protective equipment (PPE) are available and used to protect workers from physical, chemical, or biological hazards encountered in the work environment. This chapter will provide an overview of the PPE needed to provide adequate protection of the respiratory system, skin, eyes, and body; and the proper selection, use, and limitations of such equipment. The selection and use of PPE is based on the exposure route of the hazards that are or may likely be encountered in the work environment, and may be based on Occupational Safety and Health Administration (OSHA) regulations, consensus standards (e.g., American National Standards Institute; ANSI), or recommendations by professional organizations.

II. RESPIRATORY PROTECTION

A. Occupational Safety and Health Administration Requirements

Proper selection and use of respiratory protection is required in many situations and should not be used to replace engineering and work practice controls. The Occupational Safety and Health Administration (OSHA) is the agency that mandates the legal requirements for worker health and safety, including the selection and use of respiratory protection. Under OSHA, specific respiratory protection requirements are defined under 29 CFR 1910.134, including when such equipment is necessary to protect the health of the worker [1].

In controlling occupational disease in the work environment, acceptable engineering controls (e.g., enclosure or confinement of the operation or process by closed systems, general and local exhaust ventilation, and substitution of less toxic materials) and work practice controls should be used whenever feasible. When effective engineering and work practice controls are not feasible, respiratory protection must be used to reduce employee exposure below the permissible exposure limit (PEL).

Several groups, including the National Institute for Occupational Safety and Health (NIOSH) and the American National Standards Institute (ANSI) have provided additional important guidelines covering respiratory protection [2–5]

Because the standard has not been updated in over 20 years, the current OSHA Respiratory Protection Standard (29 CFR 1910.134) does not reflect state-of-the-art practices governing respiratory protection. ANSI Z88.2-1992 provides accepted practices for respirator users, including information and guidance on the proper selection, use and care of respirators, as well as recommended requirements for establishing and regulating respirator programs [4].

B. Minimum Requirements for an Acceptable Respiratory Protection Program

The minimum requirements for an acceptable respiratory protection program are defined under 29 CFR 1910.134(b). The following elements of the program are addressed:

a. Establishment of written standard operating procedures (SOPs) governing respirator selection and use
b. Proper respirator selection based on the hazard to which the worker is exposed
c. Instruction and training on the proper use of respirators, including their limitations
d. Procedures for cleaning respirators
e. Respirator storage
f. Respirator inspection and maintenance
g. Surveillance of work conditions
h. Enforcement and evaluation of the effectiveness of the program
i. Medical evaluation of respirator users
j. Use of approved or accepted respirators

To provide a complete understanding of respiratory protection, each of the minimum requirements will now be discussed in detail.

1. Standard Operating Procedures

To ensure that respirators are properly used, an effective respiratory protection program must include standard operating procedures. As part of these procedures, the type of respirator to be used and where the respirator will be required should be addressed. In addition, the limitations of the respirator and the conditions under which the respirator will be used are important and should be made part of the SOPs.

2. Respirator Selection

Proper respirator selection is an important part of the respiratory protection program and will be dependent on the identified or suspected hazard encountered in the work environment, the limitations of the respirator, and the actual workplace conditions.

The existing OSHA respiratory protection standard (29 CFR 1910.134) requires that proper respirator selection shall be made according to the guidance of ANSI *Practices for Respiratory Protection*, Z88.2-1969 [2]. A more detailed discussion on respirator selection will be provided later in this chapter.

3. Instruction and Training

All respirator users must be instructed in the proper selection, use, cleaning, maintenance, and storage of their respirators. It is very important that users understand the limitations of their respirators, as well as the proper use of these protective devices. The efficiency of the respirator in preventing exposures to the user depends on whether it is used and maintained correctly.

4. Cleaning Procedures

Each respirator should be cleaned and sanitized to ensure that the wearer is provided a clean respirator at all times. Respirators maintained for emergency use must be cleaned and disinfected after each use. Specific procedures for cleaning respirators should be described in the respirator program to ensure that users are comfortable wearing their respirators. Consult with the manufacturer for specific instructions covering respirator cleaning. ANSI Z88.2-1992 provides recommended procedures for cleaning and sanitizing respirators [4].

5. Respirator Storage

According to the OSHA respirator standard, specific requirements, including those related to respirator storage, must be adhered to by respirator users. Respirators must be stored to protect against dust, sunlight, heat, extreme cold, excessive moisture, or damaging chemicals.

6. Respirator Inspection

To provide the best protection to the respirator wearer, a regularly scheduled inspection program should be undertaken. Maintenance and care of respiratory protection should be included in the program. Manufacturer information also should be available and followed to ensure that respiratory protection provides the wearer with adequate protection.

7. Surveillance of Work Conditions

Workplace surveillance is necessary to ensure that the proper respirator is selected and used within the work environment. Whenever workplace conditions change (e.g., new hazards, process modifications) the respiratory protection program should be reviewed to reflect these changes.

8. Enforcement and Evaluation

The effectiveness of a respirator program is very important and depends on how the requirements of the program, including proper selection and use of respiratory protective devices, are enforced.

9. Medical Evaluation

Before assigning respirators, persons should be evaluated to determine that they are physically able to perform the work and use the respiratory protective equipment. If available, pulmonary function tests may be used to screen individuals before assigning respiratory protection.

10. Approved Respirators

According to 30 CFR Part 11, the National Institute for Occupational Safety and Health (NIOSH) and the Mine Safety and Health Administration (MSHA) have defined requirements and procedures to be followed by the respirator manufacturer when applying for respirator approval [6]. Any individual, organization, corporation, or association that designs, manufactures, assembles, or controls the assembly of respirators must obtain a certificate of approval for such respirators, as issued by NIOSH and MSHA, stating that the minimum requirements under 30 CFR Part 11 have been followed.

Respirators used in the workplace must be NIOSH/MSHA certified. However, in some situations a respirator may be used that is not certified, provided a variance or acceptance is obtained from OSHA. As part of the variance process, adequate protection for the hazards likely to be encountered must be ensured.

A complete list of respirators jointly approved by NIOSH and MSHA according to the provisions defined under Title 30, CFR, Part 11 are listed in the latest edition of the *NIOSH Certified Personal Protective Equipment List* [7]. Copies may be obtained from NIOSH, as follows:

Publications Dissemination, DTS
National Institute for Occupational Safety and Health
U.S. Department of Health, Education, and Welfare
4676 Columbia Parkway
Cincinnati, OH 45226

C. Respiratory Hazards

As described in Chapter 2, toxic materials may enter the body in several ways; through inhalation, through dermal contact, or by ingestion. Usually, inhalation provides the fastest and most direct route of entry into the body, owing to direct association with the circulatory system and its ability to sustain life processes by providing oxygen to the body. According the ANSI Z88.2-1992, these respiratory hazards can be classified as follows:

1. According to their biological effect
   a. Gas and vapor contaminants
   b. Particulate contaminants
   c. Combination of gas, vapor, and particulate contaminants
2. According to their properties, which influence respirator selection
   a. Inert
   b. Acidic
   c. Alkaline
   d. Organic
   e. Organometallic
   f. Radionuclides
   g. Aerosol contaminants
3. Classification and description of respirators by mode of operation
   a. Air-purifying
   b. Atmosphere-supplying
   c. Combination atmosphere-supplying and air-purifying

   A further discussion of classification based on modes of operation may be found in Sec. II.D. of this chapter.
4. Classification of respiratory hazards according to their biological effect
   a. Gas and vapor contaminants
      - Simple asphyxiants
      - Irritants
      - Sensitizers
      - Reproductive toxins
      - Chemical asphyxiants
      - Anesthetics
      - Systemic poisons
      - Carcinogens
   b. Particulate contaminants (dust, fog, fume, mist, smoke, and spray)
      - Nuisance dusts
      - Pulmonary fibrosis-producing particulates
      - Reproductive toxins
      - Carcinogens
      - Chemical irritants
      - Systemic poisons
      - Sensitizers
      - Febrile reaction-producing (e.g., fumes of copper and zinc)
   c. Combination of gas, vapor, and particulate contaminants

D. Classes of Respiratory Protection

Respiratory protection falls into three major classes, based on how the equipment operates: air-purifying, atmosphere-supplying, and combination atmosphere-supplying and air-purifying. Depending on whether or not a hazardous atmosphere exists, the appropriate class of respiratory protection can be selected. According to ANSI Z88.2-1992, a *hazardous atmosphere* is defined as a condition where a contaminant(s) exceeds an exposure limit [8,9], or where an oxygen-deficient condition exists.

1. Air-Purifying

Air-purifying respirators are divided into several categories, depending on the respiratory hazard against which they have been selected to protect. These categories include vapor- and gas-removing (chemical cartridge or canister) respirators, filter-type or particulate-removing respirators, and combination particulate and cartridge respirators. Air-purifying respirators will not protect against oxygen-deficient atmospheres, during concentrations immediately dangerous to life or health (IDLH), or against materials that have poor warning properties (e.g., odor, taste, or irritation at concentrations above the permissible exposure limit). The *IDLH* is a term defined by NIOSH "as the maximum concentration from which, in the event of respirator failure, one could escape within 30 minutes without a respirator and without experiencing any escape-impairing (e.g., severe eye irritation) or irreversible health effects."

For each of the categories just defined, further subcategories include full-facepiece respirator, quarter-mask and half-mask facepiece respirator, and mouthpiece respirator. A full-facepiece respirator (Fig. 1) should be selected where eye protection is required in addition to respiratory protection. Mouthpiece respirators must be used only for emergency escape situations and are not recommended for any prolonged usage.

For each category, the maximum concentration of a contaminant for which the air-purifying respirator is approved is dependent on the efficiency and capacity of the cartridge, canister, or filter, and the facepiece-to-face seal of the respirator wearer. These concentrations are identified by the manufacturer or listed on the labels on the cartridge or canister.

Vapor- and gas-removing respirators will protect against specific contaminants and not against particulates. Each respirator will have an approval number indicating the contaminant or types of contaminant the device will protect against. The principle of these respirators is based on cartridges, often containing charcoal, that adsorb toxic gases and vapors.

Particulate- or filter-type respirators are designed to protect against particulates only and offer no protection against gases and vapors. Filter-type respirators can protect against various airborne particulates, including dusts, mists, and fumes. However, not all filter respirators will protect against all airborne particulates. One should consult with the manufacturer, or review the latest edition of the NIOSH certified equipment list for specific approvals. Within the particulate type of respirators, only high-efficiency particulate respirators (HEPA) must be used for protection against asbestos.

Gas masks (Fig. 2) are air-purifying devices that have applications for removing specific contaminants from the air and are not to be used in oxygen-deficient or IDLH atmospheres. Several different types of gas masks have been approved, including supersize, industrial size, and chin type. Each canister must be marked with a specific label and color-coded, as defined by ANSI K13.1-1973 and described under the OSHA respiratory protection standard (29 CFR 1910.134). In

Figure 1 Full-facepiece respirator to be selected where eye protection is required. (Courtesy North Safety Equipment.)

Figure 2 Gas masks provide protection against organic vapors and gases. (Courtesy MSA.)

addition, each canister must have a warning label that gas masks should not be used in oxygen-deficient atmospheres [1].

Combination particulate- and vapor/gas-removing respirators are also available from some manufacturers. These devices have limitations similar to the individual-type respirators and should be used only for the hazard(s) that they have been approved to protect against, as designed by the manufacturer.

Powered air-purifying respirators are available for protection against particulates, gases, and vapors, or a combination of particulates, gases, and vapors. Powered air-purifying respirators (usually operated by a battery pack) provide purified air (by a blower) through a respirator inlet after passing across an air-purifying element. The element may be a filter, chemical cartridge, or combination unit or canister. Powered air devices must provide at least 4 ft^3/min (cfm) of air to a tight-fitting facepiece and at least 6 cfm to a loose-fitting helmet or hood to meet NIOSH/MSHA certification requirements [6]. The major advantage of powered air-purifying respirators is that they supply air at positive-pressure to the facepiece, thereby minimizing outward leakage from the facepiece.

2. Atmosphere-Supplying

Atmosphere-supplying respirators fall into three categories: self-contained breathing apparatus (SCBA), supplied-air respirators, and combination airline respirators with auxiliary self-contained air supply. Atmosphere-supplying respirators provide protection for oxygen-deficient atmospheres and toxic atmospheres, since the breathing atmosphere is independent of ambient conditions. Usually, these respirators provide no protection against those toxic materials that are strong skin irritants or against materials that may be absorbed through the skin. Occasionally, atmosphere-supplying respirators may be used in IDLH situations, provided an emergency egress cylinder is available. Atmosphere-supplying respirators can be used for protection against materials that lack adequate warning properties (e.g., isocyanates), owing to the independent supply of air.

The self-contained breathing apparatus (SCBA) requires the user to carry a breathing atmosphere (Fig. 3). Protection is determined by the amount of air or oxygen in the apparatus, the atmospheric pressure, and the type of work performed. Some units have very short service times (less than 15 min) and should be used only for escape from an unfit atmosphere. The SCBA units have several limitations, including their weight or bulk, limited service time, and maintenance and training requirements.

Several categories of SCBA devices exist, including closed-circuit SCBA, open-circuit units, demand and pressure-demand units. Demand-flow units deliver airflow during inhalation and may operate in a negative-pressure mode during exhalation. The SCBA units in the demand mode are not permitted for use in IDLH atmospheres. Pressure-demand respirators operate under positive-pressure during

Figure 3 A pressure-demand, self-contained breathing apparatus (SCBA) is to be used in oxygen-deficient atmospheres or where IDLH conditions exist. (Courtesy Scott Aviation.)

both inhalation and exhalation and may be used in IDLH atmospheres. A complete description of the types and limitations of SCBA devices may be found in ANSI Z88.2-1992 [4].

Self-contained breathing apparatus is one of the most important types of protective equipment used during emergencies. During emergency response activities, a SCBA affords respiratory protection for atmospheres that may be oxygen-deficient or IDLH. This optimum protection against toxic gases and oxygen-deficient atmospheres is due to the wearer having an independent-breathing air supply into which no outside air is admitted. In addition to emergency response operations, pressure-demand SCBA units may be used during confined-space entry rescue.

Before using SCBA units, a complete training program for the cleaning, maintenance, inspection, and use of these devices must be developed and implemented. A detailed discussion on self-contained breathing apparatus training is found in the *Respiratory Protection: A Manual and Guideline*, published by the American Industrial Hygiene Association (AIHA) [9].

3. Supplied Air Respirators

Airline respirators (sometimes referred to as type C supplied air respirators) can be used in many situations for which the airborne hazard is not IDLH. Airline respirators come in many different types (Fig. 4), including half-mask, full facepiece, hood, or helmet, to which breathing air is supplied. Airflow types fall into the following two categories: continuous-flow and pressure-demand. Continuous-flow units regulate the respirator under positive-pressure, depending on the work rate. On the other hand, pressure-demand units operate under positive-pressure at moderately high work rates under limited air quantity. Demand-flow airline respirators are available, but, are not recommended to provide the same protection as the pressure-demand SCBA respirator and should not be used in IDLH situations.

A complete classification and description of respirators by mode of operation is found in ANSI Z88.2-1992, which also includes a detailed description of oxygen-deficiency and IDLH conditions. As with many types of respirators, airline respirators have some limitations. These devices may not be used in IDLH atmospheres unless equipped with an auxiliary tank (carried by the wearer) that can be easily activated for escape only. Airline respirator certification requirements are defined under Section 30 CFR Part 11 by NIOSH [6].

Several advantages exist for air-supplied respirators versus negative-pressure air-purifying respirators. These include higher protection factors owing to the positive-pressure mode, protection against a wide range of airborne contaminants, no limitations, as with cartridges and filters, and protection against toxic materials with poor-warning properties (e.g., isocyanates). Air-supplied respirators can also be used under IDLH situations, provided an auxiliary tank is supplied.

Figure 4 Supplied-air respirators provide protection in many operations including welding and paint spraying. (Courtesy of Racal Health & Safety, Inc.)

4. Air Quality

According to the OSHA respiratory protection standard, 29 CFR 1910.134(d) states that breathing air supplied to respirators from cylinders or compressors must meet the requirements of the Compressed Gas Association Commodity Specification G-7.1-1966. However, in 1989 the association outlined new requirements as defined below [10]:

Oxygen content (v/v)	19–23% (atmosphere air)
Hydrocarbon (condensed)	5 mg/m^3, maximum
Carbon monoxide	10 ppm, maximum
Carbon dioxide	1,000 ppm, maximum

Although the current OSHA respiratory protection standard references the 1966 specifications, it is recommended that the foregoing specifications be followed. ANSI Z88.2-1992 provides further information on respirable air and oxygen for self-contained breathing apparatus and supplied-air respirators.

5. Additional Requirements

In addition to the breathing air quality, additional requirements for air-supplied respirators are described under 29 CFR 1910.134(d), ANSI Z88.2-1992, and NIOSH 30 CFR Part 11 as summarized below:

a. Construct and situate compressors to avoid entry of contaminated air into the system and include the use of air-purifying sorbent beds and filters to ensure breathing air quality.

   Note that portable compressors are sometimes used (Fig. 5) to provide clean air to respirator wearers working in contaminated areas. The location of these portable compressors is extremely important and care should be taken to avoid areas where internal combustion emissions may occur, or adjacent to spraying operations from which solvent and paint emissions could enter these units.

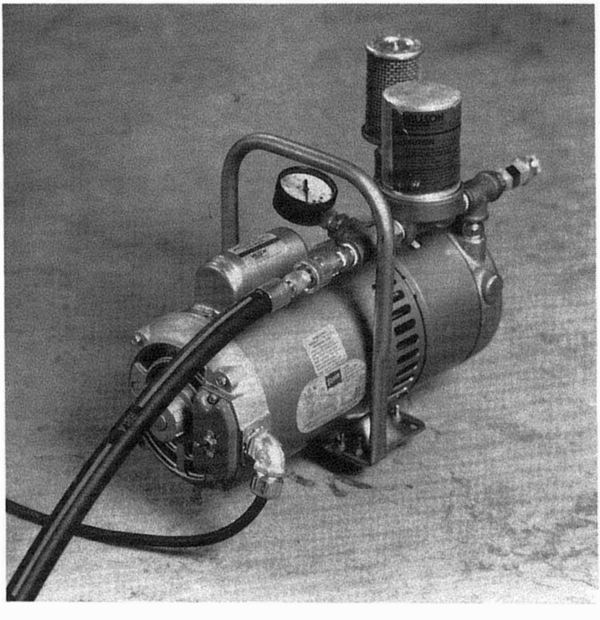

Figure 5 Portable breathing air compressor that provides clean air to respirator wearers working in contaminated areas. (Courtesy Wilson Safety Products.)

b. A receiver of sufficient capacity should be installed to enable the respirator wearer time to escape from contaminated atmosphere should the compressor fail. Alarms should also be installed on the system to warn of compressor failure and overheating.

c. Oil-lubricated compressors (Fig. 6) should be equipped with a high-temperature or carbon monoxide alarm, or both. The OSHA requirements state that if only a high-temperature alarm is installed, then the air must frequently be tested for carbon monoxide to ensure that grade D breathing air quality is provided.

d. Airline couplings must be incompatible with outlets for other gas systems to prevent inadvertent servicing of airline respirators with nonrespirable gases.

e. Breathing gas containers must be clearly marked "breathing air" in accordance with regulatory requirements.

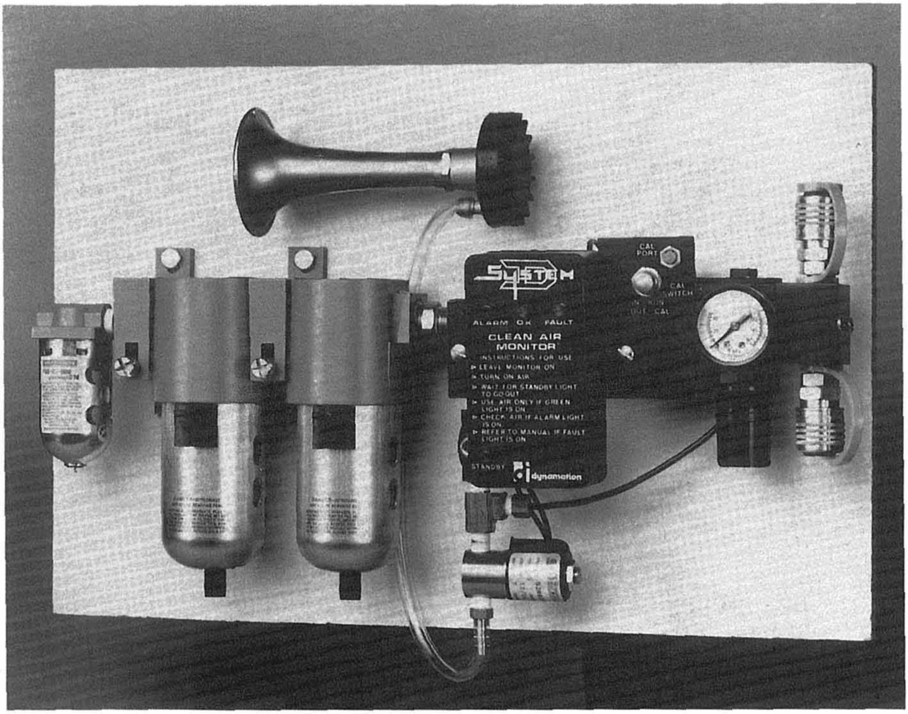

Figure 6 Oil-lubricated compressors must be equipped with high-temperature or CO alarm along with filters to provide grade D breathing air. (Courtesy Dynamation, Inc.)

f. NIOSH requires that airflow requirements for continuous-flow respirators be at least 4 cfm for a tight-fitting facepiece and at least 6 cfm for hoods and helmets. In no case should each face covering exceed 15 cfm.
g. Maximum hose length on air-supplied respirators approved by NIOSH/MSHA is 300 ft, with a maximum inlet pressure of 125 $lb/in.^2$ (psi) where the hose is connected to the air supply. Respirator approval includes the airline, which must meet the foregoing requirements for each respirator manufacturer.
h. Respirator parts, including the hose, must not be transferred from one manufacturer to another or NIOSH/MSHA approval will be voided.

6. Combination Airline Respirators with Auxiliary Self-Contained Air

Such units include both an airline respirator and a self-contained breathing supply to be used for escape.

Entry into hazardous IDLH atmospheres require that the emergency egress cylinder be approved for escape. When entering into IDLH atmospheres, an auxiliary self-contained supply must be approved to supply air for at least 15 min to the respirator wearer.

7. Combination Atmosphere-Supplying and Air-Purifying Respirators

The use of combination atmosphere-supplying and air-purifying respirators depends on the respiratory hazard likely to be encountered. The overall capabilities and limitations of these units are related to the air-purifying mode, since it provides the greater limitations.

8. Other Respirator Types

Mouthpiece respirators (Fig. 7) must be used only for escape applications. These units operate by using a nose clamp to prevent nasal breathing, thereby preventing the detection of the contaminant by odor. The capabilities and limitations (escape only) must be conveyed to all individuals who may require their use.

E. Respirator Selection

One of the most important parts of any respiratory protection program is proper selection of the correct respirator. As was mentioned earlier in this chapter, the OSHA respiratory protection standard 29 CFR 1910.134 requires that respirator selection be based on the hazards to which workers are exposed. This process requires that ANSI Z88.2-1969 be consulted for guidance on respirator selection. The ANSI Z88.2-1969 has been replaced with ANSI Z88.2-1980 and, more recently, with ANSI Z88.2-1992.

In addition to the OSHA respirator standard, specific selection guidelines are mandated under several OSHA expanded standards (e.g., inorganic lead, 1910.1025; benzene, 1910.1028; asbestos, 1910.1001, 1926.58; and others) that specify the required respirator based on the airborne concentrations or condition

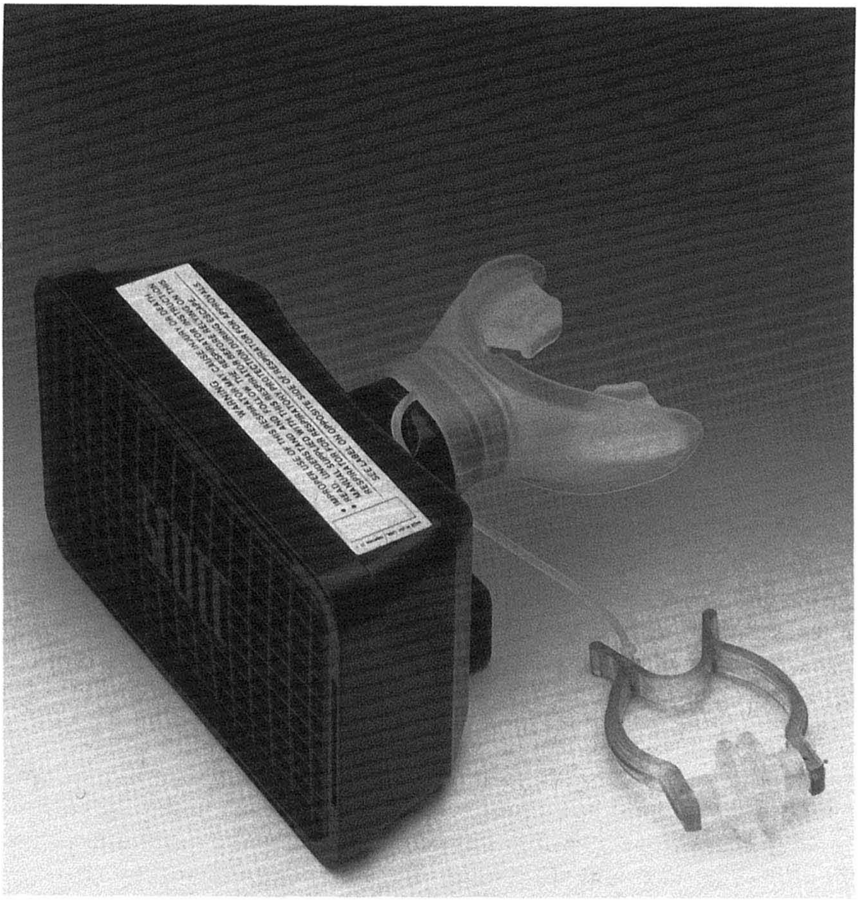

Figure 7 Mouthpiece respirator can be easily worn on the belt clip and should be used only for emergency escape. (Courtesy Scott Aviation.)

of use. Refer to Table 1 for an example of an OSHA respirator selection guide [1].

1. Selection Criteria

To select the correct respirator, the following process should be considered:

a. Characterization of the nature of the respiratory hazard encountered or likely to be encountered must be evaluated. Conditions that result in an oxygen-deficient or IDLH atmosphere require specific respirator selection. In addition, some materials (e.g., isocyanates) have relatively poor warning properties, which may limit the type of respirator selection.

Table 1 Example of OSHA Respirator Selection Guide: Respiratory Protection for Lead Aerosols

Airborne concentration of lead or condition of use	Required respirator [1]
Not in excess of 0.5 mg/m^3 (10+ PEL)	Half-mask, air-purifying respirator equipped with high-efficiency filters [2,3]
Not in excess of 2.5 mg/m^3 (50+ PEL).	Full facepiece, air-purifying respirator with high-efficiency filters [3]
Not in excess of 50 mg/m^3 (1000+ PEL)	(1) Any powered air-purifying respirator with high-efficiency filters [3]; or (2) half-mask supplied-air respirator operated in positive-pressure mode [2]
Not in excess of 100 mg/m^3 (2000+ PEL)	Supplied-air respirators with full facepiece, hood helmet, or suit, operated in positive-pressure mode
Greater than 100 mg/m^3, unknown concentration or fire fighting	Full facepiece, self-contained breathing apparatus perated in positive pressure mode.

Source: 29 CFR 1910.1025 ([f][2][:]).

b. Evaluation of the characteristics of the hazardous operations or process to determine the types of hazards that may be encountered during both normal operations and emergency situations. Each operation should be reevaluated when the process changes, or new materials are added that may result in new hazards. Materials, including raw materials, final products, and by-products, must be evaluated to determine the extent of the respiratory hazard likely to be encountered.

c. Review of the material safety data sheets (MSDSs) for information on physical and chemical properties, exposure limits, decomposition products, reaction products, recommended PPE selection, and spill response information.

d. Recognition and evaluation of the respiratory hazard, including initial monitoring of potential airborne contaminants. All normal, emergency, and rescue operations should be evaluated to identify specific contaminants (including concentration), as well as the potential for oxygen-deficient and IDLH atmospheres [11].

e. Identification of specific job tasks that require respirator use, based on an exposure assessment strategy, including a review of industrial hygiene-monitoring data. In addition, respirator use time must be taken into account for comfort purposes related to routine use versus emergency and rescue operations that may be encountered.

f. Identification of compressed air for supplying breathing air during the initial design stage of new process construction or during the modification of existing process operations.
g. Identification of hazardous areas, including specific locations where respirable air can be located for use during emergency situations.
h. Evaluation of medical conditions, given the degree of worker activity (work load, thermal conditions, physical status of workers) before selecting respiratory protection.
i. Consideration of limitations of the various respirators (air quality, oxygen deficiency) to ensure adequate respiratory protection.
j. Consideration of respirator protection factors and respirator fit to achieve a satisfactory fit for individuals required to wear respiratory protection.
k. Consideration of employee acceptance during the selection process, to ensure that a satisfactory respirator protection program is achieved. Respirators must be comfortable for them to be worn effectively.

2. Respirator Decision Logic

To provide guidance in respirator selection, several groups, including OSHA, ANSI, and NIOSH, have provided information covering respirator selection. A respirator decision logic was adopted through a joint NIOSH/OSHA Standards Completion Program (1976), and updated in 1987, to ensure that technical accuracy and uniformity is achieved when selecting respirators [5]. This joint program provided defined criteria to be used to support to respirator selection decision process. Additional selection information (Table 2) in accordance with ANSI Z88.2-1969 (updated 1980) is provided by the respiratory selection decision tree [12].

As always, the decision logic used in the respirator selection process should be based on consultation with trained professionals knowledgeable about the hazard(s) likely to be encountered in the workplace, as well as an understanding of respiratory protective equipment through information provided by the manufacturer.

F. Fit Testing

A respirator fit test is required to obtain a satisfactory fit with a respirator. The OSHA respiratory protection standard, 29 CFR 1910.134(c)(5) states that respirators shall be properly fitted and tested for their facepiece-to-face seal. According to 29 CFR 1910.134(e)(5)(i), respirators shall not be worn when conditions prevent a good facial seal. Conditions that may interfere with a good facial seal include growth of beard, sideburns, skull cap projections, and temple pieces on glasses.

Respirator fit testing is divided into two major classes: quantitative (QNFT) and qualitative (QLFT) respirator fit testing. Until ANSI Z88.10 is published, fit

Table 2 Respiratory Selection Decision Tree from OSHA Technical Manual

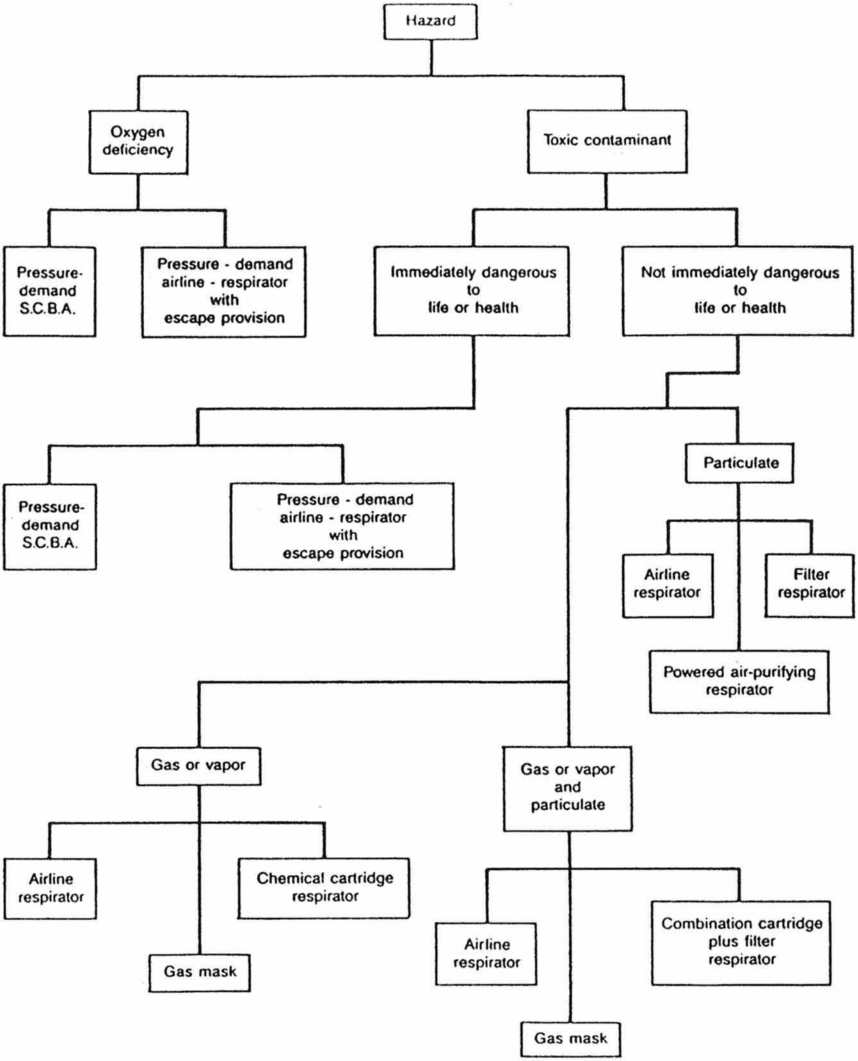

Source: Olin Corporation, *Respiratory Protection Manual.*

test should follow the protocol given in the OSHA asbestos standard, 29 CFR 1910.1001. The results of each fit test conducted will provide information on the type of respirator to select, including makes and models for each respirator wearer. Each wearer of a negative-pressure respirator should be fit-tested annually, unless fit-testing is required more frequently, as described under specific OSHA standards.

As part of the respirator fit-testing process the following should be followed:

a. Respirator selection should include several different types and sizes of respirators to allow the user to find one that provides a comfortable fit.
b. The respirator wearer shall be trained on how to properly wear the respirator and how to adjust the respirator, including strap tension.
c. A respirator shall never be fit-tested if the wearer has conditions (facial hair) that may interfere with sealing the surface of the respirator.
d. Any safety equipment, including safety glasses or goggles, that will be worn during normal respirator use, must also be worn during fit-testing.
e. Before fit-testing respirators, the wearer should be instructed on how to conduct positive and negative fit checks under field conditions, as recommended by ANSI Z88.2-1992.

To ensure that the respirator is properly seated to the face, a positive and negative air-pressure fit check shall be conducted each time the wearer dons or adjusts the respirator. These field fit checks are described as follows:

1. Positive-Pressure Test

A positive-pressure test can be conducted on negative-pressure mode respirators that have an exhalation valve or breathing tube. This test cannot be performed on most disposable respirators and valveless respirators. The following instructions provide a brief description of the positive-pressure test.

a. Close off the exhalation valve or breathing tube or both, and instruct wearer to exhale gently.
b. If the respirator has been properly donned, a slight positive-pressure buildup inside the facepiece will occur without any outward leakage at the face seal.
c. Before conducting this test method, some respirators may require that the exhalation valve be removed and replaced after the test is completed. Care must be taken to avoid disturbing the fit of the respirator.

2. Negative-Pressure Test

A negative-pressure test can be conducted on negative-pressure mode tight-fitting respirators (air-purifying and atmosphere-supplying respirators) equipped with tight-fitting respirator inlet coverings and breathing tubes that can be squeezed or blocked at the air inlet. The procedures to follow when conducting a negative-pressure field test include

a. Close off the inlet opening of the respirator's canister(s), cartridge(s), or filter(s) by covering the inlet or the blocking tube so that air cannot pass through.
b. The respirator wearer shall inhale gently and hold breath for 10 s.
c. The respirator has been properly donned and the exhalation valve and facepiece are not leaking if the facepiece collapses slightly and no onward leakage of air into the facepiece is detected.

3. Qualitative Fit-Testing

Qualitative fit-testing is based on exposing the respirator wearer to irritant smoke, an odorous vapor, or another suitable test agent. During this type of fit test, the respirator wearer must be equipped with the appropriate air-purifying element necessary to remove the test agent. Qualitative fit tests rely on the ability of the respirator wearer to detect an odor or taste that may penetrate the respirator. The advantage of this type of fit test is that it is easy to administer and relatively inexpensive. One disadvantage is that the test is subjective; therefore, judgment is involved in interpreting the test results. In addition, since sensitivity varies from individual to individual, this test may produce questionable results.

Several procedures are available for performing qualitative respirator fit tests, such as the irritant smoke test, the odorous vapor test (e.g., isoamyl acetate), and the sodium saccharin aerosol fit test. Detailed procedures for qualitative fit testing are described in the OSHA asbestos standard, 29 CFR 1910.1001 [1].

4. Quantitative Fit-Testing

Quantitative respirator tests involve exposing the respirator wearer to a relatively nontoxic test atmosphere (aerosol, vapor, or gas test agent). By measuring the penetration of the test agent into the respirator, one can quantitatively determine the amount of leakage into the respirator from the test atmosphere. Each respirator undergoing a quantitative fit test is equipped with a sampling probe connected to an instrument that allows measurement of the penetration of the test agent. As with qualitative fit-testing, the respirator wearer must be equipped with the appropriate air-purifying element necessary to remove the test agent. When using an aerosol as a test agent, a high-efficiency filter is acceptable, whereas an appropriate cartridge or canister is sufficient to remove a vapor or gas from the test atmosphere. Both air-purifying and atmosphere-supplying respirators can undergo quantitative fit-testing.

The major advantage of quantitative fit tests is the ability to calculate fit factors by measuring respirator fit without relying on a person's sensitivity or cooperation. In addition, most quantitative fit test units are relatively easy to use, although one disadvantage may be the high initial cost.

As described under the OSHA asbestos standard, 29 CFR 1910.1001, specific test exercises, test atmospheres, and test chambers shall be used when carrying out quantitative respirator-fitting tests. Both OSHA and NIOSH require quantitative testing to be conducted in some situations depending on the desired protection factor one wishes to attain. Several manufacturers of quantitative fit test equipment employ the use of sodium chloride (NaCl), corn oil, or a dioctylphthalate (DOP) oil mist-generating systems. One new system, the TSI Incorporated Portacount Respirator Fit Tester (Fig. 8), uses portable detectors to measure aerosol penetration into the facepiece. This device involves particle counting versus measuring mass concentration. The Portacount unit also can be downloaded into a personal computer (PC) through use of a software program supplied by the manufacturer.

Both quantitative and qualitative test protocols specify that the respirator wearer perform a series of exercises in the test environment, as follows:

a. Normal breathing
b. Deep breathing
c. Turning head side to side
d. Moving head up and down
e. Talking
f. Grimace
g. Bending over or jogging in place
h. Normal breathing

As part of the overall respiratory protection program, fit test records, including results of the respirator fit test, must be maintained.

Given the quantitative fit-testing results, the amount of penetration of a test agent into the respirator worn in a test atmosphere can be used to determine a protection factor for the specific respirator worn during the test, as described in the following equation:

$$\text{Protection factor (PF)} = \frac{100}{S/N}$$

Where S = sum of average peak concentration for all exercises (in percent) and N = number of exercises.

G. Protection Factors

Protection factors are a measure of how effective a particular respirator is for the wearer and is important in the respirator selection process. ANSI-Z88.2-1992, defines the *assigned protection factor* (APF) as the expected workplace level of respiratory protection that would be provided by a properly functioning respirator, or a class of respirators to properly fitted and trained users [4].

Protection factors have been assigned by NIOSH [5] based on studies conducted at various laboratories, including the Los Alamos National Laboratory. In addi-

Figure 8 Quantitative fit test unit. (Courtesy TSI Incorporated.)

tion, ANSI standard Z88.2-1992 provides a reference source for assigned protection factors [4]. Finally, the protection factors used by OSHA (see Table 1) may be different from either of the foregoing sources [1].

A respirator protection factor provides some measurement of protection afforded by the respirator to the wearer. The maximum concentration of a hazardous substance for which the respirator can be safely worn is determined by multiplying the assigned protection factor of a particular respirator type times the permissible exposure limit (PEL).

H. Special Considerations

Special issues that should be addressed when selecting respiratory protection include

a. Respiratory protection protects the individual only from the inhalation hazard and does not provide protection for skin absorption of materials, which may occur during splashes or spills. A complete discussion of chemical protective clothing (CPC) is found in Sec. III of this chapter.
b. Adequate eye protection must be provided through use of a full-facepiece respirator for materials that produce eye irritation.
c. Chemical cartridges or canisters used with air-purifying devices have limitations that must be noted in determining situations during which such devices may be used.
d. Materials (e.g., isocyanates) with poor-warning properties (odor or irritation threshold of substance is many times greater than the PEL) require specific respiratory protection, such as atmosphere-supplying respirators. The NIOSH/MSHA approved organic vapor chemical cartridge respirators and gas masks should not be used against organic vapors with poor-warning properties.
e. Respirator capabilities and limitations for use in IDLH situations must be evaluated to ensure the proper respirator is selected [11].
f. The use of corrective lenses, protective eyewear, faceshields, and other devices must in no way interfere with the seal of the respirator to the wearer. Contact lens use should be evaluated based on current state-of-the-art practices.
g. Specific tasks (confined-space entry) may require communications to be maintained while wearing respiratory protection, which may adversely affect the facepiece seal. In these situations, speech transmission devices may be used to transmit sound without affecting the facepiece seal.
h. Confined-space entry may result in oxygen-deficient or IDLH conditions, which may limit the selection of respiratory protection. By developing and implementing safe procedures (e.g., ventilation) for confined-space entry, the degree of respirator selection may be reevaluated, depending on oxygen requirements and whether or not an IDLH situation exists or is likely to exist. Specific respirator use and selection for conditions encountered during

confined-space entry is covered under ANSI Z88.2-1992 and ANSI Z117.1-1989 [4,13].

i. Extremes in temperature, both high and low, may impose additional stress to the respirator wearer. In low-temperature environments, fogging of the lens or freezing or improper sealing of the respirator may occur, resulting in poor respiratory protection. Devices with nose cups, as well as antifog compounds are available, through various manufacturers, that can be used to prevent fogging. A high-temperature environment may also impose additional stress to the respirator wearer. Air-supplied respirators are recommended for use in high-temperature environments, which may also be equipped with a vortex tube to supply cooled air to the wearer. Manufacturer's instructions should be followed when using airline respirators with vortex tubes to ensure that adequate protection is provided.

I. Medical Concerns

American National Standard for Respiratory Protection—Respirator Use—Physical Qualifications for Personnel (ANSI Z88.6 - 1984) has established guidelines for medical examination of personnel required to wear respirators [14]. This standard provides guidance and information to the examining physician and other professionals on the types of respirators, special physical demands, and the environmental conditions related to respirator usage. In addition, this standard provides information on how to utilize a medical history; medical examination requirements, including frequency; and special disqualifying conditions, as related to the ability to wear a respirator.

J. Summary

Respiratory protection should be used in situations for which engineering controls are not feasible, where workpractice controls do not reduce employee exposures below recommended exposure limits, during maintenance activities, and during emergencies when unknown concentrations of airborne contaminants may be generated. For respiratory protection to be effective, an ongoing respiratory protection program must be developed and implemented, including proper selection, use, and training on respiratory protection. Specific guidelines for an effective respiratory protection program can be found under ANSI Z88.2-1992, or the OSHA respirator standard (29 CFR 1910.134) [4,1].

III. PROTECTIVE CLOTHING

A. Overview

Protective clothing is used to prevent potentially harmful chemicals, physical hazards (extreme temperature, radiation), and biological hazards from contacting and, in some instances, entering the body. The National Institute for Occupational

Safety and Health (NIOSH) has included dermatitis on its top-ten list of leading occupational health diseases. The selection of chemical protective clothing (CPC) is a very difficult task owing to the lack of permeation or breakthrough data for many chemicals. Many times, professional judgment is required by the health and safety professional to ensure that protective clothing properly protects the worker, through an evaluation of the design and performance of such equipment.

Protective clothing and equipment come in a wide range of types and materials, depending on the hazard to which one is likely to be exposed in the work environment. Some operations (emergency response, hazardous waste operations) may require full-body protective clothing, whereas other tasks may require boots, coveralls, or protective gloves. Depending on the type of chemical hazard encountered, some types of material may be more protective than others. On the other hand, physical and biological hazards may require less chemical-resistant materials, but still require full-body protection, depending on the hazards encountered.

B. Occupational Safety and Health Administration Requirements

General OSHA requirements covering protective equipment and clothing are specified under 29 CFR 1910.132 [1]. The standard states that such protective equipment and clothing be provided, used, and maintained in a sanitary and reliable condition wherever it is necessary, by reason of hazards encountered, to protect any part of the body from injury or impairment through absorption, inhalation, or physical contact from chemical, physical, and biological hazards. OSHA also addresses chemical protective clothing in its Hazardous Waste Operations and Emergency Response Standard (29 CFR 1910.120), which requires a formal PPE program, similar to its respiratory protection program [1].

The Environmental Protection Agency (EPA) has defined four levels of protection (i.e., A, B, C, and D) to be used for selecting appropriate personal protective equipment (PPE) during hazardous waste operations and emergency response activities. Proper selection of PPE is critical during such activities when trying to protect workers from the specific hazards encountered during these hazardous situations.

As required under the OSHA HAZWOPER standard (29 CFR 1910.120) a PPE program is required to be prepared as part of a written health and safety program. A further discussion of the various EPA levels of protection, including guidelines that can be used in the selection of the appropriate PPE, can be found in 29 CFR 1910.120—Appendix B.

C. Chemistry of Protective Clothing

A comprehensive discussion on the chemistry of protective clothing is beyond the scope of this book; however, some knowledge of such chemistry is necessary to understand chemical permeation. Protective materials exist in several structures and include pure polymers, copolymers, laminates of polymers, or polymer blends. The interaction between a solvent and polymer is an important concept related to permeation rate.

Before a solvent diffuses through a polymer, it must first interact with the polymer chains in the material. The ability of a solvent to interact with a polymer structure is dependent on several factors, including cohesive energy (the force holding liquid or solid molecules together), the size of the solvent molecules, and the openings in the polymer layer. As molecules move across the polymer, a concentration gradient develops that relates to diffusion across the membrane from high concentration to low concentration.

Additional interaction between the solvent and the polymer in protective clothing material include degradation, penetration, and permeation. A complete discussion of the chemistry of protective clothing may be found in the *Chemical Protective Clothing* reference text published by the American Industrial Hygiene Association (AIHA) [15].

D. Protective Clothing Test Criteria

Proper selection of various types of CPC can be made only when adequate performance test data are available to verify chemical resistance and permeation. Test methods must be used that will allow an accurate reflection of workplace conditions, such as temperature, humidity, chemical interaction, and concentration.

Previously, many chemical protective clothing manufacturers and users relied on simple immersion tests to obtain information on chemical resistance. However, large amounts of this data are inaccurate and do not reflect the best choice between actual chemical exposure and materials in a work environment.

Currently, manufacturers, users, and government agencies address chemical protective clothing performance through the American Society for Testing and Materials (ASTM) Committee F23. In addition, governmental organizations, including NIOSH have developed programs evaluating the performance of protective materials to be selected against carcinogenic chemicals. Other groups, including ANSI and the National Fire Protection Association (NFPA) have shown support for standardizing test methods for protective clothing. The NFPA 1993 standard, Support Function Protective Garments for Hazardous Chemical Operations, specifies minimum documentation, design criteria, performance criteria, and test methods for protective garments used by personnel in support functions during hazardous chemical operations [16].

The current test methods being used to evaluate protective clothing for chemical and physical hazards resistance are being developed in the laboratory. Specific ASTM test methods currently being developed or available for testing chemical protective clothing are described in Tables 3 and 4. A test cell is used to collect permeation test data on different materials exposed to a specific hazard-

Table 3 Physical Property Test Methods

Property	Test method (ASTM)
Abrasion resistance[a]	D3389
Blocking	D1893
Brittleness	D2137
Bursting strength	03786
Coating adhesion	D751
Cut resistance[a]	F23.20.01[b]
Durometer	D2240
Flammability[a]	D568
Flex fatigue[a]	D671 (plastics) D430 (elastomers)
Hydrostatic resistance	D751
Low-temperature bending	D2136
Ozone resistance	D3041
Penetration resistance	F903
Puncture propagation tear	D2582
Puncture resistance[a]	F23.20.02[b]
Seam strength[a]	D751
Stiffness[a]	D1043 (plastics) D1053 (elastomers)
Tear strength[a]	D751
Tensile strength[a]	D751 (supported materials) D412 (unsupported materials)
Thickness	D751
UV light resistance	G26
Weight	D751
Zipper strength[a]	2061

[a] Key physical property
[b] Test method is currently being developed
Source: Ref. 15.

ous chemical. A further discussion of how a permeation test cell works can be found in the *Chemical Protective Clothing* reference text published by AIHA [15].

E. Types of Protective Clothing

Chemical protective clothing is divided into three categories: protective gloves, splash suits, or totally encapsulating chemical protective (TECP) suits. Each of these categories contains various materials that provide some degree of protection to chemical, biological, physical, and radiological hazards in the work environment. Figure 9 provides a complete description of the types of chemical pro-

Table 4 Test Methods for Chemical Protective Clothing

Characteristics	Test
A. Chemical resistance	
1. Permeation resistance	ASTM F739-85: Resistance of Protective Clothing Materials to Permeation by Hazardous Liquids and Gases
2. Swelling and solubility	ASTM D471-79: Rubber Property—Effects of Liquids
3. Strength degradation	ASTM D543: Resistance of Plastics to Chemical Reagents
4. Crazing	ASTM F484-7: Stress Crazing of Acrylic Plastics in Contact with Liquid or Semi-Liquid Compounds
5. Transparency	ASTM 1746-70: Transparency of Protective Clothing Materials to Penetration by Liquids
6. Penetration resistance	ASTM F903-87: Resistance of Protective Clothing Materials to Penetration by Liquids
B. Strength	
1. Tear resistance and strength	ASTM D751-73: Testing of Coated Fabrics
	ASTM D412-75: Rubber Properties in Tension
Fed. 191A-5102	ASTM D1682: Strength and Elongation, Breaking of Woven Cloth: Cut Strip Method
Fed. 191A-5134	ASTM D2261: Tearing Strength of Woven Fabrics by the Tongue Method
2. Puncture resistance	See Ref. 4
3. Abrasion resistance	ASTM D1175: Abrasion Resistance of Textile Fabric
C. Dexterity/flexibility	
1. Dexterity (gloves only)	See Refs. 4, 26, 27
2. Flexibility	ASTM D1388: Stiffness of Fabrics, Cantilever Test Method
D. Aging resistnace	
1. Ozone resistance	ASTM D3041-72: Coated Fabrics—Ozone Cracking in Chamber; ASTM D1149-64: Rubber Deterioration—Dynamic Ozone Cracking in a Chamber
2. UV resistance	ASTM G27: Operating Xenon-Arc Type Apparatus for LIght Exposure of Nonmetallic Materials—Method A—Continuous Exposure to LIght
E. Chemical selection guide	ASTM F1001-86
F. Whole ensemble	Standard Practice for Pressure Testing of Gas Tight Totally Encapsulating Chemical Protective Suits
1. Pressure (inflation) testing	ASTM F1052-87
2. Qualitative leak testing[a]	ASTM F23.50-02
3. Quantitative leak testing[a]	ASTM F23.50-03
4. Qualitative evaluation of fit, function, and integrity	ASTM F23.50-04

[a] Test Method is currently being developed

Source: AIHA, ASTM Test Method for Chemical Protective Clothing

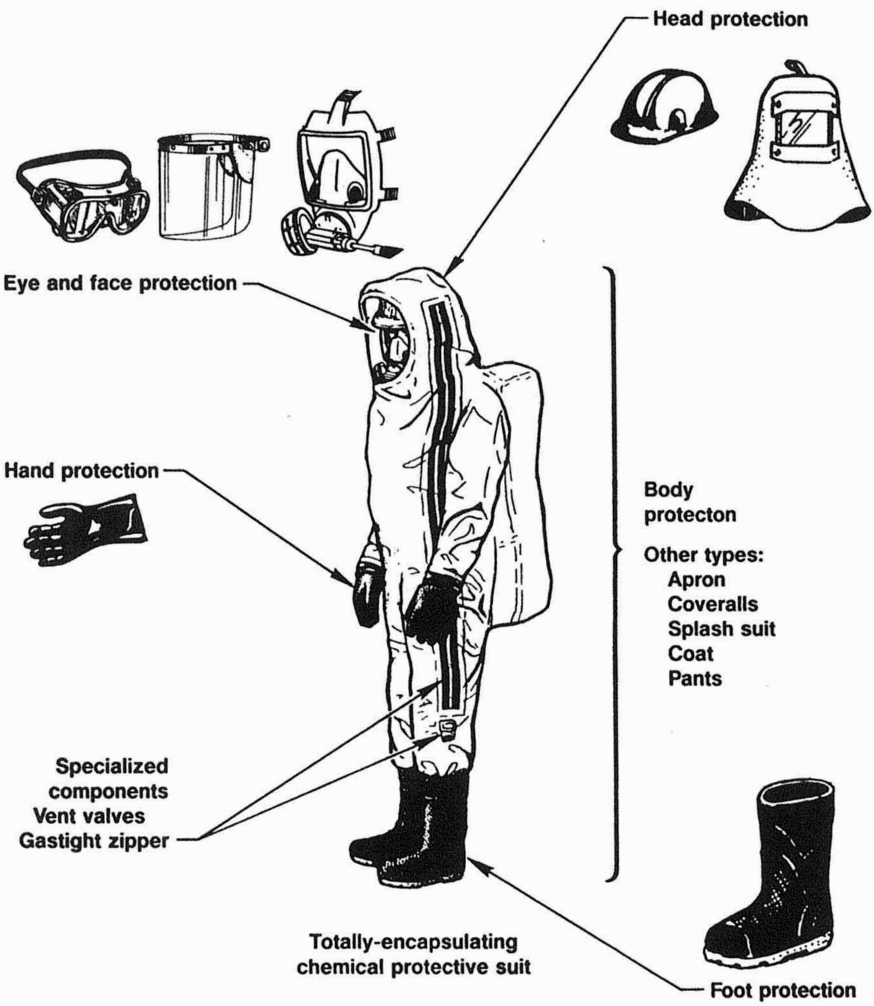

Figure 9 The different types of available protective clothing.

tective clothing (CPC) available, and Table 5 provides a description of the specific body parts requiring protection and the type of CPC equipment used.

Protective gloves are the most widely used CPC and are available in a wide variety of materials that vary among manufacturers. Before selecting protective gloves, one should consult with the manufacturer. The structure of the material has an influence on permeation across the glove material. Depending on the glove manufacturer, performance data (chemical resistance and physical performance)

Table 5 Description of the Specific Body Parts Requiring Protection and the Type of CPC Equipment Used

Body part	CPC type
Eye and face	Chemical goggle
	Face shield
	TECP suit lens
	Full-face respirator
Head	Splash hood
	Hard hat
	TECP suit material and seams
Hand	Glove
Body	Apron
	Coveralls
	Splash suit (pants and coat)
	TECP suit material and seams
	TECP suit vent valves
	TECP suit gas-tight zipper
Foot	Boots/booties
	TECP suit material and seams

Source: Ref. 15.

will vary greatly from material to material, depending on several factors, including material thickness, glove construction, temperature, and the type of material.

Chemical protective gloves are divided into three categories: unsupported, supported or coated, and impregnated gloves. Unsupported gloves offer several advantages, including a high degree of dexterity and greater selection of polymers, lengths, and thickness versus supported gloves. Supported gloves, or coated gloves, have fabric liners with cured polymer coatings. For supported gloves, the advantages are increased thermal capacity, abrasion, and tear resistance, with the disadvantage of less dexterity.

Table 6 provides a list of common construction materials for chemical protective gloves. Manufacturer test data should be compared when selecting specific gloves, including the structure of the glove materials, the formulation and processing, and the differences between each manufacturer. Specific permeation test data on protective materials vary from one manufacturer to another and are not always interchangeable. Generally, chemical resistance selection charts provide recommendations for a variety of glove coatings relative to their chemical resistance to exposure to various materials. Chemical-resistance selection charts should be obtained from the glove manufacturer, or through a vendor or distributer.

Splash suits include chemical-resistant coats and pants or overalls equipped with a hood. Various materials are available for splash suits, including butyl, rubber

Table 6 List of Common Construction Materials for Chemical Protective Gloves

---

Butyl, Isobutylene–isoprene rubber (IIR)
Natural rubber (NR)
Neoprene, chloroprene (CR)
Nitrile, acrylonitrile–butadiene rubber (NBR)
Polyethylene (PE)
Polyvinyl alcohol (PVA)
Polyvinvyl chloride (PVC)
Polyurethane (PU)
Viton[a]
Silver Shield[b]

---

[a] Du Pont trademark
[b] North trademark
Source: Ref. 15.

blends of nitrile, rubber and polyvinyl chloride, chloroprene, and polyurethane. The advantage of splash suits is their ability to prevent direct skin contact with liquids. However, these suits do not protect against vapor penetration. One must use professional judgment when selecting splash suits to ensure that adequate protection from workplace hazards is achieved.

Totally encapsulating chemical protective (TECP) suits combine all aspects of CPC types into one full-body covering. Depending on the individual composition of the TECP and the construction materials available (Table 7), the degree of chemical exposure to the wearer can be minimized. A TECP suit may provide a gas-tight environment that can be used to protect against gases and vapors that are skin-absorbed (e.g., hydrogen cyanide). How effectively TECP suits function in an adverse environment is dependent on the type of construction material, the seam structure, and the closures of the protective clothing. Table 8 lists the components of a TECP suit that provide protection against chemical exposure to the wearer. Since many of the TECP suits are used during emergency response and hazardous waste operations, it is imperative that reliable test data be obtained from the manufacturer before selection. A general chemical-resistance selection chart (Table 9) provides permeation data for a wide range of hazardous materials, and can be obtained from the protective clothing manufacturer.

The TECP suits are designed to completely surround the worker with an impermeable barrier. These suits incorporate all other major types of CPC plus specific items, including vent valves, airline connections, body-cooling devices, common equipment, and respirators. Currently, two styles of TECP garments are available, which differ in the location of the positive-pressure SCBA. Suits that

Table 7 Primary Construction Materials of Commercially Available TECP Suits

Primary construction material[a,b]	Ensemble vendor
Butyl/nylon/butyl	Kappler Safety Group Fyrepel Products Trelleborg
Butyl/polyester/chloroprene	Mine Safety Appliances (MSA)
Chlorinate polyethylene	ILC Dover Standard Safety Equipment
Chlorobutyl/Nomex/chlorobutyl	Arrowhead Products ILC Dober
Chloroprene/nylon	National Draeger
Polyvinyl chloride/nylone	Kappler Safety Group
Polyvinyl chloride/polyester	Standard Safety Equipment
Polyvinvyl chloride/nylon/polyvinyl chloride	Fyrepel Products National Draeger Trelleborg Wheeler Protective Apparel
Teflon/fiberglass/Teflon	Chemical Fabrics Corporation
Viton/nylon/chloroprene	Mine Safety Appliances National Draeger
Viton/butyl/nylon/butyl	Trelleborg
Viton/polyester/Viton	Fyrepel Products

[a] The primary construction materials are described with the external surface first and the surface facing the wearer last.
[b] Available in thickness ranges from 8 to 28 mils (1 mil is equivalent to 0.001 in. or 0.025 mm).
Source: Ref. 15.

Table 8 The Components of a TECP Suit that Prevent Chemical Exposure

Primary construction material
Seams
Closures
Gloves
Visors
Boots
Vent valves

Source: Ref. 15.

Table 9 Chemical Resistance Selection Chart

Chemical Resistance Data for Blue Mex Protective Material			
Chemical Name	B.T.[a] (min)	S.D.L.[b] (ppm)	P.R.[c] (mg/cm2/min)
1. Acetaldehyde	>480	0.05	ND
2. Acetic acid	>240	0.32	ND
3. Acetone	>480	0.13	ND
4. Acetonitrile (95%)	>480	0.11	ND
5. Acetyle chloride	>240	0.01	ND
6. Acrolein	>180	0.03	ND
7. Acrylic acid	>480	0.1	ND
8. Acrylonitrile	>180	0.11	ND
9. AFFF	<240	0.10	ND
10. Allyl alcohol	>480	0.30	ND
11. Allyl chloride	>180	0.04	ND
12. Ammonia (gas)	>480	0.088	ND
13. Ammonia (liquid)	>480	0.145	ND
14. Amyl acetate	>480	0.084	ND
15. Aniline	>480	1.00	ND
16. Antiknock compounds[d]	>480	0.01	ND
17. Arsine gas	>180	0.78	ND
18. Benzene	>480	0.01	ND
19. Benzonitrile	>480	0.15	ND
20. Benzyl chloride	>480	0.01	ND
21. Bromine liquid	18	0.01	ND
22. Bromochloromethane	>180	0.01	ND
23. Butadiene (1,3-)	>480	0.066	ND
24. Butanol (*n*-)	>480	0.072	ND
25. Butyl ether	>480	0.025	ND
26. Butylene oxide (1,2-)	>280	0.01	ND
27. Butyraldehyde	>480	0.03	ND
28. Calcium chloride (42% w/w)	>240	1.00	ND
29. Carbon disulfide	>480	1.00	ND
30. Carbon tetrachloride	>480	0.06	ND
31. Chlorine dioxide (5%)	>480	1.00	ND
32. Chlorine (gas)	>480	0.041	ND
33. Chlorine (liquid)	>480	5.000	ND
34. Chloroacetic acid (99+ % liq.)	>60	0.06	63.7
35. Chloroacetophenone	>480	0.5	ND
36. Chlorobenzene	>480	0.5	ND
37. Chloroform	>480	0.097	ND
38. Chloropicrine	>480	0.1	ND
39. Chlorosulfonic acid	>480	1.00	ND
40. Chromic acid[e]	>180	1.00	ND

(*continued*)

Table 9 Continued

Chemical Resistance Data for Blue Mex Protective Material

Chemical Name	B.T.[a] (min)	S.D.L.[b] (ppm)	P.R.[c] (mg/cm2/min)
41. Cynanide salt 45%	>480	0.34	ND
42. Diazinon	>180	0.1	ND
43. Cichloro-2-butene (1,4-) (85%)	>480	0.3	ND
44. Dichloroethylene (1,2-)	>180	0.1	ND
45. Dichloromethane	>480	0.16	ND
46. Diethylamine	>480	0.71	ND
47. Dimethyl acetamide	>480	26.00	ND
48. Dimethyl hydrazine	>480	0.04	ND
49. Epichlorohydrin	>180	0.03	ND
50. Ethoxyethanol (2-)	>480	0.31	ND
51. Ethyl acetate	>480	0.1	ND
52. Ethyl acrylate	>480	0.2	ND
53. Ethyl benzene	>480	0.01	ND
54. Ethyl ether	>240	0.01	ND
55. Ethyl methacrylate	>240	0.01	ND
56. Ethyl vinyl ether	>180	0.02	ND
57. Ethylamine (70% w/w)	>240	0.02	ND
58. Ethylene diamone	>480	0.01	ND
59. Ethylene dichloride	>480	0.053	ND
60. Ethylene glycol	>240	0.12	ND
61. Ethylene oxide (gas)	>480	0.21	ND
62. Ethylene oxide (liquid)	>180	0.083	ND
63. Ethyleneimine	357	0.01	.032
64. Ferric chloride	>480	1.00	ND
65. Ferrous chloride	>480	1.00	ND
66. Fluorine (tech)	>480	0.014	ND
67. Fluosilicic acid	>480	1.00	ND
68. Formaldehyde (37% W/W)	>240	0.37	ND
69. Formic acid	>480	0.011	ND
70. Freon 113	>480	0.059	ND
71. Freon TF	>180	0.054	ND
72. Gasoline	>480	0.056	ND
73. Glacial acetic acid	>480	1.000	ND
74. Hexachlorobutadiene	>480	0.5	ND
75. Hexamethylene diisocyanate	>480	1.00	ND
76. Hexane (*n*-)	>480	0.06	ND
77. Hydrazine	>480	0.10	ND
78. Hydrazine hydrate	>240	0.03	ND
79. Hydrobromic acid (48%)	>480	0.19	ND
80. Hydrochloric acid (37%)	>240	0.20	ND

(continued)

Table 9 Continued

Chemical Resistance Data for Blue Mex Protective Material			
Chemical Name	B.T.[a] (min)	S.D.L.[b] (ppm)	P.R.[c] (mg/cm2/min)
81. Hydrofluoric acid (49-51%)	>180	0.025	ND
82. Hydrogen chloride	>480	0.056	ND
83. Hydrogen cyanide	>180	4.00	ND
84. Hydrogen fluoride gas	>480	0.01	ND
85. Hydrogen peroxide (70%)	>480	3.00	ND
86. Hydrogen sulfide	>180	12.00	ND
87. Isophorone diisocyanate	>480	1.00	ND
88. Isoprene	>180	0.01	ND
89. Isopropyl alcohol	>480	0.01	ND
90. JP-4	>240	0.01	ND
91. Maleic acid	>480	1.00	ND
92. Maleic anhydride	>480	1.00	ND
93. Mercury	>480	0.0003	ND
94. Mesityl oxide	>480	0.11	ND
95. Methacrylic acid	>480	0.1	ND
96. Methane	>480	5.000	ND
97. Methanole	>480	0.53	ND
98. Methyl bromide gas	>180	0.06	ND
99. Methyl chloride	>480	0.089	ND
100. Methyl ethyl ketone	>240	0.01	ND
101. Methyl iodide	>480	0.01	ND
102. Methyl isobutyl ketone	>480	0.048	ND
103. Methyl isocyanate	>480	1.00	ND
104. Methyl mercaptan	>480	0.8	ND
105. Methyl sulfoxide	>240	0.01	ND
106. Methylene dianiline (4,4′-)	>480	0.10	ND
107. Methylmethacrylamide (*n*-) (97%)	>480	1.00	ND
108. Mineral spirits	>480	1.00	ND
109. Monomethylamine	>480	0.01	ND
110. Nitric acid (70%)	>180	0.07	ND
111. Nitric acid—red fuming (90+%)	>180	0.089	ND
112. Nitrobenzene	>480	1.00	ND
113. Nitrogen tetroxide	220	0.051	7
114. Nitromethane	>480	0.31	ND
115. Nonylamine	>480	0.05	ND
116. Octane	>480	0.02	ND
117. Oleum	>480	0.06	ND
118. Organo-tin paint	>240	0.03	ND
119. Otto fuel II	>480	0.01	ND
120. Phenol (85%)	>480	0.01	ND

(*continued*)

Table 9 Continued

Chemical Resistance Data for Blue Mex Protective Material

Chemical Name	B.T.[a] (min)	S.D.L.[b] (ppm)	P.R.[c] (mg/cm2/min)
121. Phosgene	>480	0.10	ND
122. Polychlorinated biphenyls	>480	0.01	
123. Propane	>480	0.30	ND
124. Propionaldehyde	>480	2.00	ND
125. Propylene oxide	>180	0.03	ND
126. Pseudo cumene (90%)	>480	0.041	ND
127. Pyridine	>480	0.23	ND
128. Skydrol	>480	1.00	ND
129. Sodium cyanide	>180	10.00	ND
130. Sodium dichromate (5%)	>480	1.0	ND
131. Sodium hydroxide	>480	0.2	ND
132. Sodium hypochlorite	>480	3.0	ND
133. Styrene	>180	0.068	ND
134. Sulfur dichloride (80%)[d]	448	0.084	.33
135. Sulfur dioxide	>480	0.04	ND
136. Sulfuric acid (95%)	>480	0.019	ND
137. Sulfuryl floride gas (Vikane)	>180	0.1	ND
138. *t*-Butyl alcohol	>480	0.30	ND
139. Tetrchloroethylene	>480	0.081	ND
140. Tetrahydrofuran	>480	0.098	ND
141. Tetralone	>480	1.00	ND
142. Titanium tetrachloride	>480	1.000	ND
143. Toluene	>480	.031	ND
144. Toluene diisocyanate	>480	1.00	ND
145. Trichloroethane	>480	.099	ND
146. Trichloroethane (1,1,1-)	>480	0.30	ND
147. Trichloroethylene	>240	0.01	ND
148. Triethylamine	>480	0.13	ND
149. *t*-Butyl methyl ether	>180	0.21	ND
150. Vinyl acetate	>180	0.01	ND
151. Vinyl chloride	>180	0.022	ND
152. Vinylidine chloride	>180	0.03	ND
153. Xylenes (mixed)	>180	0.036	ND

[a] Breakthrough time (observed).
[b] System detection limit.
[c] Permeation rate.
[d] Contains tetraethyl lead
[e] Exposed to a relative humidity of 99.8%
ND = none detected
Source: Courtesy of MSA.

completely enclose the SCBA and the wearer (Fig. 10) versus type II suits that completely enclose the wearer, but have the SCBA located outside the suit, where exposure to hazardous chemicals may occur. The major difference in the two types of TECP suits is related to the decontamination necessary for the SCBA unit. The TECP suits are used by emergency response personnel to protect against exposure to specific chemicals during hazardous chemical emergencies.

Before selecting CPC, the health and safety professional should consult with the manufacturer or vendor to ensure that the type of protective clothing is properly selected for the application required.

F. Protective Clothing Selection Criteria

To ensure that CPC provides adequate protection, it is important to understand how to select and use chemical protective clothing. An evaluation of the work environment is necessary to determine the process operations and job tasks before selecting protective clothing. The use of good industrial hygiene control methods, including engineering and work practice controls, must be in place before using protective clothing. A review of the operations or job tasks requiring chemical protective clothing should be made by trained personnel familiar with such protective equipment.

The following factors should be considered during the initial selection process:

a. Identification of the job classification or task, to accurately evaluate when CPC would be required.
b. A detailed review of the process or job task to determine which operations will require CPC, including tasks that may be limited by use of such equipment. All aspects of the job (e.g., cleaning, maintenance tasks, routine operations) should be evaluated to reflect any variation in the work environment.
c. Evaluation of hazards, including a review of the specific chemicals being used and their effects, both individually as well as when used with other chemicals, during various work tasks.
d. Review of the material safety data sheet (MSDS) to identify the physical properties of the chemicals being used including the physical state of the material (e.g., solid, liquid, gas) as well as the vapor pressure, flammability, and combustibility. Additional physical hazards should be evaluated (e.g., foot hazards, abrasion risks, lacerations, or others) to select specific protective clothing.
e. Observation of the job task or operation to determine how long CPC will be in contact with the chemicals, related to whether the contact is routine, intermittent, or infrequent (emergency response).

In addition to the initial selection or criteria described in the previous section, the chemical toxicity is an important factor that must be determined when selecting

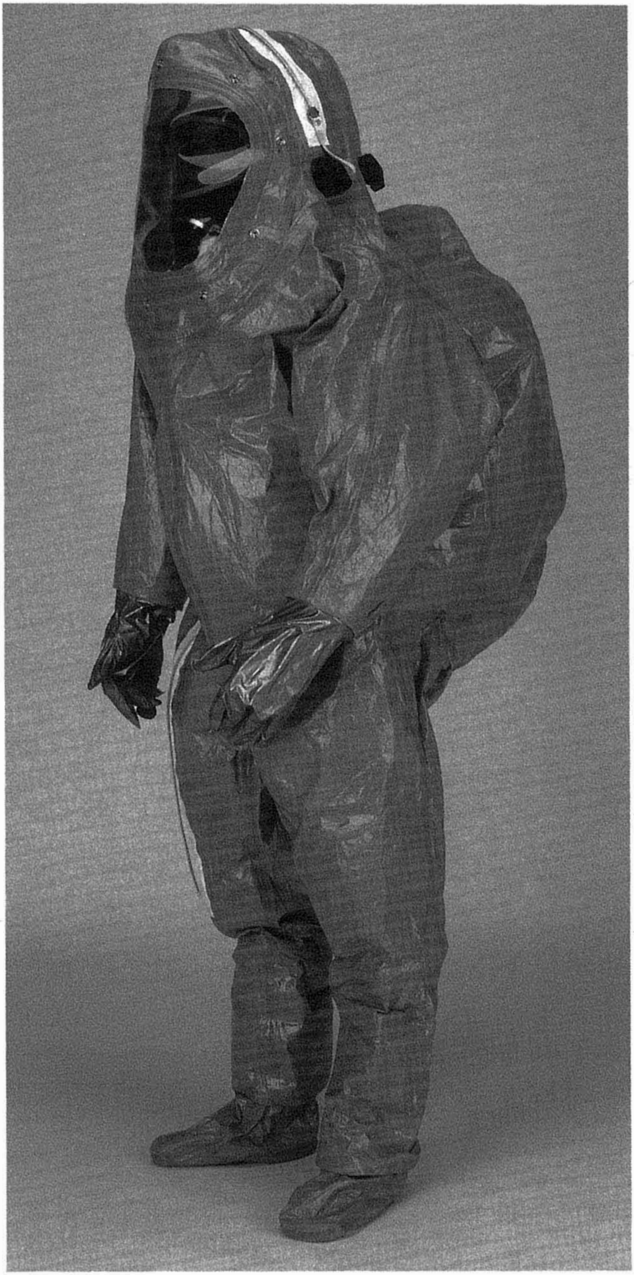

Figure 10 Totally encapsulating chemical protective suit that completely encloses the SCBA. (Courtesy MSA.)

proper chemical protective clothing. Limited information on skin exposure to toxic chemicals exists in the literature, thus making this parameter difficult to evaluate.

Information published by the American Conference of Governmental Industrial Hygienists (ACGIH) identifies chemicals with a "skin" notation in the *Threshold Limit Values* (TLVs) and *Biological Exposure Indices* (BEIs) reference booklet [8]. Accordingly, the *skin* designation includes overall exposure by the cutaneous routes of entry through either airborne exposure or direct contact with the chemical.

As described in Chapter 2, various toxicity classification schemes exist that may be used during the initial screening process to select which CPC will be used. In addition to toxicity-ranking schemes, several other factors should be considered when selecting chemical protective clothing including skin-designated chemicals, corrosive or irritant materials (not skin-designated), and allergic sensitizers. Each of these factors will be briefly discussed to assist in selecting proper CPC.

The degree to which skin-designated chemicals influence the selection process is related to the toxic effects on the body if the material penetrates the skin and to the severity of these systemic effects. Several other factors involving the skin-designation must be addressed, including absorption rate for the chemical, chemical hazard potential (e.g., carcinogen or teratogen), reversible versus permanent damage, and whether or not a potential for IDLH conditions exist from skin contact only. Some chemical substances may not have a skin notation, but rather act as corrosives or irritants. Depending on the degree of corrositivity the selection of CPC may be extremely important to prevent skin burns. Finally, some materials (e.g., amines, epoxy resins) act as allergic sensitizers, thus requiring proper selection of protective clothing to prevent potential problems in sensitized individuals.

In addition to the initial selection criteria previously described, several of other factors related to performance data must be considered in the selection of protective clothing, including chemical resistance, durability, flexibility and dexterity, temperature effects, ease of decontamination, compatibility with other equipment, and shelf life.

1. Chemical Resistance

One of the most important factors in selecting protective clothing is its ability to withstand specific chemicals under a wide range of environmental conditions. Many operations in the chemical industry involve a mixture of many chemicals that have different chemical resistance, depending on the type of chemical and the type of material associated with the protective clothing. Three important features are associated with chemical resistance of protective clothing: permeation, degradation, and penetration.

Permeation involves the ability of a contaminant to penetrate a protective material and is a function of several factors, including the type of material, the chemical concentration, and the thickness of the material (greater thickness equates to greater breakthrough time). On the basis of the concentration of the contaminant and the contact time, permeation will occur at various rates. No material is resistant to permeation by all chemicals; therefore, one must consult with manufacturer permeation test data to determine the optimum protective clothing to be selected. When encountering chemical mixtures, protective clothing should be selected that offers the widest range of protection against the chemicals likely to be encountered. When little permeation test data are available, one must use general recommendations provided by the manufacturer. In addition to providing permeation charts, some manufacturers provide database and software programs (Fig. 11) to assist in the selection of protective clothing.

In combination with permeation, degradation is a factor that should be evaluated when selecting chemical- resistant materials. Because of a chemical reaction between the contaminant and the protective clothing, some deterioration may result, which may lead to damage and permeation or penetration of the contaminant.

Penetration results from design or construction problems with the zippers, tears, or the material itself. A number of manufacturers offer a wide range of protective clothing with various design features, some of which provide excellent protection from various chemicals.

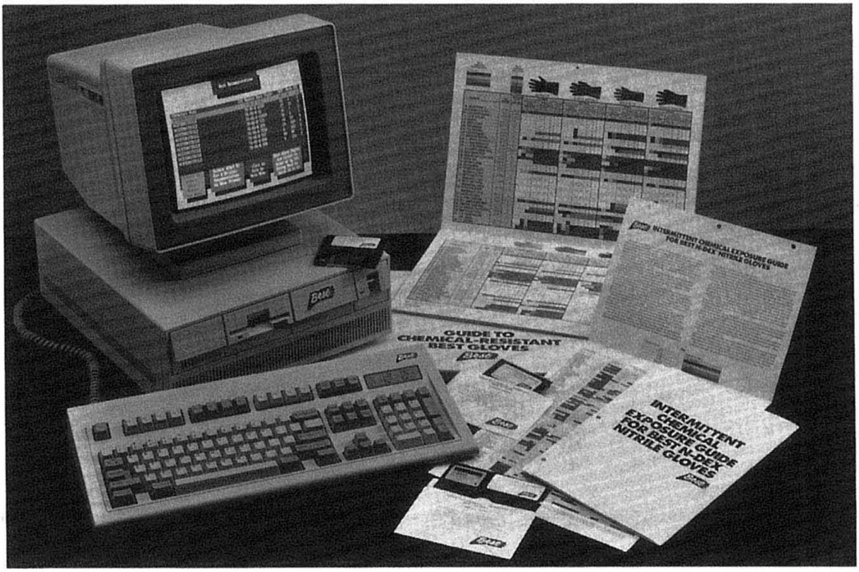

Figure 11 Database and software programs are available to assist in the selection of protective clothing. (Courtesy Best Manufacturing Company.)

2. Durability

The ability of workers to perform various tasks while wearing protective clothing must be evaluated during the selection process. Protective clothing must be able to withstand punctures, tears, or scrapes during certain tasks to provide adequate worker protection. In addition, the ability to withstand the contamination–decontamination process must be closely evaluated to ensure that protective clothing integrity is maintained.

3. Flexibility and Dexterity

Workers may be required to perform various tasks without being hindered by the protective clothing being worn. If specific tasks require the use of tools, the dexterity to the wearer may be a major concern that needs to be addressed during the selection process.

4. Temperature Effects

The ability of protective clothing material to resist permeation is dependent on temperature extremes. High temperature may affect permeability related to material stretching, whereas low temperature may result in a loss of dexterity, thereby reducing movement. Excessive temperature may also result in potential heat stress problems when totally encapsulating suits are worn.

5. Ease of Decontamination

The ability of protective clothing to be cleaned and decontaminated is an important factor in the selection process. When protective clothing becomes contaminated, it must either be decontaminated or properly discarded. Which option is selected depends on several factors, including ease of decontamination, replacement costs, toxicity of protective clothing after decontamination, and whether or not the garment can be reused.

Effective decontamination of protective clothing depends on the physical state of the contaminant, and the solubility properties of the contaminant and the protective clothing. Materials that have been contaminated with viscous liquids or buttery solids are difficult to decontaminate, whereas those contaminated with free-flowing liquids, solid powders, gases, and hard solids are easier to decontaminate.

Solubility properties are an important aspect of decontamination. If the contaminant has solubility properties drastically different from the protective clothing polymers and similar to the decontaminating solvent, it can be easily removed. However, if the solubility properties between the contaminant and the protective clothing polymer are similar, then the garment may be more difficult to decontaminate, since the chemical may permeate the garment.

Several methods are available to decontaminate protective garments. The simplest approach is to place the garment in a stream of warm air for several hours to allow evaporation of the contaminant. Depending on the volatility of the contaminant and its solubility, this may or may not be a viable method.

Several other decontaminating solutions are available, depending on the contaminant. Specific recommendations for decontaminating protective clothing may be obtained from the protective clothing manufacturer, or from a chemist familiar with the contaminant. The most commonly used decontaminating solution is water, which offers many advantages, including no toxic properties, no effect on most protective clothing materials, good solubility properties, and ease of availability. Water does remove most surface contamination, but may not remove contaminants from within the protective material.

Organic solvents are also used to remove contaminants from protective clothing. It is important to know the solubility properties of both the contaminant and the decontaminating solution. Again, toxicity and the physical properties (e.g., flammability) must be considered when selecting a decontaminating solution.

It is difficult to determine if a protective clothing material has been adequately decontaminated. Depending on experience, as well as a careful review of the solubility properties of both the contaminant and the decontaminating solution, one should be able to properly select the desired decontaminating solution. If one can avoid or minimize contact with the contaminant, the issue of decontamination is a lower priority. Finally, the issue of how to properly dispose of contaminated waste, which may be classified as hazardous, must be addressed before the decontamination process begins.

6. Compatibility with Other Equipment

Currently, there are no design standards for chemical protective clothing; therefore, it is important to verify that protective clothing will not hinder other protective equipment from being properly used. Examples of compatibility with other equipment may include the use of SCBAs with totally encapsulating suits.

7. Shelf-Life

Specific attention to manufacturer recommendations must be followed to ensure that the maximum life of protective clothing is maintained. Occasionally, specific shelf-life expiration dates are listed by the manufacturer. Protective clothing that is past the expiration date may not offer the degree of protection necessary.

IV. OTHER PERSONAL PROTECTIVE EQUIPMENT

ANSI Z87.1–1989 provides minimum requirements for eye and face protection and guidance for the selection, use, and maintenance of this equipment [17]. Occupational operations or processes for which eye and face hazards exist include, but are not limited to, machining operations, material welding and cutting, chemical handling, and assembly operations.

Eye and face protection is divided into primary and secondary protectors. Primary protectors may be worn alone or in conjunction with a secondary protector, whereas secondary devices shall be worn only in conjunction with a primary protector.

Safety spectacles may be used to protect the eyes from a variety of hazards, including flying particles and radiation. Some spectacles may also have side shields to offer further protection, although these should not be used to limit splash protection, since liquids may still enter the sides.

Protective goggles are primary protectors that fit the face immediately surrounding the eyes to shield the eyes from a variety of hazards. Goggles can protect the eyes from injurious corrosive liquids and may be used in combination with faceshields to offer further protection to the wearer's face and neck. ANSI classifies faceshields as secondary protectors, meaning they must be worn with primary protectors, such as safety spectacles or goggles.

Welding helmets are another special type of faceshield that offers eye and face protection from flying particles, as well as protection from ultraviolet radiation generated during welding operations. ANSI Z87.1–1989 describes filter lens requirements for welding operations [17].

Head protection, which includes hard hats, is another form of personal protective equipment that is intended to protect workers' heads from falling debris and small objects. In addition, hard hats offer some protection to liquid splashes that may be injurious to the body.

Foot protection is required in work areas where falling objects may strike the foot area. Foot protection can vary from steel-toed shoes to more elaborate boots that provide protection against hazardous materials, which may not be afforded solely by steel-toed shoes.

V. ESTABLISHING A PERSONAL PROTECTIVE EQUIPMENT PROGRAM

The following program elements should be considered when developing a personal protective equipment program.

a. Conduct an exposure assessment to define potential chemical and physical hazards in the workplace. The assessment should be conducted by a trained health and safety professional who has an understanding of basic industrial hygiene principles.
b. Evaluate engineering and work practice controls for adequacy, including identification of certain job tasks that may require specific personal protective equipment.
c. From a thorough evaluation of each job task, select chemical protective clothing (CPC) and equipment necessary to adequately protect the worker. The

handling of carcinogens may require stringent engineering controls, in addition to mandatory use of personal protective equipment.

d. Determine the toxicity of the material and how easily the material may penetrate the skin. Chemicals that may penetrate the skin require special protective clothing that will minimize skin contact and subsequent skin absorption. Also, some materials may not be directly skin-absorbed, but may cause severe irritation and, also, may be extremely corrosive. In these situations, protective clothing must be worn that will not allow injurious chemicals to contact the skin.
e. Consult with manufacturer's test data on specific chemical protective clothing and, in some cases, conduct laboratory testing to verify manufacturer's specifications.
f. Develop and implement a training program covering chemical protective clothing, including the proper selection, use, and limitations of such equipment. The program may be incorporated into the hazard communication program and should also include the proper inspection, maintenance, and repair of CPC.
g. On an ongoing basis, the PPE program should be reviewed and audited to ensure that the actual PPE being provided is effective at protecting the wearer from likely hazards to be encountered in the workplace.

VI. SUMMARY

As part of a health and safety program, personal protective equipment must be properly selected, worn, and maintained, under the direction of qualified health and safety professionals, to ensure effective protection from workplace hazards. Many of the existing OSHA and ANSI standards on personal protective equipment are performance-oriented, which requires a knowledge of many workplace hazards.

This chapter has provided a brief overview of different types of personal protective equipment (PPE) that are available as a final alternative, after other industrial hygiene control methods, such as engineering controls, have been used. The material in this chapter is not intended to be all-inclusive in content or scope. Further information can be obtained by consulting the references at the end of this chapter.

REFERENCES

1. Code of Federal Regulations, Title 29, Labor, Parts 1900–1926, U.S. Government Printing Office, Washington, DC.
2. American National Standards Institute (ANSI), Z88.2–1969, *Practices for Respiratory Protection*, ANSI, 1430 Broadway, New York, NY 10018, 1969.

3. American National Standards Institute (ANSI), Z88.2–1980, *Practices for Respiratory Protection*, ANSI, 1430 Broadway, New York, NY 10018, 1980.
4. American National Standards Institute (ANSI), Z88.2–1992, *Practices for Respiratory Protection*, ANSI, 1430 Broadway, New York, NY 10018, 1992.
5. National Institute for Occupational Safety and Health (NIOSH), *A Guide to Industrial Respiratory Protection*, 87–116, NIOSH, Cincinnati, OH, 1987.
6. Code of Federal Regulations, Title 30, Mineral Resources Parts 11–14A, U. S. Government Printing Office, Washington, DC.
7. National Institute for Occupational Safety and Health (NIOSH), *NIOSH-Certified Equipment List*, NIOSH, Cincinnati, OH; NIOSH, (updated periodically).
8. The American Conference of Governmental Industrial Hygienists (ACGIH), *Threshold Limit Values*, ACGIH, Cincinnati, OH, (published annually).
9. American Industrial Hygiene Association (AIHA), *Respiratory Protection: A Manual and Guideline*, AIHA, Akron, OH, 1991.
10. Compressed Gas Association, 1235 Jefferson Davis Hwy., Arlington, VA 22202. Pamphlets: *Commodity Specifications for Air*, Pamphlet G-7.1, 1966 (also 1989).
11. National Institute for Occupational Safety and Health, *NIOSH Pocket Guide to Chemical Hazards*, NIOSH, Cincinnati, OH, June 1990.
12. U. S. Department of Labor, *Respiratory Protection in Industrial Hygiene Technical Manual*, U. S. Government Printing Office, Washington, DC, March 30, 1984.
13. American National Standards Institute (ANSI), Z117.1–1989, *Safety Requirements for Confined Spaces*, ANSI, 1430 Broadway, New York, NY, 1989.
14. American National Standards Institute (ANSI), Z88.6–1984, *Respirator Use—Physical Qualifications for Personnel*, ANSI, 1430 Broadway, New York, NY 10018, 1984.
15. American Industrial Hygiene Association (AIHA), *Chemical Protective Clothing*, AIHA, Akron, OH, 1990.
16. NFPA 1993 Support Function Protective Garments for Hazardous Chemical Operations, 1990.
17. American National Standards Institute (ANSI) Z87.1–1989, *Practice for Occupational and Educational Eye and Face Protection*, ANSI, 1430 Broadway, New York, NY 10018, 1989.
18. National Safety Council, *Fundamentals of Industrial Hygiene*, Chicago, IL, 1988.
19. U. S. Department of Labor, *OSHA Technical Manual*, U. S. Governmental Printing Office, Washington, D. C., March 26, 1990.

BIBLIOGRAPHY

The American Conference of Governmental Industrial Hygienists (ACGIH), *Threshold Limit Values*, ACGIH, Cincinnati, OH, (published annually).

American Industrial Hygiene Association (AIHA), *Chemical Protective Clothing*, AIHA, Akron, OH, 1990.

American Industrial Hygiene Association (AIHA), *Respiratory Protection: A Manual and Guideline*, AIHA, Akron, OH, 1991.

American National Standards Institute (ANSI), Z88.2–1969, *Practices for Respiratory Protection*, ANSI, New York, 1969.

American National Standards Institute (ANSI) Z88.2-1980, *Practices for Respiratory Protection*, ANSI, New York, 1992.

American National Standards Institute (ANSI) Z88.2-1992, *Practices for Respiratory Protection*, ANSI, New York, 1992.

American National Standards Institute (ANSI) Z88.6-1984, *Respirator Use—Physical Qualifications for Personnel*, ANSI, New York, 1984.

American National Standards Institute (ANSI), Z87.1-1989, *Practice for Occupational and Educational Eye and Face Protection*, ANSI, New York, 1989.

American National Standards Institute (ANSI), Z117.1-1989, *Safety Requirements for Confined Spaces*, ANSI, New York, 1989.

Code of Federal Regulations, Title 29, Labor, Parts 1900-1926, U. S. Government Printing Office, Washington, DC.

Code of Federal Regulations, Title 30, Mineral Resources, Parts 11-14A. U. S. Government Printing Office, Washington, DC.

Compressed Gas Association, 1235 Jefferson Davis Hwy., Arlington, VA 22202. Pamphlets: *Commodity Specifications for Air*, Pamphlet G-7.1- 1966 (also 1989).

G. D. Clayton and F. E. Clayton, eds, *Patty's Industrial Hygiene and Toxicology*, Vol. 1, 4th ed., John Wiley & Sons, New York, 1991.

3M Occupational Health and Environmental Safety Division, *Respirator Selection Guide*, 3M, St. Paul, MN (published periodically).

NFPA 1993 Support Function Protective Garments for Hazardous Chemical Operations, 1990.

National Institute for Occupational Safety and Health (NIOSH), *A Guide to Industrial Respiratory Protection*, 87-116, NIOSH, Cincinnati, OH, 1987.

National Institute for Occupational Safety and Health (NIOSH). *NIOSH-Certified Equipment List*. NIOSH, Cincinnati, OH, (updated periodically).

National Institute for Occupational Safety and Health, (NIOSH), *NIOSH Pocket Guide to Chemical Hazards*, Cincinnati, OH, June 1990.

National Institute for Occupational Safety and Health (NIOSH), *Occupational Diseases: A Guide to Their Recognition*, NIOSH, Cincinnati, OH, 1977.

NIOSH/OSHA, *Occupational Health Guidelines for Chemical Hazards*, DHHS(NIOSH), Publication 81-123, U. S. Government Printing Office, Washington, DC, 1981.

National Safety Council, *Fundamentals of Industrial Hygiene*, NSC, Chicago, 1988.

U. S. Department of Labor, *Respiratory Protection in Industrial Hygiene Technical Manual*, U. S. Government Printing Office, Washington, DC, March 30, 1984.

U. S. Department of Labor, *OSHA Technical Manual*, U. S. Governmental Printing Office, Washington, DC, March 26, 1990.

U. S. Department of Transportation (DOT), *Emergency Response Guidebook*, Washington, DC (latest edition).

5

Design and Operating Considerations for Process Equipment

Joseph F. Louvar
BASF Corporation, Wyandotte, Michigan
Stanley S. Grossel
Process Safety & Design, Inc., Clifton, New Jersey

I. INTRODUCTION

A. Background

Design deficiencies are often the major reasons for plant accidents. Attention to design detail is particularly important when handling toxic chemicals, because relatively minor deficiencies may produce significant toxic exposures. Detailed design reviews often show that minor improvements in the design will eliminate these potential problems. This chapter and the next highlight the design features that are particularly important when handling toxic chemicals.

The various phases of a process design project are illustrated in Fig. 1, and Tables 1–3. As illustrated in Fig. 1 and Table 1, the application of safety principles is especially important during the earlier stages of a project; that is, while developing the process description, design basis, process flow diagram (PFD), and the piping and instrumentation diagram (PI&D).

When handling toxic chemicals, process hazards analyses are among the most important steps of a design project. Most companies use methods such as (1) what-if, (2) checklist, (3) what-if/checklist, (4) hazards and operability study (HAZOPS), or (5) an equivalent method. The more complex analyses methods (e.g., HAZOPS) are usually used for the particularly hazardous operations within the plant. The elements of a good review always include (1) open discussions, (2) plant and operating experience, (3) creativity, (4) synergies achieved by employing persons with different backgrounds, (5) technical knowledge relevant to

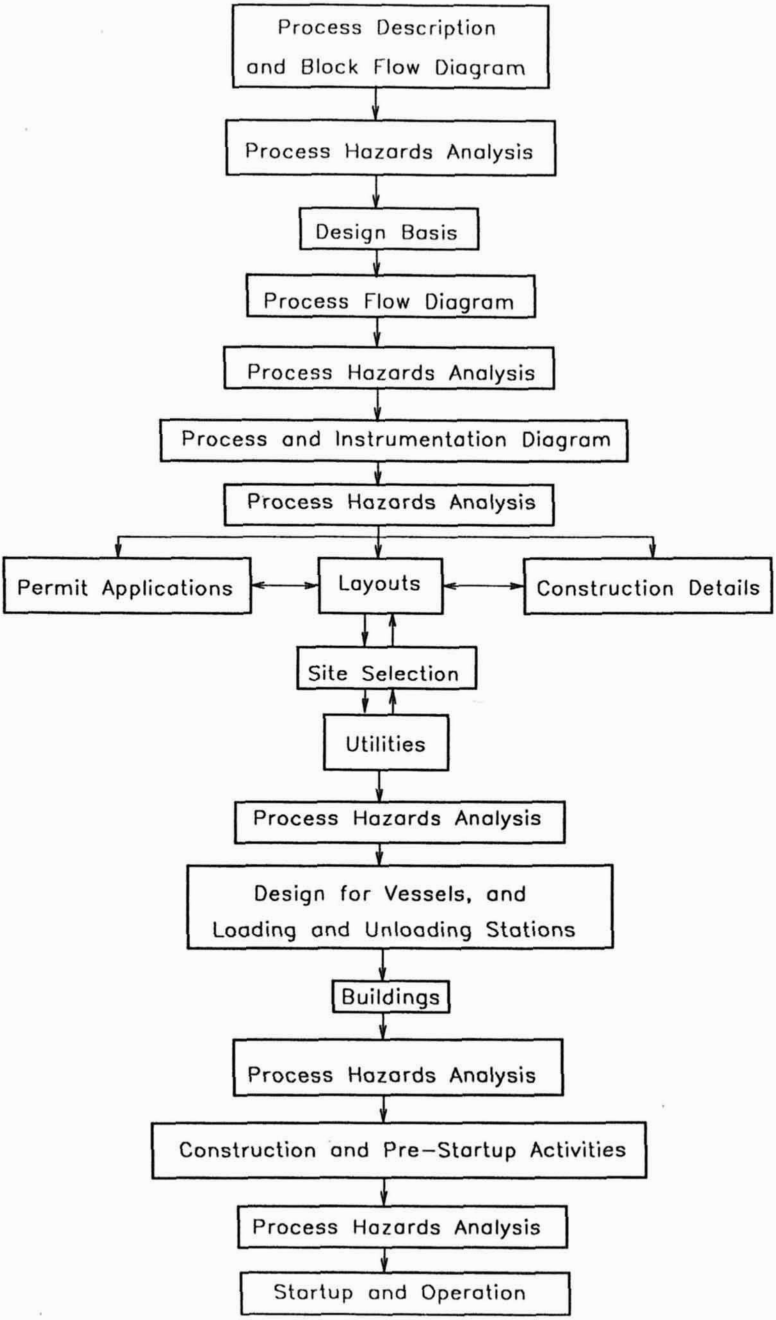

Figure 1 Process design flowsheet for handling toxic chemicals.

Table 1 Checklist for Safe Designs: Environment, Personnel, and Equipment

Risk assessment
Inherent safety
Fail-safe design
Site specifications for safety
Isolation
Operating procedures
Safety procedures
Emergency plans
Control room location and design
Design safeguards
Emergency shutdown procedures
Toxicity considerations and designs
Safety considerations and designs
    Containment
    Safe piping practices: highlights
    Small versus big concepts
    Simple versus complex concepts
    Sample systems and analyzers
    Valve types
    Equipment specifications
    Fire protection

Table 2 Checklist for Prestart-up Activities

Safety activities for OSHA requirements
  - Process hazard analysis
  - Operating procedures
  - Training and training programs
  - Contractor training
  - Inspections for mechanical integrity
  - Permits, for example, hot-work
  - Management of change systems
  - Incident investigation process

Checklists for safety
Leak tests
Hydrostatic tests
Water tests

Table 3 Design Objectives for PFD, P&ID, and Construction Phases of Projects

PFD
- Mass and energy balances
- Major controls
- Operating philosophy

P&ID
- Specify instruments and controls
- Specify materials of construction (sometimes given on PFD)
- Size equipment
- Size pipe, valves, and miscellaneous equipment

Construction details
- Piping
- Vessels
- Environmental control systems
- HVAC
- Instrumentation
- Electrical
- Civil and architectural

the particular chemistry and process equipment, and (6) a commitment to develop a high-quality review.

It is very important to use hazards analyses at the early stages of the project. As the project progresses, changes are more difficult to make. As illustrated in Fig.1, additional hazards analyses are also made at the later stages of projects.

B. Codes and Standards

The special design features of a plant are governed by the application of good-engineering practices and science. Some of the practices are in the form of codes, standards, and regulations [1]. A *code* is a document that specifies mandatory requirements using the word "shall." Examples include the American Society of Mechanical Engineer's (ASME) Boiler and Pressure Vessel Code, and the National Electrical Code (NEC). *Standards* are documents that contain mandatory and advisory provisions using the word "should." An example of a standard is the Industrial Risk Insurers document *General Recommendations for Spacing*. A *regulation* is a law that is administered by a national, regional, or local governmental organization. An example of regulations include those developed by the U.S. Environmental Protection Agency (EPA).

A general working knowledge of codes, standards, and regulations is important in all phases of a process design; for example, environmental regulations may be the major design basis for the treatment of wastestreams. The codes, standards, and regulations that are relevant to plant designs are listed in Tables 4–12.

Table 4 Process Codes, Standards, and Regulations

- U.S. National Institute for Occupational Safety and Health (NIOSH)
- U.S. Occupational Safety and Health Administration (OSHA)
- U.S. Environmental Protection Agency (EPA)
- National, state, and local regulations
- Insurance carriers' requirements
- Chemical Manufacturers Association (CMA)

Table 5 Vessel Codes, Standards, and Regulations

- American Society of Mechanical Engineers (ASME) Boiler and Pressure Code
  - Section I, Power Boilers
  - Section VIII, Pressure Vessels
- American Petroleum Institute (API):
  - Standard 620 for large, welded, low-pressure storage tanks
  - Standard 650 for welded steel tanks for oil storage
- Underwriters Laboratory Standards

Table 6 Mechanical Equipment Codes, Standards, and Regulations

- National Fire Code
- National Fire Protection Association (NFPA)
- Crane Manufacturers Association of America
- Monorail Manufacturers Association
- Conveyor Equipment Manufacturers Association
- Heat Exchange Institute
- National Electrical Code (NEC)
- Tubular Exchanger Manufacturers Association (TEMA)
- Hydraulic Institute
- American Petroleum Institute (API)

Table 7 Electrical Codes, Standards, and Regulations

- American National Standards Institute (ANSI)
- National Electric Safety Code (NESC)
- NEC Article 110: electrical installation
- Institute of Electrical and Electronic Engineers
- Factory mutual (cable and conduit tray spacing)

Table 8 Instrument Codes, Standards, and Regulations

Instrument Society of America
ASME, OSHA, NESC, ANSI
NFPA Manual 497M: classifying of gases, vapors, dusts for equipment if in hazardous locations
NFPA Code 30: flammable, combustible liquids
NFPA compilation 325M: flammable liquids, gases, and volatile solids
NIOSH Occupation Health Guidelines for Chemical Hazards
Other NFPA and NIOSH materials
American Society for Testing and Materials (ASTM)
Underwriters Laboratories, Inc.
American Gas Association

Table 9 Environmental and HVAC Codes, Standards, and Regulations

EPA: environmental and water-use regulations
OSHA: especially noise and dust
American Society of Heating, Refrigerating, and Air-Conditioning Engineers (ASHRARE)
Sheet Metal and Air-Conditioning Contractors' National Association
NEC

Table 10 Piping Codes, Standards, and Regulations

ASME Codes B31.1 and 31.3: power piping, and chemical plant and petroleum refinery piping
NFPA Pamphlets 13 and 24: sprinkler systems and private fire service mains
ANSI-Mfr. Standardization Society Standards SP 58 and 69: pipe hangers and supports

Table 11 Civil and Architectural Codes, Standards, and Regulations

Southern Building Code Congress: Standard Building Code 1991
State, local regulations on air quality, storm water discharge, recyclable wastes, underground storage, landfill, railroads
Building Officials and Code Administrators International (BOCA) National Building Code, 1990
U.S. Resource Conservation and Recovery Act:
  Subtitle C on hazardous waste
  Subtitle I on petroleum products, underground storage
U.S. Clean Water Act of 1977 on waste discharge
U.S. Safe Drinking Water Act on water supply contamination
U.S. Clean Air Act on air quality standards
American Railway Engineering Association
U.S. Toxic Substances Control Act
Uniform Building Code (latest issue)
Applicable state and county codes

Table 12 Layout Codes, Standards, and Regulations

- OSHA codes
    - 1910.23 on handrails to guard openings and holes
    - 1910.24 on industrial stairs
    - 1910.27 on ladders
    - 1910.37 and .39 on means of egress
    - 1920.109 on explosives and blasting agents
    - 1910.110 on liquefied petroleum gases
    - 1910.119 on process safety management of highly hazardous chemicals
    - 1910.141 on rest rooms and locker rooms
    - 1910.179 on cranes and their clearance
- NFPA codes, standards and recommendations
    - 30 on flammable and combustible liquids
    - 31 on oil-burning equipment
    - 35 on making organic coatings
    - 36 on solvent extraction plants
    - 43A on oxidizer storage
    - 58 on handling liquefied petroleum gases
    - 61A, B, C, and D on hazards in agricultural commodity plants
    - 68 on venting deflagrations
    - 70 on National Electric Code
    - 80, 80A, and 101 on fires
    - 91 on blower and exhaust systems for dusts and vapors
    - 92A on smoke control
    - 101M on life safety
    - 204M on venting smoke and heat
    - 211 on fireplaces, venting, and solid fuel burning
    - 214 on cooling towers
    - 220 on types of building construction
    - 231 on storage
    - 231C on rack storage
    - 321 on classifying flammable and combustible liquids
    - 497A and B on hazardous locations for electrical installation
    - 650 on pneumatic conveying of combustible materials
    - 654 on fire and dust explosions

II. MATERIALS OF CONSTRUCTION

A. Background

The specification of materials is a very important element of a process design. It represents the difference between trouble-free plants and plants that are plagued with problems. When handling toxic chemicals, these problems will be manifested in sudden, unexpected, and dangerous emissions: pipe leaks, vessel leaks, and structural failures.

Corrosion cannot always be eliminated. The secret of success lies in controlling it, rather then preventing it. To control corrosion, the engineer must specify the best materials of construction for the application, use construction techniques that minimize corrosion, and specify operating conditions to minimize corrosion.

When handling toxic agents, potential corrosion problems must be acknowledged throughout the entire life of the plant. Corrosion control concepts, therefore, need to be emphasized in the original plant design, the maintenance program, and the plant management of change program. This section will cover the specific details relevant to the control of corrosion during these three phases of a project.

The designer is cautioned that this section on materials is useful only for preliminary materials selection and preliminary system design. The technology of materials and design exceeds the scope of a single chapter. Material specialists should be consulted to incorporate the more comprehensive, complex, and important technological details that are necessary for a safe design.

B. Fundamentals of Corrosion

1. Testing

Laboratory corrosion tests are needed to identify the suitable materials for specific applications. Unfortunately, laboratory tests are not totally conclusive; corrosion tests in a pilot plant and plant environment are also recommended [2]. These larger-scale tests are needed because there are important plant environmental factors that cannot be simulated in laboratory tests; that is, dissolved gases, velocity, turbulence, abrasion, crevice conditions, stress levels, trace impurities, and others.

Corrosion rates are given in mils per year (mpy), for which 1 mpy is equivalent to 0.001-in. penetration per year. A corrosion rate of 0.1 mpy is essentially no corrosion; less than 2 mpy is excellent; less than 20 mpy is good; 20–50 mpy is satisfactory; and more than 50 mpy is unsatisfactory.

There are several different forms of corrosion, as shown in Figs. 2 and 3. These forms of corrosion are the basis for specifying the materials of construction and are the basis for using the special design features [3] discussed in Sec. II.E.

2. Uniform Corrosion

As this classification implies, this type of corrosion attacks large areas. The rate of uniform corrosion is determined in the laboratory. Uniform corrosion is controlled primarily by specifying the appropriate material of construction and also by external protection, such as paint, elastomeric coating, and such.

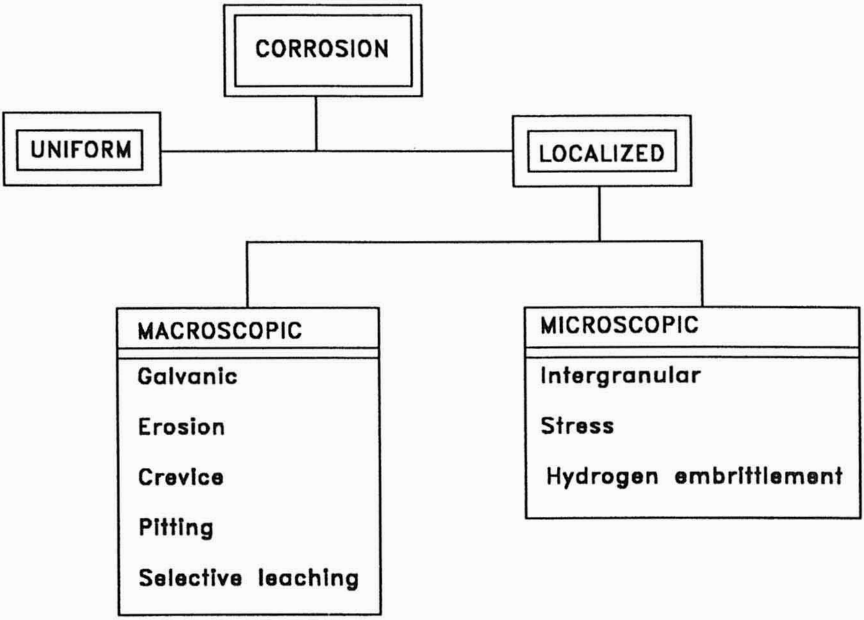

Figure 2 Different forms of corrosion.

3. Galvanic Corrosion

Galvanic corrosion is the flow of current from a more active metal (least noble) to a less active metal (most noble); see the galvanic series in Table 13. Coupling two metals that are close together in this series minimizes corrosion, and coupling two metals that are widely separated will accelerate attack on the more active metal (least noble). If the weld material, for example, is the most active metal, the corrosion process can solubilize the weld material. A plant accident in the 1980s illustrates the potential hazard of galvanic corrosion; a weld around the base of a distillation column corroded, and the entire column collapsed while in operation. The resulting plant damage was substantial. Galvanic corrosion is also avoided by preventing the contact between two different metals by separating them with barriers, such as gaskets or the equivalent.

4. Erosion Corrosion

A jet impinging on a surface may increase the rate of chemical deterioration, and it may also deteriorate the surface by mechanical abrasion. This type of corrosion may deteriorate pump impellers, agitator blades, and pipe elbows. It is minimized by using harder materials and by designing to minimize impingement.

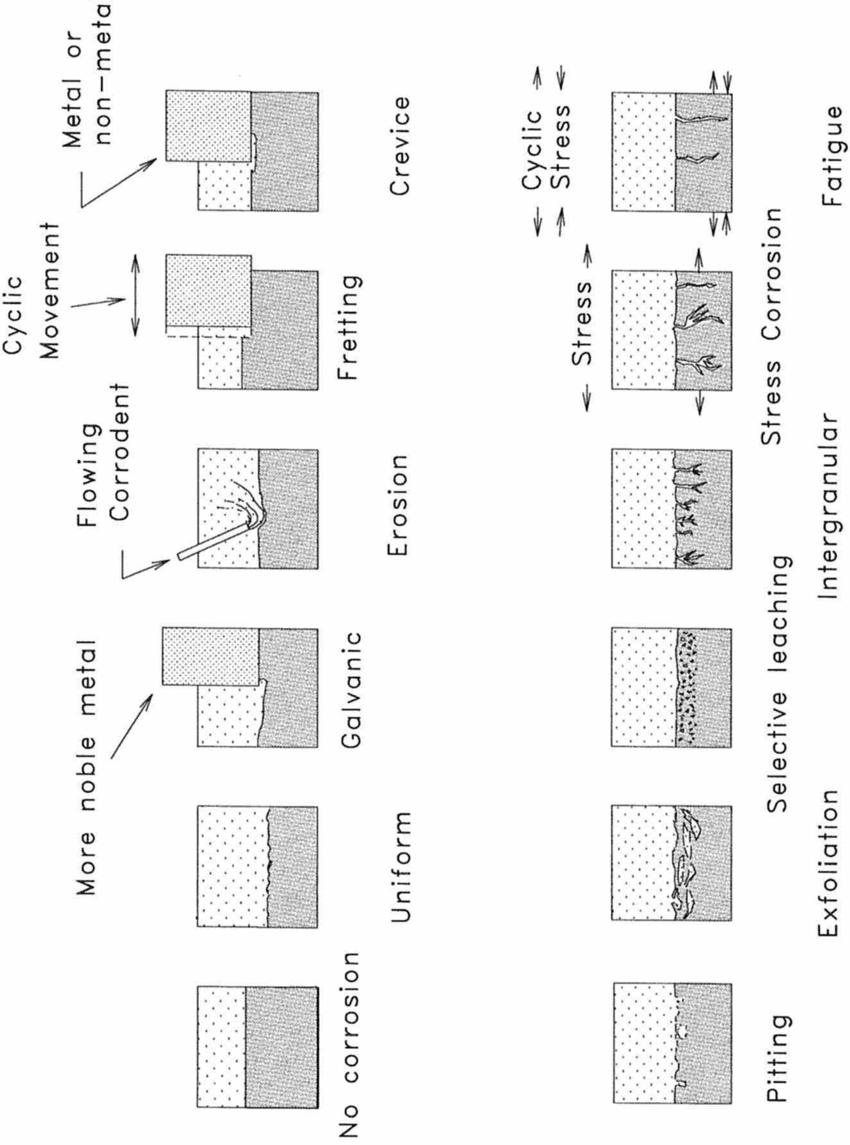

Figure 3 Forms of corrosion for metals and alloys.

Table 13 Galvanic Series in Seawater

Most noble–least active

- Platinum
- Gold
- Graphite
- Silver
- 18-8, 3% Mo stainless steel, type 316 (passive)
- 18-8 stainless steel, type 304 (passive)
- Titanium
- 70% Ni–30% Cu (Monel)
- 76% Ni–16% Cr–7% Fe (Inconel; passive)
- Nickel (passive)
- 88% Cu–3% Zn–6.5% Sn–1.5% Pb (comp. M-bronze)
- 88% Cu–2% Xn–10% Sn (composition G-bronze)
- 70% Cu–30% Ni
- 5% Zn–20% Ni, balance Cu (Ambrac)
- Silicon bronze
- Copper
- Red brass
- Aluminum bronze
- Yellow brass
- 76% Ni–16% Cr–7% Fe (Inconel; active)
- Nickel (active)
- Naval brass
- Manganese bronze
- Muntz metal
- Tin
- Lead
- 18-8, 3% Mo stainless steel, type 316 (active)
- 18-8 stainless steel, type 304 (active)
- 50-50 lead–tin solder
- 13% chromium stainless steel, type 410 (active)
- Ni-resist
- Cast iron
- Wrought iron
- Mild steel
- Aluminum 2024T
- Aluminum 2017T
- Cadmium
- Alclad
- Aluminum 6053T
- Aluminum 1100
- Aluminum 3003
- Aluminum 3004
- Aluminum 5052H
- Zinc
- Magnesium alloys
- Magnesium

Least noble–most active

Source: Ref. 9.

5. Crevice Corrosion

Crevice corrosion is deterioration within, or adjacent to, a crevice formed between two materials. This form of corrosion is due to (1) a deficiency of oxygen, (2) acidity changes, (3) buildup of ions, or (4) the loss of an inhibitor. A crevice geometry includes the space between parts, such as, a flange and the gasket, a rivet and the metal riveted, dirt deposits and the metal surface, and corrosion deposits and the metal surface.

The methods used to minimize crevice corrosion include the following: (1) prevent the elimination of oxygen for those materials that depend on oxygen to achieve corrosion resistance (stainless steels and titanium), (2) design to remove crevices, and (3) keep the surfaces clean; for example, prevent settling of solids by using higher pipe velocities.

6. Pitting Corrosion

As illustrated in Fig. 3, some deterioration may form holes, possibly initiated at minor material deformations. Once the small pits are formed, then the continued deterioration is possible by the crevice corrosion mechanism. The methods used to minimize pitting corrosion include (1) cleanliness, (2) materials selection (resistant to pitting), and (3) smooth surfaces.

7. Selective Leaching Corrosion

Selective leaching deterioration is due to the removal of one element of an alloy. This is another form of damage that may further deteriorate by crevice corrosion. The solution to this problem is the correct selection of materials.

8. Intergranular Corrosion

When molten metals are cast, they form grains and grain boundaries. The grains contain the metallic composition that is designed to control corrosion. The grain boundaries, however, are zones that have slightly different compositions that are less resistant to corrosion. This problem is minimized by specifying materials to withstand this particular environment. Sometimes, an appropriate heat-treating and annealing process improves resistance to this type of corrosion.

9. Stress Corrosion

Internal or external stresses may accelerate corrosion. Almost all alloys are susceptible to stress corrosion. The time of failure may vary from minutes to years. Examples of this type of failure include (1) failure of cold-formed brass when used in an ammonia environment, (2) the cracking of stainless steels when they are subjected to chloride environments, and (3) caustic embrittlement cracking of steel in a caustic environment. The methods used to prevent stress-cracking include specifying a more resistant material, removing the stress, and removing the chemical species that enhances stress corrosion.

10. Hydrogen Embrittlement

Hydrogen penetrates carbon steel at elevated temperatures and high concentrations of hydrogen. Within the steel, this hydrogen reacts with the carbon to form methane. This encapsulated methane develops high pressures that cause a loss of ductility (hydrogen embrittlement) and, subsequently, cause cracking and blistering of the steel. This problem is prevented by the correct specification of materials.

C. Common Materials of Construction

This section will describe some common materials of construction used for the fabrication of process equipment.

1. Low Carbon Steels (Mild Steel)

Mild steel ($< 0.25\%$ carbon) is the most commonly used, readily welded, construction material.

Equipment made from mild steel usually is suitable for handling organic solvents, with the exception of chlorinated solvents, cold alkaline solutions (even when concentrated), slurries or solutions with sulfuric acid at concentrations greater than 88%, and slurries or solutions with nitric acid at concentrations greater than 65% at ambient temperatures.

Mild steels are rapidly corroded by mineral acids, even when they are very dilute (pH less than 5). However, it is often more economical to use mild steel and include a considerable corrosion allowance on the thickness of the apparatus. Mild steel is not acceptable when metallic contamination of the product is not permissible.

2. High-Alloy Steels (Stainless Steels)

Stainless steel is a generic term that includes about 40 standard grades of wrought stainless steel and about 30 standard grades of cast stainless steel. These steels are broadly defined as iron alloys containing from 12–30% chromium and from zero to 22% nickel. Minor modifying agents, such as carbon, columbium, copper, molybdenum, selenium, sulfur, tantalum, titanium, and other trace elements are added either to improve chemical and oxidation resistance, or to control the mechanical properties. These alloys are widely used in the chemical and process industries because of their wide range of properties, some of which are remarkable and highly specialized.

This family of metals may be used under many corrosive and noncorrosive conditions, from subzero temperatures as low as –300°F, to elevated temperatures as high as 1800°F. The variety of available grades is justified only because each one was developed for a specific purpose. In a sense, each can be considered as being tailored for a definite requirement. However, it must be remembered that stainless steels are not a panacea for all corrosive chemicals used in the process industries.

These alloys, depending on metallurgical structure, are grouped into three classifications:

Class I: martensitic stainless steels
Class II: ferritic stainless steels
Class III: austenitic stainless steels

These steels are produced in the form of cast and wrought products that are used extensively in industry because of their strength, toughness, good fabricating qualities, resistance to oxidation, and resistance to chemical attack. These alloys are available from many suppliers. The analyses of the various types have been standardized—the wrought alloys by the American Iron and Steel Institute (AISI) and the cast alloys by the Alloy Casting Institute (ACI).

The austenitic stainless steels are the most common class of stainless alloys known and used. They constitute a group of iron alloys containing 16–26% chromium and 6–22% nickel. The carbon content is generally controlled to a low value to prevent carbide precipitation. Slight modifications in alloy content produce substantial changes in the properties and corrosion resistance. The various types all have some characteristics in common, and they all have basic differences.

The excellent corrosion resistance of the 300 series over a wide range of operating conditions and the readily available methods of fabrication by welding and other means of shaping metals make these steels the most widely used throughout the chemical and allied industries.

The formation of a layer of metal oxide on the surface of this steel provides better corrosion resistance in oxidizing environments than under reducing conditions. Common steels 304, 304L, 347, 316, and 316L are used for equipment exposed to aqueous solutions of acids and other low-temperature corrosive conditions. For high-temperature regimens involving oxidation, carbonization, and such, the 309 and 310 compositions may be recommended because of their higher chromium content and, thus, better resistance to oxidation.

The process of adding a layer of metal oxide on the surface of a steel is called *passivation*. The process for passivating a vessel includes degreasing (Table 14), pickling (Table 15), and passivation (Table 16). This procedure is also used to inhibit the catalytic reaction of hydrogen peroxide to form water and oxygen. The degreasing, pickling, and passivation processes may be applied by spraying or by complete immersion. The spraying method, which needs to be continuous, is the most effective route when treating large vessels.

The passivated vessel is tested for the effectiveness of the treatment by adding a 3–5 wt% solution of hydrogen peroxide to the vessel. The solution is observed for 30 min; the appearance of bubbles of oxygen demonstrates that additional treatment is needed.

Table 14 Degreasing Procedure[a]

---

1. Heat degreasing solution to 120–125°F and maintain the temperature during treatment.
   Degreasing solution: 0.2 lb/gal of trisodium phosphate and
   0.2 lb/gal of sodium metasilicate
2. Agitate for 2 h.
3. Rinse with water until pH is neutral.
4. Inspect the vessel. If grease or oil remains, then repeat steps 1–3.

---

[a] *Note*: All of the water used should be chloride-free (that is, less than 20 mg/L), have a pH of 7–8, and be free of iron.
Source: Ref. 10.

Table 15 Pickling Procedure[a]

---

1. Apply a pickling solution at ambient temperature for 1 h.
   a. If treating aluminum: 1 wt% of caustic soda in water.
   b. If stainless: 5 wt% of caustic soda in water.
2. Rinse with water until pH is neutral.
3. Inspect the vessel. If sediment or other foreign matter remains, then repeat steps 1 and 2.

---

[a] *Note*: All of the water used should be chloride-free (that is, less than 20 mg/L), have a pH of 7–8, and be free of iron.
Source: Ref. 10.

Table 16 Passivation Procedure[a]

---

1. Apply a passivation solution at ambient temperature for 2 h.
   Passivation solution: 30–35 wt% nitric acid.
2. Rinse with water until pH is neutral.

---

[a] *Note*: All of the water used should be chloride-free (that is less than 20 mg/L), have a pH of 7–8, and be free of iron.
Source: Ref. 10.

Listed in the following are descriptions and uses for several commonly used 300 series stainless steels:

(*a*) *Type 304*. Type 304,a 19:10 (chromium/nickel) steel, provides a stable austenitic structure under all conditions of fabrication. Carbon (0.08% max.) is sufficient to have reasonable corrosion resistance. This type is used for food, dairy and brewery equipment, and for chemical plants of moderate corrosive duties.

(*b*) *Type 304L*. Type 304L is used for applications involving the welding of plates thicker than about 6.5 mm.

(*c*) *Type 321*. Type 321 is an 18:10 steel that is stabilized with titanium to prevent weld decay or intergranular corrosion. It has corrosion resistance similar to types 304 and 304L, but has a slightly higher strength than 304L. Also, it is better at elevated temperatures than 304L.

(*d*) *Type 347.* Type 347 is an 18:11 steel that is stabilized with niobium for welding. In nitric acid, it is better than type 321; otherwise, it has similar corrosion resistance.

(*e*) *Type 316.* Type 316 has a composition of 17:12:2.5 chromium/nickel/molybdenum. The addition of molybdenum greatly improves the resistance to reducing conditions, such as dilute sulfuric acid solutions and solutions containing halides (such as brine and sea water).

(*f*) *Type 316L.* Type 316L is the low-carbon (0.03% max.) version of type 316 that should be used when the heat input during fabrication exceeds the incubation period of the 316 (0.08% carbon) grade. For example, it is used for welding plates thicker than 1 cm.

(*g*) *Alloy 20.* Alloy 20, also previously called Carpenter 20, is a specialty stainless steel that is superior to type 316 for severely reducing solutions, such as hot, dilute sulfuric acid. It has a composition of 20% chromium, 25% nickel, 4% molybdenum, and 2% copper.

3. Nickel Alloys

Several nickel alloys are frequently used to fabricate process equipment subjected to extreme corrosive conditions. Among these are Monel, Hastelloy B, Hastelloy C, Inconels, and Incoloys. A brief description of them will be presented.

(*a*) *Monel.* Also known as alloy 400, Monel is a widely used nickel alloy, containing about 30% copper and up to 2.5% iron. Monel has good mechanical properties and is easy to fabricate in all wrought forms and castings. K-500, a modified version of this alloy, can be thermally treated and is suitable for items requiring strength, as well as corrosion resistance. Monel has an immunity to stress corrosion cracking and pitting in chlorides and caustic alkali solutions.

Monel is also adequate for equipment handling dry halogen gases and chlorinated hydrocarbons, and it can be used in reducing environments.

(*b*) *Hastelloy B.* Hastelloy B, which has a nominal composition of 65% nickel, 28% molybdenum, and 6% iron, is generally used in reducing conditions. It is intended for use in very severely corrosive situations after postweld heat treatment to prevent intergranular corrosion. This alloy has outstanding resistance to all concentrations of hydrochloric acid, up to boiling-point temperatures, and in boiling sulfuric acid solutions, up to 60% concentration.

(*c*) *Hastelloy C.* Hastelloy C has a composition of 54% nickel, 15% molybdenum, 15% chromium, 5% tungsten, 5% iron, and is less susceptible to intergranular corrosion at welds. The presence of chromium in this alloy gives it better resistance to oxidizing conditions than the nickel–molybdenum alloy, particularly for durability in wet chlorine and concentrated hypochlorite solutions; it has many applications in chlorination processes. In processes in which hydrochloric and sulfuric acid solutions contain oxidizing agents, such as ferric and cupric ions, it is better to use the nickel–molybdenum–chromium alloy than the nickel–molybdenum alloy.

(*d*) *Inconel.* Also known as alloy 600, Inconel contains about 77% nickel and 15% chromium, and the balance is iron. The presence of chromium gives it a passive film and corrosion characteristics similar to those of stainless steels. It is good in caustic service for temperatures up to 300°C (570°F), and has excellent resistance to halogens and halogen acid anhydrides at elevated temperatures.

(*e*) *Incoloy 800.* Incoloy 800 is basically a super-stainless steel, with the composition 21% chromium, 32% nickel, and the balance iron. It is also known as alloy 800. It is a high-temperature material, with resistance to oxidation, and has strength at elevated temperatures, with good workability.

The nickel and chromium contents of this alloy are responsible for its chemical resistance. It performs best in oxidizing environments, such as nitric acid and solutions of chromates and peroxides. Reducing media, such as sulfuric acid, phosphoric acid, hydrochloric acid, and halogen salt solutions, are corrosive to this nickel–chromium–iron alloy, whereas, alkaline and neutral salts are generally harmless. Incoloy has good resistance to many organic chemicals.

In general, Incoloy is very similar to Inconel. For example, the two alloys are comparable in oxidation resistance and in their reaction to fused neutral salts. However, there are differences. Incoloy is superior to Inconel in resistance to sulfonation and cyanide salts, whereas it is inferior in resistance to nitrating, halogen gases, and molten caustic.

For more extensive discussions of the foregoing and other materials of construction, the books by Cheremisinoff [17], Dillon [18], and Gackenbach [19] are recommended.

D. Material Selection for Specific Chemicals

1. General

It is usually not possible to specify the materials [4] of construction for multicomponent systems based on the published charts for single components alone. There is no substitute for good laboratory, pilot plant, and plant corrosion data. Some data are presented in this section, however, to be used as the initial screening step. These data will help the designer reduce the amount of corrosion testing required in the evaluation of materials for specific applications.

2. Ammonia

Anhydrous ammonia (liquid or gas) is handled commercially with carbon steel: use stress-relieved carbon steel to prevent cracking. Liquid and gaseous ammonia are also handled with austenitic chromium–nickel steels at all concentrations up to the boiling point. Liquid and gaseous ammonia can be handled in all plastics up to their temperature limitations (approximately 150°F). For temperatures up to 200°F use penton, high-density polyethylene, and polypropylene. For temperatures up to 400°F use fluorocarbon plastics.

3. Chlorine

Dry chlorine (gas or liquid) is noncorrosive to almost all metals and alloys. An exception, however, is titanium, which reacts violently with dry chlorine. For temperatures up to 300°F, use carbon steel.

Wet chlorine is highly corrosive to all metals and alloys except titanium (0.1 mpy) and Hastelloy C (0.8 mpy). Materials that are commonly used for hot and wet chlorine are glass, fiber glass-reinforced polyesters, and Haveg 41. Polyvinyl chloride is acceptable at ambient temperatures. The best metals for hot and dry chlorine are nickel, Inconel alloy 600, and Hastelloy B. At temperatures of about 1000°F the corrosion rates are high (30–60 mpy).

4. Hydrochloric Acid (HCl Gas)

Recommended materials of construction are shown in Fig. 4. As illustrated, hydrochloric acid is very corrosive to most metals; therefore, nonmetallic materials are preferred. Glass and glass-lined steel, for example, are good for all concentrations at temperatures even above its boiling point. If oxidizing agents are not present, then Hastelloy B is the preferred metal for temperatures above 160°F (5 mpy at 5% and 25 mpy at 30%). If oxidizing agents are present, then titanium is preferred.

5. Hydrofluoric Acid

The recommended materials of construction are shown in Fig. 5. This acid is similar to hydrochloric; that is, it is very corrosive to most metals, and its corrosivity increases with higher oxygen concentrations or in the presence of oxidizing agents. Monel (alloy 400) is the preferred material when conditions change. Its corrosion rate varies from 1 mpy (air-free) to 10 mpy (with air) at all concentrations and low temperatures (less then 75°F), to 20 mpy (air-free) to >20 mpy (with air) at concentrations in the region of 50%. Monel is severely attacked by hydrofluoric vapors.

6. Corrosion Tables

Organic chemicals, except acids, are essentially noncorrosive to metals. They could all be handled in carbon steel. In actual practice, however, the material specification is based on the impurities, such as water, inorganic salts, acids, and bases. Organic chlorides, for example, are noncorrosive; however, in the presence of small amounts of water, they hydrolyze to release hydrogen chloride. The material selection, therefore, is based on the levels of hydrogen chloride and the temperature of operation.

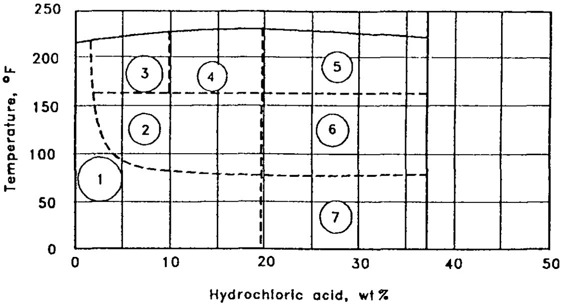

Region	Accepted Materials	
1	Chlorimet 2 Hastelloys B, C, F Durichlor Silver Monel (air free) Nickel (air free) Copper alloys, Low Zn, (air free) Ni-Resist (to 120 °F) Lead 20 alloys to 10 % (175 °F max)	Polyethylene (to 140 °F) Impervious graphite PVC (to 120 °F) Haveg 41 Rubber Saran (to 125 °F) Cl-polyether Epoxies Polyesters
2	Hastelloy B Hastelloy C > 5 % (to 120 °F max) Durichlor Silver Monel to 5 % (air free) Si bronze (air free)	Lead Impervious graphite Haveg 41 PVC (to 120 °F) Rubber Polyesters
3	Chlorimet 2 Hastelloy B Durichlor Lead (Sb) Silver to 5 %	Impervious graphite Haveg 41 (to 210 °F) Cl-polyether (Penton) Polyester Glass
4	Hastelloy B Durichlor Lead (Sb)(to 212 °F) Lead (Ch.)(to 175 °F)	Impervious graphite Haveg 41 (to 210 °F) Glass Cl-polyether
5	Hastelloy B Durichlor Lead (Ch.)(to 175 °F) Impervious graphite	Haveg 41 (to 210 °F) Glass Cl-polyether Special purpose polyester (to 210 °F)
6	Hastelloy B Chlorimet 2 Durichlor Lead (Ch.) Impervious graphite PVC (to 120 °F)	Haveg 41 Rubber Glass Saran (to 125 °F) Cl-polyether Polyesters
7	Hastelloy B, C, F Durichlor Silver Si bronze (air free) Lead (Ch.) Impervious graphite PVC	Haveg 41 Rubber Polyethylene (to 140 °F) Saran Cl-polyether Epoxies Polyesters

Figure 4 Materials selection chart for hydrochloric acid.

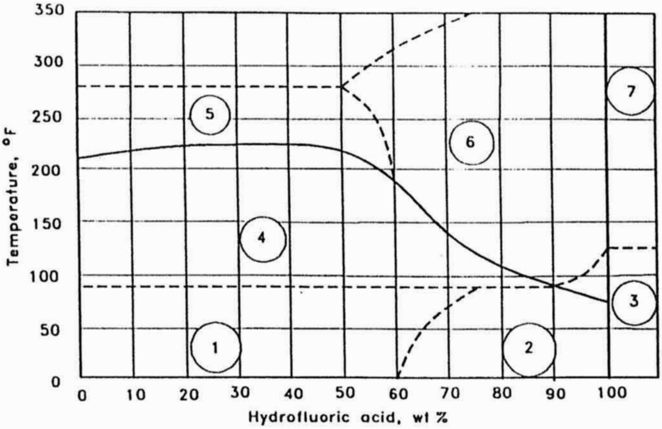

Region	Accepted Materials	
①	Silver Monel (air free) Copper (air free) Nickel (to 50 % and air free) Magnesium > 5 % Lead (to 60 %) Hastelloy B, C 20 alloys (to 50 %)	Inconel (to 40 %) Ni–Resist (to 20 %) Impervious graphite PVC Rubber (to 60 %) Saran Cl–polyether Polyethylene
②	Silver Monel (air free) (II) Copper (air free) (II) Nickel > 90 %	Magnesium Hastelloy B Mild steel Impervious graphite
③	Silver (III) Monel (air free) Copper (air free) (II,III) Magnesium	Mild steel 18–8 stainless (I) Hastelloy C Impervious graphite
④	Silver (III) Monel (air free) Copper (air free) Nickel (to 50 % and air free) Lead (to 60 %)(I)	Impervious graphite PVC to 130 F, 50 % max Rubber, selected comps. to 150 F and 60 % Cl–polyether
⑤	Silver (III) Monel (air free)	Copper (air free) Nickel (to 50 % and air free)
⑥	Monel (air free) (II)	
⑦	Molybdenum Monel (air free) (II)	Hastelloy C

Figure 5 Materials selection chart for hydrofluoric acid. (I) Use with caution above room temperature; (II) velocity-sensitive at concentrations over 80%; (III) not good for plant acid; Copper, refers to copper alloys except those containing Si or > 17%; Zr, Pt, Au: good for all conditions.

Corrosion resistance guides for organic compounds and inorganic compounds are shown in Table 17.

Plastics may be attacked by organic materials as a result of their action as a solvent to the plastic itself or as a solvent to the plasticizer. In either event, there are combinations of plastics and organic chemicals that are unsatisfactory (Table 18).

Two other good sources of corrosion data are the books by NACE [13,14] and Schweitzer [15].

E. Mechanical Features to Minimize Corrosion

Corrosion can result in unexpected, sudden, and significant failures. When handling toxic materials, this can result in dangerous releases and exposures. The specification of the correct materials of construction is a major step in the elimination of failures from corrosion. This correct specification of materials, however, is a necessary, but not a sufficient, condition to prevent failures. The necessary and sufficient conditions for preventing failures caused by corrosion are (1) to select the best materials, and (2) to use the correct mechanical design features for preventing corrosion. This particular section covers these important design features (Table 19).

As illustrated in Fig. 6, nozzle connections to vessels, for example, nozzles in heat exchangers, should be designed to avoid impingement and impingement corrosion.

Special welding practices are shown in Figs. 7 and 8. Figures 9–10 illustrate other solutions for special design problems. These special design features must be reviewed: (1) during the original design of a plant, (2) while developing the plant maintenance program, and (3) while developing the plant management of change program.

A good reference on this subject is the book by Landrum [16].

III. REACTORS AND PROCESS VESSELS

A. General Considerations

This section focuses on some special design considerations [5] for reactors and process vessels. The published standards and codes, discussed in Sec. I, should be considered the minimum requirements when toxic chemicals are involved. The equipment designer should account for the range of process conditions and the range of equipment stresses and, subsequently, use safety factors that are consistent with the hazards involved.

Potential upset conditions should be investigated so that design features can be added to the system to minimize the effects of these events. Examples of potential upset conditions include (1) runaway reactions, (2) internal deflagrations, (3) fabrication failures, (4) mechanical failures, and (5) failures in adjacent process

(*Text continues on page 171.*)

Table 17 Corrosion Resistance of Metals[a]

	SS 302	SS 304	SS 316	Al	Hast C	Brass	Cast iron	Carbon steel
Acetic acid		B	A	B	A	C	D	C
Acetone	A	A	A	A	A	A	A	A
Acetylene	A	A	A	A			A	A
Acrylonitrile	A	A	C	B	B		C	
Ammonia, anhydrous	A	B	A	B	A		D	B
Amyl alcohol		A	A	B	A			A
Aniline	B	A	A	C	B			C
Barium chloride	C	A	A	D	A		D	C
Benzene	B	A	A	B	B	A	B	C
Benzol		A	A	B	A	A		
Boric acid	B	A	A	B	A	C	D	
Bromine (wet)	D	D	D	D	A		D	D
Butyl acetate			C	A	A			A
Butyl alcohol	A	A	A	B	A	C	C	C
Carbon disulfide		B	A	C		C	B	C
Carbon tetrachloride	B	C	B	C	A	A	C	D
Carbonic acid	B	A	B	A	A		D	
Chlorine (dry)	B	A	A	D	A	B	A	
Chloroform	A	A	A	D	A		D	C
Chromic acid (30%)		B			A	D		
Cresols		A	A	B		C		
Cyclohexane		A		A				A
Diesel fuel	A	A	A	A			A	A
Epsom salts	B	A	A	A	B			
Ether	A	A	A	A	B	A		B
Ethyl acetate		A	A	B	B			C
Ethyl alcohol		A	A	B	A	C	A	A
Ethylene chloride		A	A	C	B		C	C
Ethylene glycol		A	A	A	A	B	B	C
Ferric chloride		D	D	D	B	D	D	
Ferric nitrate		A	A	D	A			
Ferric sulfate		A	C	D	A	D	D	
Fluorine	D	D	D	D	A		D	D
Formaldehyde	A	A	A	A	B	B	D	A
Formic acid	C	A	B	D	A	C	D	D
Fuel oils	A	A	A	A	A		C	B
Gasoline	A	A	A	A	A		A	A
Gelatin	A	A	A	A	A	C	D	D
Glycerin	A	A	A	A	A	B	B	B
Heptane	A		A	A	A			B
Hexane	A	A	A	A	A			B
Hydraulic oils (petroleum)	A	A	A	A			A	A
Hydrobromic acid	D	D	D	D	A		D	D

(*continued*)

Table 17 Continued

	SS 302	SS 304	SS 316	Al	Hast C	Brass	Cast iron	Carbon steel
Hydrochloric acid (dry gas)	D	C	A	D	A			D
Hydrocyanic acid	A	A	A	A	A	D		C
Hydrofluoric acid (20%)		D	D	D	B		D	
Hydrogen	A	A	A	A			B	B
Hydrogen peroxide		A	B	A	A	D	D	D
Hydrogen sulfide (aq)		A	A	C	A	C	D	
Iodine		D	D	D	B		D	
Isopropyl alcohol		A	A	B	A	C	C	A
Isopropyl ether	A		A	A				A
Kerosene	A	A	A	A	A	A	A	B
Ketones	A	A	A	B	A		A	A
Lacquers	A	A	A	A		C	C	C
Lactic acid	A	A	B	C	A		D	D
Lead acetate	B	A	A	D	A			D
Magnesium chloride	B	B	B	D	A	C	D	C
Magnesium hydroxide	A	A	A	D	A	B	B	B
Magnesium sulfate	B	B	A	B	B	B	C	B
Maleic	C	A	A	B	A			B
Malic acid	B	A	A	C	A			D
Mercuric chloride	D	D	D	D	B	D	D	D
Mercury	A	A	A	C	A	D	A	A
Methyl alcohol		A	A	B	A	C	A	A
Methylene chloride	A	A	A	A	A	C		B
Methyl ethyl ketone		A	A	A	A			
Naptha	A	A	A	A	A		B	B
Naphthalene	B	A	B	B	A		B	A
Nickel chloride		A	B	D	A		D	
Nickel sulfate	B	A	B	D	B	C	D	D
Nitric acid (10%)	A	A	A	D	A		D	D
Nitric acid (conc.)		D	B	B	B	D	D	
Nitrobenzene	B	A	B	C	B		B	B
Oleic acid	B	A	A	B	B	C	C	C
Oxalic acid (cold)	C	A	B	C	B	C	D	D
Paraffin	A	A	A	A			B	B
Pentane	A	C	C	A	B		B	B
Perchloroethylene	B	A	A	A			B	B
Phenol	B	A	A	B	A	D	D	D
Phosphoric acid (to 40%)		B	A	D	A	D	D	
Phosphoric acid (40–100%)		C	B	D	A	D	D	
Phosphoric acid (crude)		D	C	D	A	D	D	D

(continued)

Table 17 Continued

	SS 302	SS 304	SS 316	Al	Hast C	Brass	Cast iron	Carbon steel
Photographic developer		C	A	C	A		D	
Phthalic anhydride	B	A	B	B	A		C	C
Picric acid	B	A	A	C	A	D	D	D
Potassium chlorate	B	A	A	B	B		B	B
Potassium chloride	C	A	A	B	A	C	B	B
Potassium dichromate	B	A	A	A	B		B	C
Potassium hydroxide (50%)	A	B	B	D	A	D	C	A
Potassium permanganate	B	A	B	B	B		B	B
Potassium sulfate	B	A	B	A	A	B	B	B
Propane (liquefied)	A	A		A		A		B
Propyl alcohol		A	A	A	A			A
Propylene glycol	B	B		A			B	B
Pyridine		C		B			B	A
Pyrogallic acid	B	A	A	B	A		B	B
Silver nitrate	B	A	B	D	A		D	D
Sodium acetate	B	A	A	B			C	C
Sodium bicarbonate	B	A	A	A		A	C	C
Sodium carbonate	B	A	B	C	A	B	B	B
Sodium chloride	B	A	C	C	A	C	B	C
Sodium cyanide	B	A		D		D	B	B
Sodium fluoride	B	C		C	A		D	D
Sodium hydroxide (20%)		A	A	D	A	D	A	
Sodium nitrate	B	A	A	A	B	C	A	B
Sodium peroxide	B	A	A	C	B	C	D	C
Sodium silicate	B	A	B	C	B	C		B
Sodium sulfate	B	A	A	B	B	B	A	B
Sodium sulfide	B	A	B	D	B	D	A	B
Stannic chloride	D	D	D	D	B		D	D
Stearic acid	B	A	A	B	A	C	C	C
Stoddard solvent	A	A	A	A	A	A	B	B
Sulfur dioxide		A	A	A	B			
Sulfuric acid (10–75%)		D	D	D	B	D	D	
Tannic acid	B	A	A	C	B		C	C
Tartaric acid	B	A	B	C	B	C	D	D
Toluene	A	A	A	A	A	A	A	A
Trichloroethylene	B	A	A	B	A	A	C	B
Turpentine	B	A	A	C	A	C	B	B
Varnish	A	A	A	A		B		C
Vinegar	A	A	A	D	A	B	C	D
Xylene	A	A	A	A	A	A	A	B
Zinc chloride	D	A	B	D	B	D	D	D
Zinc sulfate	B	A	A	D	B	C	C	D

[a] A, no effect: acceptable; B, minor effect: acceptable; C, moderate effect: questionable; D, severe effect: not recommended.

Source: Ref. 12.

Table 18 Chemical Resistance of Plastics

Chemical^{a}	LDPE^{b,c}	HDPE^{b,c}	PP/PA^{b,c}	PMP^{b,c}	FEP/TFE/ PFA^{b,c}	PC^{b,c}	PVC^{b,c}	PSF^{b,c}
Acetaldehyde	GN	GF	GN	GN	EE	FN	GN	NN
Acetamide, sat.	EE	EE	EE	EE	EE	NN	NN	NN
Acetic acid (5%)	EE	EE	EE	EE	EE	EG	EE	EE
Acetic acid (50%)	EE	EE	EE	EE	EE	EG	EG	GG
Acetone	EE	EE	EE	EE	EE	NN	NN	NN
Acetonitrile	EE	EE	FN	FN	EE	NN	NN	NN
Acrylonitrile	EE	EE	FN	FN	EE	NN	NN	NN
Adipic acid	EG	EE	EE	EE	EE	EE	EG	GG
Alanine	EE	EE	EE	EE	EE	NN	NN	NN
Allyl alcohol	EE	EE	EE	EG	EE	GF	GF	GF
Aluminum hydroxide	EG	EE	EG	EG	EE	FN	EG	GG
Aluminum salts	EE	EE	EE	EE	EE	EG	EE	EE
Amino acids	EE	EE	EE	EE	EE	EE	EE	EE
Ammonia	EE	EE	EE	EE	EE	NN	EG	GF
Ammonium acetate, sat.	EE	EE	EE	EE	EE	EE	EE	EE
Ammonium glycolate	EG	EE	EG	EG	EE	GF	EE	GG
Ammonium hydroxide (5%)	EE	EE	EE	EE	EE	FN	EE	GG
Ammonium hydroxide (30%)	EG	EE	EG	EG	EE	NN	EG	GG
Ammonium oxalate	EG	EE	EG	EG	EE	EE	EE	EE
Ammonium salts	EE	EE	EE	EE	EE	EG	EG	EE
n-Amyl acetate	GF	EF	GF	GF	EE	NN	NN	NN
Amyl chloride	NN	FN	NN	NN	EE	NN	NN	NN
Aniline	EG	EG	GF	GF	EE	FN	NN	NN
Benzaldehyde	EG	EE	EG	EG	EE	FN	NN	FF
Benzene	FN	GG	GF	GF	EE	NN	NN	NN
Benzoic acid, sat.	EE	EE	EG	EG	EE	EG	EG	FF
Benzyl acetate	EG	EE	EG	EG	EE	FN	NN	NN
Benzyl alcohol	NN	FN	NN	NN	EE	GF	GF	NN
Bromine	NN	FN	NN	NN	EE	FN	GN	NN
Bromobenzene	NN	FN	NN	NN	EE	NN	NN	NN
Bromoform	NN	NN	NN	NN	EE	NN	NN	NN
Butadiene	NN	FN	NN	NN	EE	NN	FN	NN
n-Butyl acetate	GF	EG	GF	GF	EE	NN	NN	NN
n-Butyl alcohol	EE	EE	EE	EG	EE	GF	GF	GF
sec-Butyl alcohol	EG	EE	EG	EG	EE	GF	GG	GF
tert-Butyl alcohol	EG	EE	EG	EG	EE	GF	EG	GF
Butyric acid	NN	FN	NN	NN	EE	FN	FN	GG
Calcium hydroxide, conc.	EE	EE	EE	EE	EE	NN	EE	GG
Calcium hypochlorite, sat.	EE	EE	EE	EG	EE	FN	GF	EE
Carbazole	EE	EE	EE	EE	EE	NN	NN	NN
Carbon disulfide	NN	NN	NN	NN	EE	NN	NN	NN
Carbon tetrachloride	FN	GF	GF	NN	EE	NN	GF	NN
Cedarwood oil	NN	FN	NN	NN	EE	GF	FN	FF
Cellosolve acetate	EG	EE	EG	EG	EE	FN	FN	NN

(continued)

Table 18 Continued

Chemical[a]	LDPE[b,c]	HDPE[b,c]	PP/PA[b,c]	PMP[b,c]	FEP/TFE/ PFA[b,c]	PC[b,c]	PVC[b,c]	PSF[b,c]
Chlorine (10% in air)	GN	EF	FN	GN	EE	EG	EE	NN
Chlorine (10%, moist)	GN	GF	GN	GN	EE	GF	EG	NN
Chloroacetic acid	EE	EE	EG	EG	EE	FN	FN	NN
p-Chloroacetophenone	EE	EE	EE	EE	EE	NN	NN	NN
Chloroform	FN	GF	GF	NN	EE	NN	NN	NN
Chromic acid (10%)	EE	EE	EE	EE	EE	GF	EG	NN
Chromic acid (50%)	EE	EE	GF	GF	EE	FN	EF	NN
Cinnamon oil	NN	FN	NN	NN	EE	GF	NN	FF
Citric acid (10%)	EE	EE	EE	EE	EE	EG	GG	EE
Cresol	NN	FN	GF	NN	EE	NN	NN	NN
Cyclohexane	FN	FN	FN	NN	EE	EG	GF	NN
Decalin	GF	EG	GF	FN	EE	NN	EG	NN
o-Dichlorobenzene	FN	FF	FN	FN	EE	NN	NN	NN
p-Dichlorobenzene	FN	GF	GF	GF	EE	NN	NN	NN
Diethyl benzene	NN	FN	NN	NN	EE	FN	NN	NN
Diethyl ether	NN	FN	NN	NN	EE	NN	FN	NN
Diethyl ketone	GF	GG	GG	GF	EE	NN	NN	NN
Diethyl malonate	EE	EE	EE	EG	EE	FN	GN	FF
Diethylene glycol	EE	EE	EE	EE	EE	GF	FN	GG
Diethylene glycol ethyl ether	EE	EE	EE	EE	EE	FN	FN	FF
Dimethyl formamide	EE	EE	EE	EE	EE	NN	FN	NN
Dimethyl sulfoxide	EE	EE	EE	EE	EE	NN	NN	NN
1,4-Dioxane	GF	GG	GF	GF	EE	GF	FN	GF
Dipropylene glycol	EE	EE	EE	EE	EE	GF	GF	GG
Ether	NN	FN	NN	NN	EE	NN	FN	NN
Ethyl acetate	EE	EE	EE	FN	EE	NN	NN	NN
Ethyl alcohol (absolute)	EG	EE	EG	EG	EE	EG	EG	EG
Ethyl alcohol (40%)	EG	EE	EG	EG	EE	EG	EE	EG
Ethyl benzene	FN	GF	FN	FN	EE	NN	NN	NN
Ethyl benzoate	FF	GG	GF	GF	EE	NN	NN	NN
Ethyl butyrate	GN	GF	GN	FN	EE	NN	NN	NN
Ethyl chloride, liquid	FN	FF	FN	FN	EE	NN	NN	NN
Ethyl cyanoacetate	EE	EE	EE	EE	EE	FN	FN	FF
Ethyl lactate	EE	EE	EE	EE	EE	FN	FN	FF
Ethylene chloride	GN	GF	FN	NN	EE	NN	NN	NN
Ethylene glycol	EE	EE	EE	EE	EE	GF	EE	EE
Ethylene glycol methyl ether	EE	EE	EE	EE	EE	FN	FN	FF
Ethylene oxide	FF	GF	FF	FN	EE	FN	FN	EE
Fluorides	EE	EE	EE	EE	EE	EE	EE	EE
Fluorine	FN	GN	FN	FN	EG	GF	EG	NN
Formaldehyde (10%)	EE	EE	EE	EG	EE	EG	GF	GF
Formaldehyde (40%)	EG	EE	EG	EG	EE	EG	GF	GF
Formic acid (3%)	EG	EE	EG	EG	EE	EG	GF	GG
Formic acid (50%)	EG	EE	EG	EG	EE	EG	GF	GG
Formic acid (98–100%)	EG	EE	EG	EF	EE	EF	FN	FF
Fuel oil	FN	GF	EF	GF	EE	EG	EE	EG
Gasoline	FN	GG	GF	GF	EE	FF	GN	FF

(*continued*)

Table 18 Continued

Chemical[a]	LDPE[b,c]	HDPE[b,c]	PP/PA[b,c]	PMP[b,c]	FEP/TFE/ PFA[b,c]	PC[b,c]	PVC[b,c]	PSF[b,c]
Glacial acetic acid	EG	EE	EG	EG	EE	NN	EG	FN
Glycerin	EE	EE	EE	EE	EE	EE	EE	EE
n-Heptane	FN	GF	FF	FF	EE	EG	GF	EG
Hexane	NN	GF	GF	FN	EE	FN	GN	EG
Hydrochloric acid (1–5%)	EE	EE	EE	EG	EE	EE	EE	EE
Hydrochloric acid (20%)	EE	EE	EE	EE	EE	GF	EG	EE
Hydrochloric acid (35%)	EE	EE	EG	EG	EE	NN	GF	EE
Hydrofluoric acid (4%)	EG	EE	EG	EG	EE	GF	GF	GF
Hydrofluoric acid (48%)	EE	EE	EE	EE	EE	NN	GF	FN
Hydrogen peroxide (3%)	EE	EE	EE	EE	EE	EE	EE	EE
Hydrogen peroxide (30%)	EG	EE	EG	EG	EE	EE	EE	EE
Hydrogen peroxide (90%)	EG	EE	EG	EG	EE	EE	EG	EE
Isobutyl alcohol	EE	EE	EE	EG	EE	EG	EG	EG
Isopropyl acetate	GF	EG	GF	GF	EE	NN	NN	NN
Isopropyl alcohol	EE	EE	EE	EE	EE	EE	EG	EE
Isopropyl benzene	FN	GF	FN	NN	EE	NN	NN	NN
Kerosene	FN	GG	GF	GF	EE	EE	EE	GF
Lactic acid (3%)	EG	EE	EG	EG	EE	EG	GF	EE
Lactic acid (85%)	EE	EE	EG	EG	EE	EG	GF	EE
Methoxyethyl oleate	EG	EE	EG	EG	EE	FN	NN	NN
Methyl alcohol	EE	EE	EE	EE	EE	GF	EF	GF
Methyl ethyl ketone	EG	EE	EG	NN	EE	NN	NN	NN
Methyl isobutyl ketone	GF	EG	GF	FF	EE	NN	NN	NN
Methyl propyl ketone	GF	EG	GF	FF	EE	NN	NN	NN
Methylene chloride	FN	GF	FN	FN	EE	NN	NN	NN
Mineral oil	GN	EE	EE	EG	EE	EG	EG	EE
Nitric acid (1–10%)	EE	EE	EE	EE	EE	EG	EG	EF
Nitric acid (50%)	GG	GN	GN	GN	EE	GF	GF	GF
Nitric acid (70%)	FN	GN	NN	GF	EE	NN	FN	NN
Nitrobenzene	NN	FN	NN	NN	EE	NN	NN	NN
n-Octane	EE	EE	EE	EE	EE	GF	FN	GF
Orange oil	FN	GF	GF	FF	EE	FF	FN	FF
Ozone	EG	EE	EG	EE	EE	EG	EG	EE
Perchloric acid	GN	GN	GN	GN	GF	NN	GN	NN
Perchloroethylene	NN	NN	NN	NN	EE	NN	NN	NN
Phenol, crystals	GN	GF	GN	FG	EE	EN	FN	FF
Phosphoric acid (1–5%)	EE	EE	EE	EE	EE	EE	EE	EE
Phosphoric acid (85%)	EE	EE	EG	EG	EE	EG	EG	EE
Pine oil	GN	EG	EG	GF	EE	GF	FN	FF
Potassium hydroxide (1%)	EE	EE	EE	EE	EE	FN	EE	EE
Potassium hydroxide, conc.	EE	EE	EE	EE	EE	NN	EG	EE
Propane gas	NN	FN	NN	NN	EE	FN	EG	FF
Propylene glycol	EE	EE	EE	EE	EE	GF	FN	GG
Propylene oxide	EG	EE	EG	EG	EE	GF	FN	GG
Resorcinol, sat.	EE	EE	EE	EE	EE	GF	FN	NN
Resorcinol (5%)	EE	EE	EE	EE	EE	GF	GN	NN
Salicylaldehyde	EG	EE	EG	EG	EE	GF	FN	FF
Salicylic acid, powder	EE	EE	EE	EG	EE	EG	GF	EE

(*continued*)

Table 18 Continued

Chemical[a]	LDPE[b,c]	HDPE[b,c]	PP/PA[b,c]	PMP[b,c]	FEP/TFE/ PFA[b,c]	PC[b,c]	PVC[b,c]	PSF[b,c]
Salicylic acid, sat.	EE	EE	EE	EE	EE	EG	GF	EE
Salt solutions, metallic	EE	EE	EE	EE	EE	EE	EE	EE
Silver acetate	EE	EE	EE	EE	EE	EG	GG	EE
Silver nitrate	EG	EE	EG	EE	EE	EE	EG	EE
Sodium acetate, sat.	EE	EE	EE	EE	EE	EG	GF	EE
Sodium hydroxide (1%)	EE	EE	EE	EE	EE	FN	EE	EE
Sodium hydroxide (50% to sat.)	GG	EE	EE	EE	EE	NN	NN	EG
Sodium hypochlorite (15%)	EE	EE	EE	EE	EE	GF	EE	EE
Stearic acid, crystals	EE	EE	EE	EE	EE	EG	EG	GG
Sulfuric acid (1–6%)	EE	EE	EE	EE	EE	EE	EG	EE
Sulfuric acid (20%)	EE	EE	EG	EG	EE	EG	EG	EE
Sulfuric acid (60%)	EG	EE	EG	EG	EE	EF	EG	EE
Sulfuric acid (98%)	GG	GG	FN	GG	EE	NN	GN	NN
Sulfur dioxide, liq., 46 psi	NN	FN	NN	NN	EE	GN	FN	GG
Sulfur dioxide, wet or dry	EE	EE	EE	EE	EE	EG	EG	GG
Sulfur salts	FN	GF	FN	FN	EE	FN	NN	GG
Tartaric acid	EE	EE	EE	EE	EE	EG	EG	EE
Tetrahydrofuran	FN	GF	GF	FF	EE	NN	NN	NN
Thionyl chloride	NN	NN	NN	NN	EE	NN	NN	NN
Toluene	FN	GG	GF	FF	EE	FN	NN	NN
Tributyl citrate	GF	EG	GF	GF	EE	NN	FN	FF
Trichloroethane	NN	FN	NN	EE	EG	NN	NN	NN
Trichloroethylene	NN	FN	NN	NN	EE	NN	NN	NN
Triethylene glycol	EE	EE	EE	EE	EE	EG	GF	EE
Tripropylene glycol	EE	EE	EE	EE	EE	EG	GF	EE
Turpentine	FN	GG	GF	FF	EE	FN	GF	NN
Undecyl alcohol	EF	EG	EG	EG	EE	GF	EF	FF
Urea	EE	EE	EE	EG	EE	NN	GN	FF
Vinylidene chloride	NN	FN	NN	NN	EE	NN	NN	NN
Xylene	GN	GF	FN	FN	EE	NN	NN	NN
Zinc stearate	EE	EE	EE	EE	EE	EE	EG	EE

[a] LDPE; low-density polyethylene; HDPE, high-density polyethylene; PP/PA, polypropylene/polyallomer; PMP, polymethylpentene; PC, Polycarbonate; PVC, polyvinylchloride; PSF, polysulfone; FEP, Teflon FEP; TFE, Teflon TFE; PFA, Teflon PFA.

[b] E, excellent; G, good; F, fair; N, not recommended.

[c] The first letter of each pair applies to conditions at 20°C; the second to those at 50°C.

Source: Ref. 12.

Table 19 Mechanical Design Features for Minimizing Corrosion

1. Different materials of construction need to be electrically separated to prevent galvanic corrosion (see Fig. 10).
2. Design to avoid crevices and crevice corrosion (see Fig. 7).
3. Welding rod alloys should be more noble than the joined metals.
4. Fasteners made of dissimilar metal should be insulated from both metals.
5. Ensure effective separation between piping sections of dissimilar metals (see Fig. 9).
6. Piping should not be directly attached to dissimilar metal structures by conductive materials.
7. When different pipe material enters a vessel, use a dielectric gasket to prevent galvanic corrosion (see Fig. 10).
8. Use reasonable pipe line velocities (3–10 fps) to prevent settling and subsequent crevice corrosion.
9. Add filters in pipe lines to remove rust, debris, and such, which can settle and create an environment for crevice corrosion.
10. Avoid large turbulence (equivalent to impingement) by keeping flow-controlling devices away from bends, and use venturi-type construction versus orifice type.
11. Avoid large turbulence in piping from rapid pressure changes; that is, avoid cavitation and pipe-line hammer.
12. Use large pipe bends.
13. Heat exchangers should be slanted to provide proper drainage.
14. Welded joints are preferred over rivets or bolts.

or storage areas. A list of the major design features that prevent failures for process vessels are given in Table 20.

All reactors and process vessels shall be provided with overpressure relief protection (rupture disk, safety valve, or a combination of the two). Overpressure can be caused by several conditions (e.g., external fire exposure or runaway

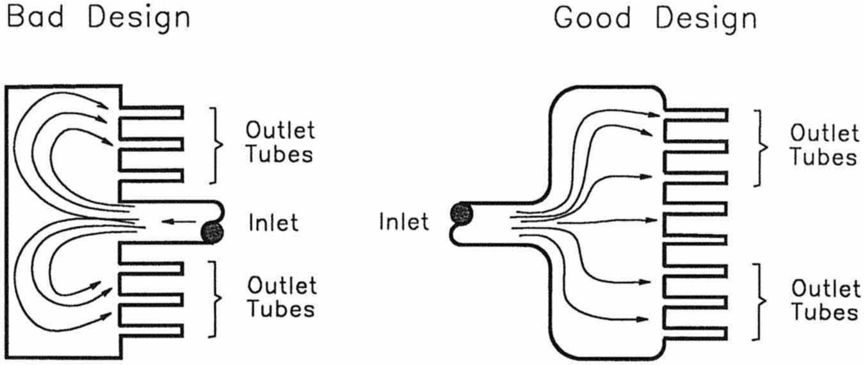

Figure 6 Good and bad designs for impingement corrosion.

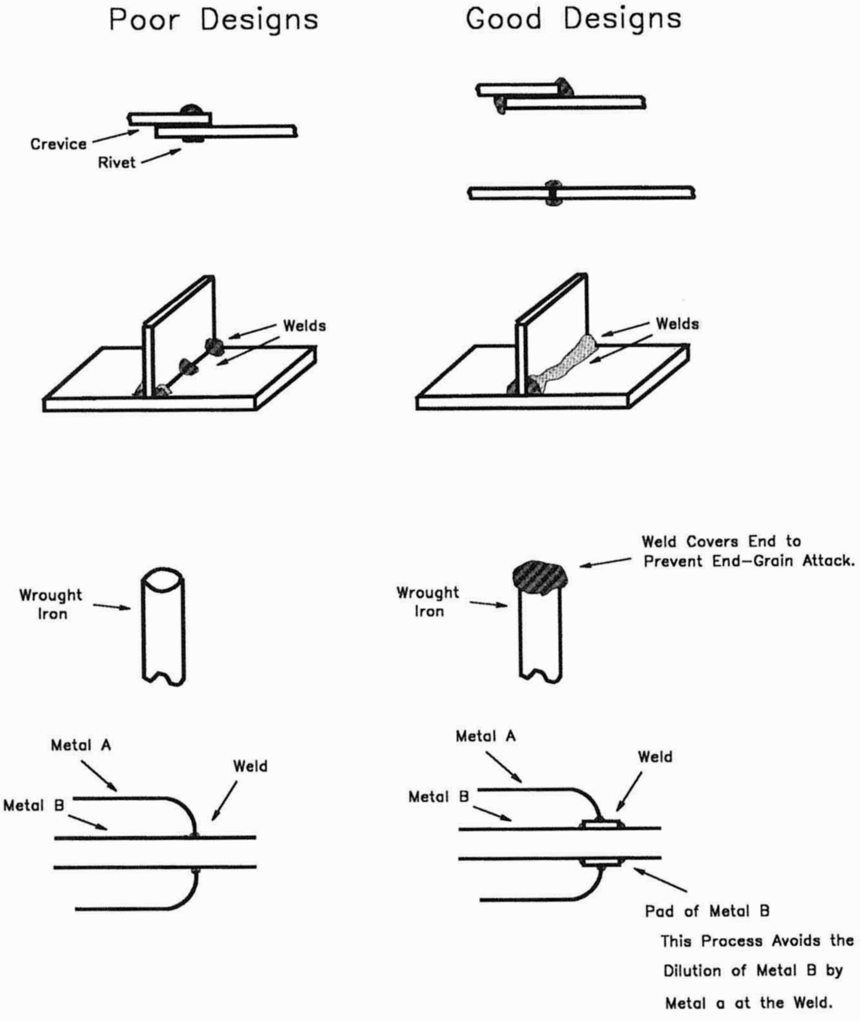

Figure 7 Welding techniques to avoid corrosion problems.

reactions). A complete list and discussion of the relief load requirements is presented in API RP521 [20].

All reaction systems should be screened for the possibility of a runaway reaction, as this very often results in the need for an appreciably larger relief device than other overpressure scenarios may require. Venting loads and relief device areas should be determined in a suitable adiabatic calorimeter, such as an accelerating rate calorimeter (ARC), vent-sizing package (VSP), or reaction sys-

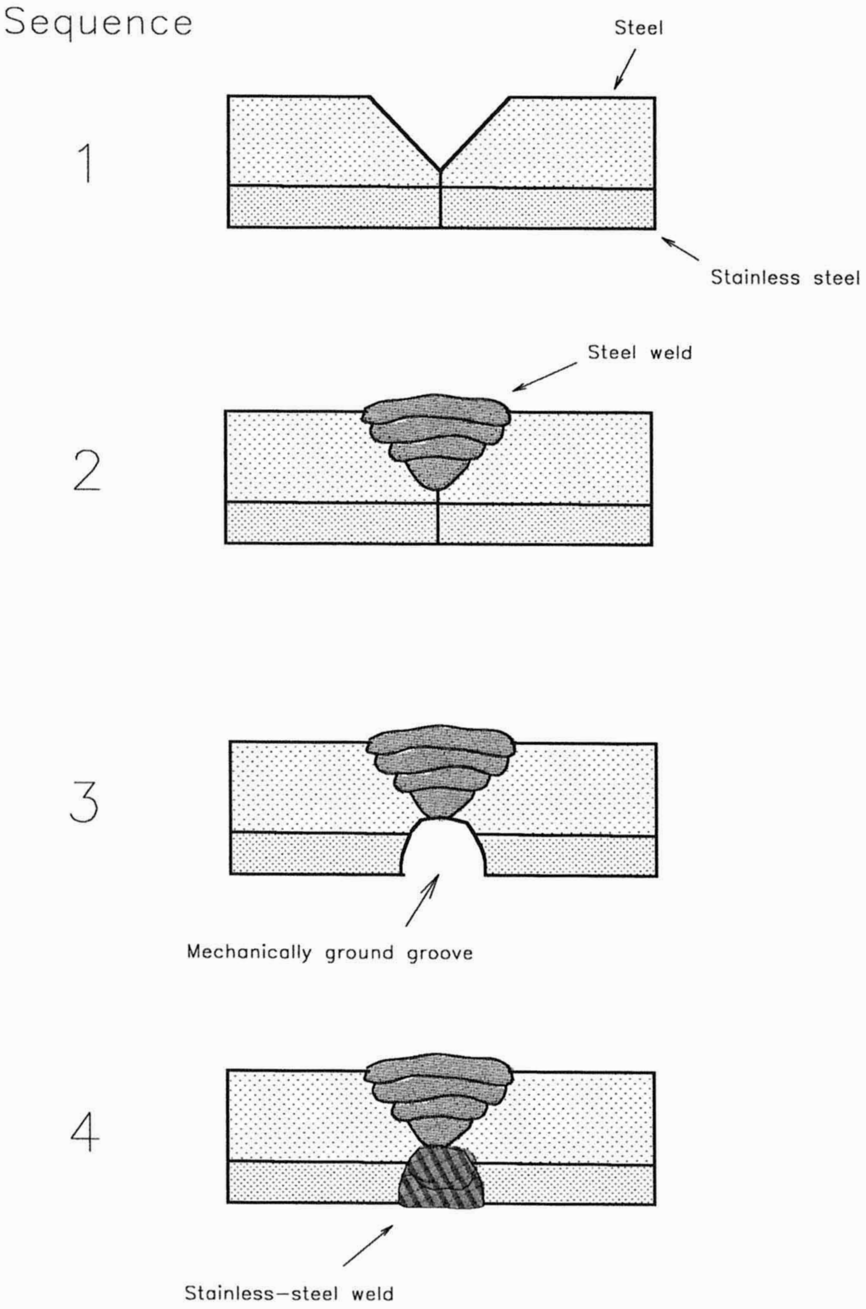

Figure 8 Welding technique to avoid corrosion problems when joining two metals.

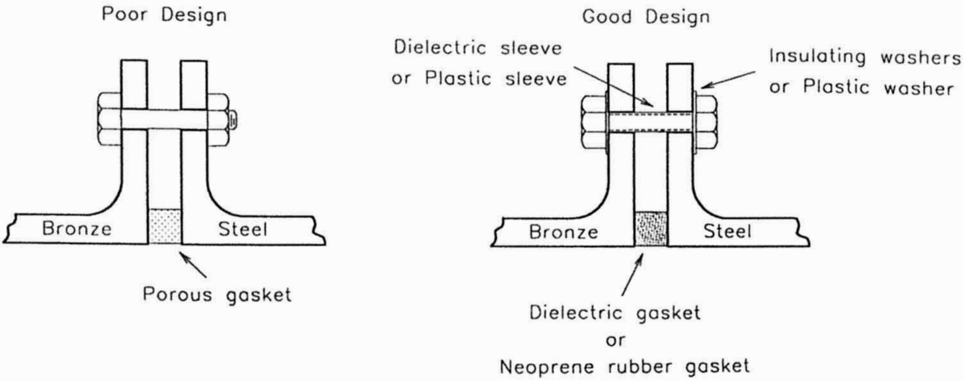

Figure 9 Gasket and bolt design for joining flanges of different materials.

tem-screening tool (RSST). The *DIERS Project Manual* describes these calorimeters and design methods for venting runaway reactions [21].

For a reactor in which a runaway reaction can occur, the set pressure of the safety valve or rupture disk should be chosen as close to the normal operating pressure as possible, but far enough above it so that normal-operating excursions will not cause premature rupture disk failure owing to fatigue or safety valve lifting and leakage. Usually, it is set at 10–20 psig above the maximum normal-operating pressure.

For rupture disks, the differential between the burst pressure and the normal-operating pressure is based on the standard manufacturing range and the normal

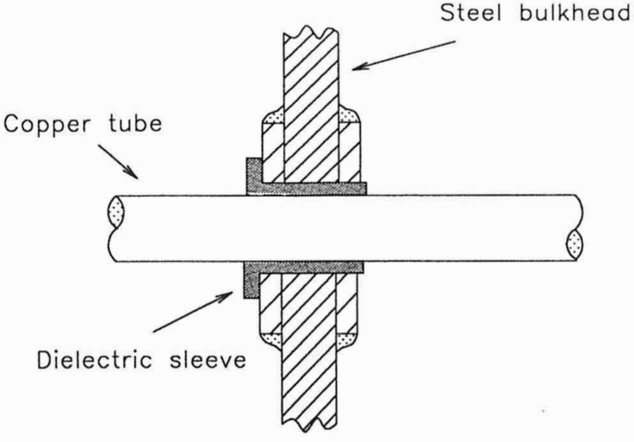

Figure 10 Design for preventing corrosion when piping penetrates partitions.

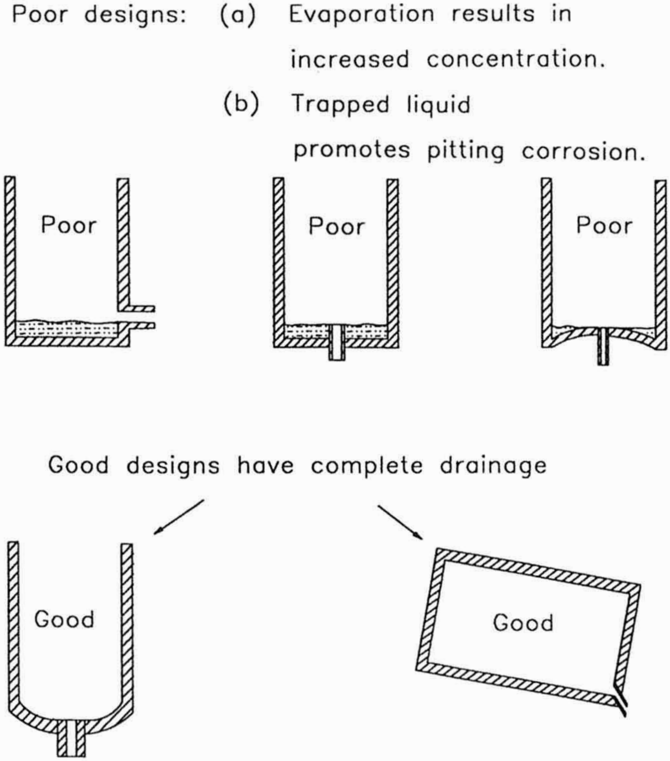

Figure 11 Good and poor vessel designs for preventing corrosion caused by poor drainage.

burst tolerances. Recommended operating pressures as a fraction of burst pressures for different disk types are available from the manufacturers.

Relief device discharge piping for runaway reactions usually will be handling a multiphase stream (vapor–liquid or vapor–liquid–solid); therefore, it should be routed first to a knockout drum–catch tank containment system to separate the vapors from the liquid. The vapor line from the knockout drum–catch tank should then be routed directly to the atmosphere or to a scrubber or flare stack if occupational health or environmental considerations require this. See Chapter 10 for discussion of knockout drums–catch tanks and effluent disposal systems.

For reactors fabricated of metal only (not glass-lined), it is recommended that a minimum design pressure of 50 psig be specified, even if the operating pressure is essentially atmospheric. This provides inherent safety for unexpected pressure swing events (pressure spikes). If an explosive mixture might be encountered, a deflagration test is recommended to determine by testing what internal blast

Table 20 Good Design Practices for Vessels

1. Minimize extreme cycles of temperature and pressure.
2. Prevent thermal shocks by minimizing the sudden change in temperatures.
3. Minimize stresses on vessels caused by unsupported loads or vibration.
4. Design vessel foundations to prevent settling.
5. Design vessels and surrounding piping for thermal expansion and contraction.
6. Support platforms and walkways independently; that is, do not support with the vessels.
7. Seal vessel insulation to prevent damage caused by moisture and corrosion.
8. When joining two metals, use metals that are as close as possible on the galvanic series.
9. Pickling and passivation of Monel and stainless steel vessels is specified to prevent pitting corrosion.
10. Traps in vessels that accumulate liquids should be avoided (see Fig. 11). These traps can collect materials that will settle and develop conditions to enhance crevice corrosion.
11. To avoid electrostatic charge problems when filling a vessel with flammable chemicals, the liquid is usually fed into the vessel by a dip pipe extending almost to the bottom of the vessel, or by an elbow that directs the liquid onto the wall. If an elbow is used, provide an impingement plate opposite the elbow to minimize impingement corrosion.

Source: Ref. 5.

pressure might occur and what the design pressure should be. Methods for minimizing or containing the effects of a deflagration are discussed later.

Several operating practices that will minimize the possibility of fires, deflagrations, and runaway reactions are presented in the following.

1. Reactants and Liquid Catalyst Addition

To avoid generation of electrostatic charges, all flammable liquids should be charged into a reactor or process vessel through a dip leg or an elbow pointed toward the wall, which causes the liquid to run down the reactor wall. When a fast addition rate of a reactant or catalyst could result in a runaway reaction, a restriction orifice should be installed in the feed line to limit the flow rate. A temperature sensor and switch, located in the vessel liquid, can also be installed to shut a block valve in the feed line if the temperature in the reactor begins to rise too rapidly.

To avoid overcharging (adding too great a quantity) of a reactant or catalyst that can cause a runaway reaction, the use of a gravity flow head tank, sized to hold only the quantity needed, should be considered.

2. Solids Addition

When solids (reactant or catalyst) are added to a batch reactor or process vessel containing flammable or toxic liquids, they should be charged by means of a hopper–rotary valve, lock-hopper, or screw feeder, so that the operator will not need to open the reactor manhole to add the solids and be exposed to hazardous conditions or chemicals. There should be instruments or procedures to assure that the solids are being fed. In addition, means should be provided to minimize the wetting of the solid's charge pipe walls by vapors from the reactor. Wet walls can result in the solid's adhesion and subsequent pipe plugging. A nitrogen sweep is often used to keep the charge pipe walls dry.

3. Agitation Monitoring

When a runaway reaction could result due to an unrecognized cessation of agitation (the shaft is still rotating, but the impeller has fallen off, or it has corroded beyond effectiveness), a malfunction detector should be installed in the reactor in the vicinity of the impeller. (An ammeter is not adequate to detect agitation stoppage.) The detector should have an alarm and an interlock to stop the feed of reactants or catalysts and to ensure an appropriate restart sequence. Backup power supply should be supplied to agitator motors for critical reactions involving toxic chemicals.

4. Inerting

Inerting, usually with a nitrogen blanket, is usually provided for reactors and process vessels containing flammable or toxic liquids. Inerts are added to eliminate the potential for having flammable or explosive vapor–air mixtures, which can be caused by the following conditions:

a. Addition of solids through the manhole (when there are not enough nozzles for an air lock valve, through which to add the solid).
b. Materials having a low minimum ignition energy or autoignition temperature.
c. Potential ignition sources that cannot be controlled adequately, such as
   - Spontaneous combustion
   - Reactive chemicals: pyrophoric materials, acetylides, peroxides, and water-reactive materials
   - Static electricity: material transfer where lines and vessels are not grounded properly, agitation of liquids of high dielectric strength, addition of liquids of high dielectric strength to vessels, addition to or agitation of liquids in vessels having nonconductive liners

Another purpose of inerting is to control oxygen concentrations if process materials are subject to peroxide formation or oxidation to form active compounds (acetylides, or others), or if materials in the process are degraded by atmospheric oxygen. An inert gas supply of sufficient capacity must be ensured, and the supply pressure must be monitored continuously, with low-pressure alarms provided.

5. Process Measures for Preventing Runaway Reactions

When runaway reactions are known to occur, and an excessively large relief device is needed, consideration should also be given to providing other means, such as those given in the following list, to prevent runaways from occurring. It is recommended that independent and redundant temperature instruments in the reactor be interlocked to actuate any of the following remedial actions at a specified high-temperature reading:

a. Add a considerable amount of cold diluent to reduce the reaction rate.
b. Rapidly depressure the reactor to a suitable location (flare or scrubber) if the reactor is under pressure.
c. Add an inhibitor to "kill" or "shortstop" the reaction.
d. Dump the reactor contents into a quench tank that contains cold diluent.

B. Glass-Lined Vessels

1. General

Glass-lined steel vessels [6] are often used for reactors and process vessels containing corrosive chemicals. They are resistant to chemical deterioration through the entire pH range, within temperature limits; alkaline solutions up to a pH of 14 can be stored or processed at temperatures up to 50°C. They can be used reliably to contain corrosive and toxic chemicals, if they are specified, installed, and operated correctly. Erosion, corrosion, mechanical, thermal, and operating abuses, however, can lead to major failures. The following section covers some of the important do's and don'ts for the specification, installation, and operation of glass-lined vessels.

2. Erosion and Corrosion

When a process stream is abrasive, it can result in vessel failures by erosion. If this is the case, the glass needs to be specified for this service; for example, a partially crystallized glass gives higher abrasion resistance.

Nozzles, agitator tips, and baffles can be protected against erosion by covering them with polytetrafluoroethylene (PTFE) or perfluoroethylene propylene (FEP) boots. When handling abrasives, the agitation speed should be set at the lowest value that is consistent with the mixing requirements.

3. Gaskets

Use only gaskets that have been recommended by the manufacturer. Special gasket materials and gasket installation procedures are needed to prevent glass cracking and subsequent leakage. Leakage through a gasket can create toxicity problems; however, an acid leak can also corrode the steel substrate and eventually undermine the glass.

A more serious problem is acid spalling. Hydrogen is generated if acid leaks out onto the steel shell. This hydrogen diffuses through the steel and collects behind the glass, causing the glass to pop off.

4. Jacket Corrosion

If brine is used as a cooling medium, and the same jacket is used for heating by steam, the corrosion rate is accelerated. Here, the jacket may fail prematurely. A design solution to this problem is to specify glass-lined vessels with split-pipe coil jackets that provide separate circuits for heating and cooling. In recent years, heat transfer fluid systems (e.g., Dowtherm, Syltherm, or other) are being used for both heating and cooling.

5. Mechanical Shock

Glass failures occurring from mechanical shock are frequently the result of human error. Serious vessel damage is inevitable as a result of an internal or external shock. Damage often occurs as a result of dropping tools or metal parts into an open vessel. Open vessels should always be protected with covers (e.g., wood or foam padding), and strict rules of behavior should be maintained around the glass vessels. All loose objects should be removed from pockets before approaching an open vessel. When maintenance is required inside glass-lined vessels, the maintenance personnel must use a foam covering on the bottom of the vessel, wear clean or new rubber shoe covers, use wood or fiberglass ladders, and pass tools into and out of the vessel in canvas bags, or equivalent. After leaving a vessel, conduct a thorough inspection to remove all miscellaneous tools and objects.

When adding bulk solids to a glass-lined vessel, load the solids through appropriate charging equipment (see Sec. III.A.2), and a screen. This will prevent the addition of tramp metal objects.

6. Mechanical Stress

Nozzles can be damaged easily owing to overstressing; for example: overtorquing gaskets and flanges, torquing with improperly supported pipelines, and stress caused by thermal expansion. Properly and carefully installed flexible connections or expansion joints can be installed between the nozzle and the piping to prevent these problems. When using flexible-type connections, frequent inspections and maintenance is necessary to prevent failures.

7. Thermal Shock

Thermal shock is due to an abrupt change in temperature. Problems of this nature are prevented by specifying, through the process design, gradual temperature changes.

An improperly supported jacket can also develop damaging stresses within the entire vessel during temperature cycles. The jacket should be supported nonrestrictively to prevent this potential problem.

A damaging stress problem can occur if jacket inlet impingement baffles are lost. These baffles should be installed in the jacket coupling to prevent the direct point impingement of the heating or cooling medium onto the outside glass-lined steel (inside jacket). The proper installation of these baffles should be checked before start-ups.

Heating and cooling cycles in a glass-lined reactor can cause thermal shock damage if proper consideration is not given to the batch liquid and heat transfer media temperatures. Thermal shock failure occurs because of abrupt changes in the temperature of the glass-lining and results in relatively small, but thick, pieces of glass spalling off in rigid fractures. Depending on the contour of the area and the manner in which thermal shock occurs, the failure may exhibit a shattered or "elephant skin" appearance. In most cases of thermal shock, the steel substrate will be exposed.

There are four operations in which sudden temperature variations can cause thermal shock:

a. Sudden cooling of a glassed surface by subjecting a preheated surface to a cold liquid.
b. Sudden heating of the vessel wall by rapid circulation of a very hot fluid through the jacket of a cold vessel.
c. Sudden heating of the glassed surface by introducing a hot liquid into a cold vessel.
d. Sudden cooling of the vessel wall by rapid circulation of a cold fluid through the jacket of a preheated vessel.

In operations *a* and *b*, the glass lining tends to lose compressive stress, causing the lining to weaken. In operations *c* and *d*, the glass lining is subjected to sudden overcompression, causing the glass to fail.

Ladder failure is an unusual thermal shock-type failure. It occurs when residual steam condenses in a jacket, creating a vacuum. This vacuum, in turn, can draw some cold water into the jacket from a water inlet or exit line. The cold water can then flow down the vessel wall, which is hot. The resulting stresses can damage the glass; this damage sometimes looks like the rungs of a "ladder." The rungs are the regions at which the stressed glass shatters. This process relieves the stress within the glass in that particular location. As the water continues to cool the metal within the jacket, another region of glass is stressed until it is relieved by shattering another "rung" of glass. This is prevented with an automated vent to prevent a vacuum.

Maximum recommended temperature differences to prevent thermal shock can be obtained from fabricators of glass-lined vessels.

8. Internal Freezing

Glass-lined steel vessels have accessories, such as agitators, baffles, pH probes, and thermowells. These accessories are hollow; that is, a hollow tube that is glass-lined on the outside. If the vessel is installed outside a building in a cold climate, then entrapped water may freeze, expand, and damage the glass on the accessory. This problem is prevented by drying the internals and sealing them before they are placed outside.

9. Direct Impingement

Glass has excellent resistance to all acids, except hydrofluoric and concentrated phosphoric. It is also attacked by hot alkaline solutions. Glass damage will occur, for example, if a hot caustic solution is added through a nozzle that directs the flow down the glass wall. This type of problem can usually be solved by adding the caustic solution through a dip pipe into a highly agitated region.

The direct impingement of glass with neutral water by condensing water vapor is also problematic. This is especially a problem when condensing steam at temperatures over 212°F and when holding neutral water above 275°F. This particular problem is solved by adding a small amount of acid to the water.

Impingement damage can also be in the form of an electrostatic discharge. Violent agitation of two phases (one that is nonconductive) with a free fall addition is a worse case scenario. Here, an electrostatic charge is generated as a result of the separation of phases caused by agitation, and a charge is additionally developed by the separation of the liquid at the inlet nozzle. Solutions to this type problem include (1) charge though a grounded dip pipe, (2) reduce agitation speed, and (3) add an antistatic agent to the mixture.

10. Pinhole Leaks

Pinhole leaks can rapidly develop into a major problem. This is an especially difficult problem when handling highly toxic chemicals. These problems are eliminated or minimized by (1) using the techniques described earlier, (2) making extensive pilot tests under highly controlled conditions to identify the best operating conditions, (3) using frequent and extensive inspection techniques (for example, spark tests) to identify pinhole leaks, and (4) using a continuous electrical surveillance technique to pinpoint leaks at an early stage of development.

11. Fluoride Ion Damage

Fluoride ion concentrations higher than about 20 ppm can also promote extensive damage to glass linings. The source of the fluoride ions may be subtle; for example, buildup in recycle streams or as a contaminant in a raw material. This problem is solved by periodically adding precipitated silica, which acts as a fluoride trap.

12. Vessel Repair

When a glass pinhole is identified, it can usually be repaired with tantalum metal patches, PTFE gaskets, and a furan resin cement. If the vessel is used with sulfuric acid or hydrogen, then a platinum or gold–platinum alloy is used instead of tantalum.

C. Nonmetallic Vessels

Vessels made of nonmetallic materials such as plastics (e.g., polyethylene), FRP, or Haveg are often used to store or process corrosive liquids, such as streams containing hydrochloric acid. However, if these corrosive streams also contain highly toxic liquids, nonmetallic vessels should not be used for the following reasons:

a. They are fragile in comparison with metallic vessels and can more easily be punctured or fractured.
b. They will not withstand thermal fluxes from an external fire for any appreciable time.
c. Their nozzles are not as strong as metallic ones and will fail readily if not properly designed. Quite often flexible connections to piping are required.

D. Containment

1. Containment of Deflagrations

If the contents of a vessel are flammable, there then exists the possibility of an explosion within the vessel, and this event may rupture the vessel. This is particularly dangerous when the vessel contains a toxic chemical. This dangerous discharge can be prevented by increasing the pressure specification of the vessel to withstand deflagration pressures [7].

The design limitations for pressure containment include the following: (1) the concept cannot be used for detonations, (2) it cannot be used for L/D ratios over 5, (3) it cannot be used for systems containing more than one vessel, and (4) it cannot be used for vessels with initial pressures exceeding 30 psig. These limitations may be modified if the appropriate testing is conducted within a controlled research environment.

These methods are used to prevent the vessel from rupturing [use the ultimate strength of the vessel; see Eq. (1)], or to prevent the vessel from permanent deformation [use the yield strength of the vessel; in Eq. (2)]. If the vessel is designed to prevent a rupture, then a deflagration will deform the vessel. Under this situation, the vessel will need to be replaced before restarting the plant. This may be an expensive design option; however, it may be justified if the deflagration scenario is an improbable event. Although it may be expensive, it is certainly less expensive than the consequence of a large spill. Vessels that are designed for deflagrations also need to be designed to withstand a full vacuum.

When designing for deflagrations, the vessel wall thickness is computed using the P_r or P_d, which are determined in Eq. (1) or Eq. (2), respectively:

$$P_r = \frac{1.5[R(P_i + 14.7) - 14.7]}{F_u} \tag{1}$$

$$P_d = \frac{1.5[R(P_i + 14.7) - 14.7]}{F_y} \tag{2}$$

where:

P_r is the design pressure (psig) to prevent rupture.
P_d is the design pressure (psig) to prevent deformation.
P_i is the maximum initial pressure (psig).
R is the ratio of the maximum deflagration pressure over the maximum initial pressure.
F_u is the ratio of the ultimate stress of the vessel to the allowable stress.
F_y is the ratio of the yield stress of the vessel to the allowable stress.
R is 9 for most gas and air mixtures, and is 10 for dust and air mixtures. For St-3 class dust and air mixtures R is 13.

A more accurate R is determined experimentally.
When the vessel temperature (T_i) is below 25°C, the value of R is adjusted as follows:

$$\text{New } R = \text{Old } R\left(\frac{298}{273 + T_i}\right) \tag{3}$$

For low-carbon steel and low-alloy stainless steel vessels, $F_u = 4.0$ and $F_y = 2.0$. For systems operating under a vacuum, the initial pressure is assumed to be 0 psig. Additional details are given in NFPA 69 [7].

When the vessel is designed to contain a deflagration, the attached pipe lines and equipment will have pressures equal to or greater than this deflagration pressure. The pressures may be significantly higher through pressure piling [8]; therefore, these piping systems need to be isolated or vented. If isolation valves are used, they must be closed rapidly by (1) detecting the deflagration in the vessel (infrared, pressure, or heat sensor), and (2) initiating and completing the valve closure before the pressure front reaches the valve.

2. Total Containment

When handling highly toxic chemicals, the designer has many options ranging from (1) an outside facility with frequent inspections, continuous monitoring, and the appropriate use of personal protection; to (2) a totally enclosed facility where all vessels and lines are totally enclosed, all exit gases are scrubbed or incinerated, monitoring triggers a complete and safe shutdown, ventilated isolation booths are used to enter and exit the facility, and everyone entering the facility wears protective clothing and self-contained breathing apparatus.

The various containment options include (1) double-walled construction, (2) reactor systems in large tanks, (3) subsurface containment, and (4) the entire plant

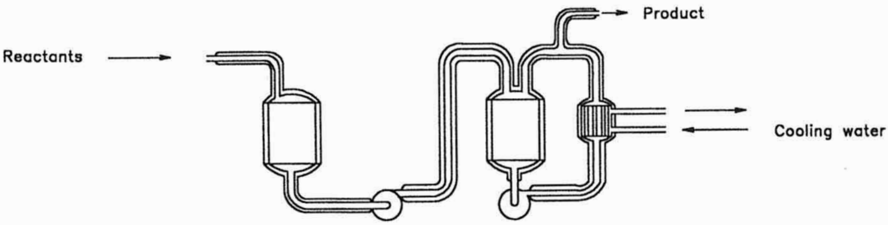

Figure 12 Double-Walled containment.

inside a large tank. These options are illustrated in Figs. 12–15, respectively. Each of these options may use different monitoring methods, different vent gas treatment techniques, different ventilation methods, different operating philosophies, and different maintenance philosophies. The actual design is dependent on the level of toxicity, the corrosion and reactivity characteristics of the chemicals, the process-operating conditions, the location of the facility, the standards and regulations of the region, and the design and operating skills of the personnel. The design engineers and the facility management must study the various options and choose the best design. In this evaluation phase, it should be recognized that the very complex and totally automated design may not be the safest design. The safest design will include an appropriate balance of operator skills and training, management systems and control, and automation.

IV. PROCESS EQUIPMENT

A. Agitators

Besides monitoring for impeller integrity (discussed in Sec. III.A), various other design concerns must be taken into consideration when handling highly toxic chemicals.

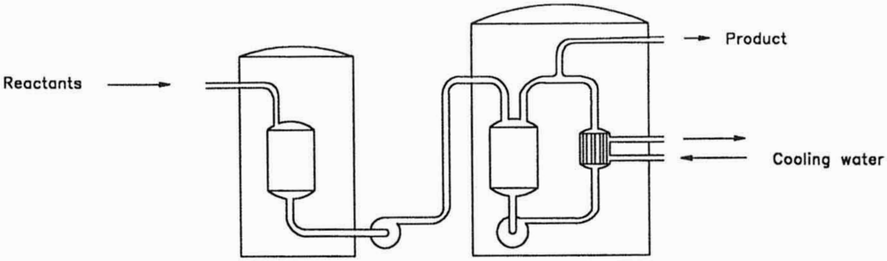

Figure 13 Vessel-in-vessel containment.

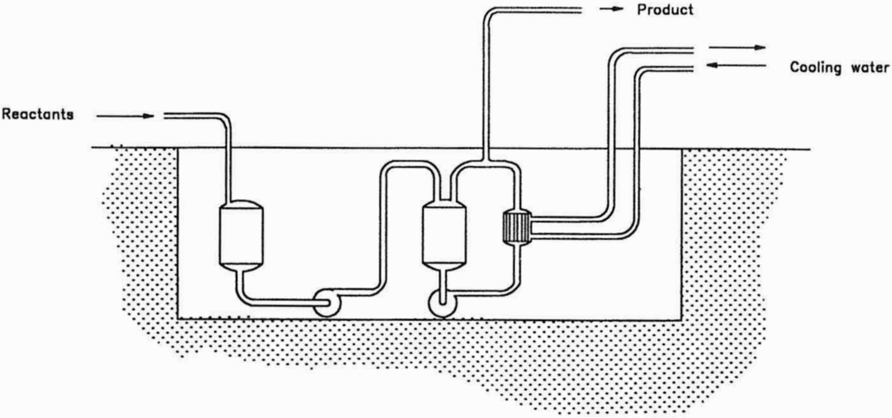

Figure 14 Containment by underground construction.

a. Shaft sealing is of great concern when mixing highly toxic liquids to prevent emissions of hazardous to health vapors. A double or a tandem mechanical seal, with a barrier liquid between the seals can be used for this purpose. An alternate type of mechanical seal, which is also effective, is the double dry mechanical seal, with pressurized inert gas (usually nitrogen) applied between the seals. The nitrogen flows across the seal faces at a very low flow rate. The inboard seal leaks the gas into the vessel and the outboard seal leaks into the atmosphere. This type of seal is used frequently for agitator shafts in vessels used in pharmaceutical and biotechnological processes, it precludes

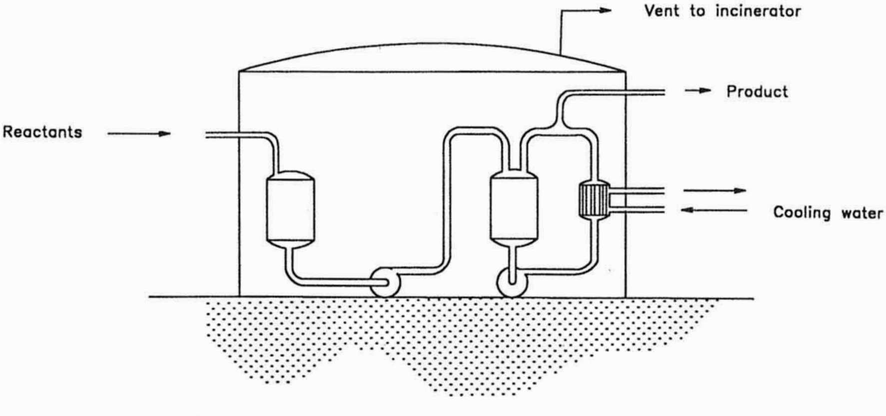

Figure 15 Containment by setting the process in a large vessel.

leakage of seal liquid into the process stream (which is often unacceptable), or it prevents emission of harmful microorganisms into the atmosphere.

b. Agitator shafts in tall vessels may require bottom bearings to prevent shaft whip, which could cause shaft bending and mechanical seal failure. When the fluid being mixed contains abrasive catalyst, filter aid, or crystalline product, erosive damage could occur to the bottom bearing. The agitator vendor should be consulted for advice.
c. Agitator nozzles should be analyzed and designed to ensure that they are strong enough to support the agitator and motor weight and to handle the rotational loads.
d. Agitators should be designed so that they do not run too close to the "critical shaft speed."

B. Centrifuges

When handling slurries containing highly toxic liquids, standard-type batch centrifuges should not be used if possible. Even bottom-unloading vertical basket centrifuges require the operator to scrape out the "heel" by hand. Other types of centrifuges that should be considered are (1) inverting basket semibatch centrifuge, (2) tubular bowl, (3) disk bowl, and (4) decanter-type centrifuges. These types do not require any contact with the centrifuge cake by the operator. If for process or economic reasons, it is decided to use a batch, vertical basket centrifuge, then it should be installed in a well-ventilated room (connected to a scrubber), and the operator should wear protective clothing when handling the cake.

If the slurry also contains a flammable liquid, then the centrifuge should be inerted to prevent fires and deflagrations. A good discussion of inerting and other operating practices and centrifuge safety design features is presented by Lindley [22].

Other potential problems of centrifuges include

Mechanical friction from bearings
Vibration
Leaking seals
Static electricity
Overspeed

Redundant monitoring of critical components, along with reliable maintenance procedures for both the mechanical equipment and the monitoring instruments is strongly recommended.

C. Dryers

The hazards associated with dryers are usually fires, deflagrations, and emissions of toxic dusts or vapors. When drying wet solids containing toxic liquids, or if the dry solids themselves are toxic, a dryer should be selected that can be fabricated vapor- and dust-tight. To prevent fires or deflagrations, and to mitigate their effects, several measures can be taken, such as inerting, explosion suppression, explosion containment design of the dryer, and the elimination of ignition sources. Explosion venting is not recommended if highly toxic wet solids are being dried, as they will be expelled into the atmosphere. A good reference on the prevention of fires and explosions in dryers is the book by Abbott [23].

D. Filters

The hazards involved in filtering highly toxic slurries are the same as those occurring in centrifugation. Filters that require the operator to manually remove the cake from the filter leaves or cartridges should not be used. Various filters are available that can be used, such as

a. Horizontal leaf pressure filters in which the leaves are rotated and the cake is spun off with, or without, the assistance of sluicing liquid
b. Cartridge filters in which the cake is removed by backflushing

Pressure filters are usually designed as pressure vessels (design pressure above 15 psig) and require a pressure relief valve or rupture disk, connected to appropriate disposal equipment, to provide overpressure protection.

E. Heat Exchangers

Common safety problems of heat exchangers include tube rupture, leaking, fouling, tube vibration, polymerization, and solidification. Failures in heat exchangers result in pressure changes (overpressure or underpressure) and contamination of the heat transfer fluid or process fluid. The primary hazard is the failure to maintain the separation of materials that might react violently on contact. Therefore, methods to monitor for these conditions should be provided.

Double-tube sheets should be used for heat exchangers handling highly toxic chemicals. Their design is discussed by Yokell [24].

Overpressure relief is usually required for heat exchangers to protect against the effects of tube rupture. The calculation of the venting load requirements are discussed in APRI RP521 [20].

The careful and proper selection of materials of construction to minimize corrosion and fouling on both the shell and tube sides is even more critical for highly toxic fluids than for flammable fluids.

REFERENCES

1. D. Brandt, W. George, C. Hathaway, and N. McClentock, Plant layout, *Chem. Eng.*, Apr: 89 (1992).

2. *Perry's Chemical Engineers' Handbook*, 6th ed., McGraw Hill, New York, 1984.
3. M. Henthorne, Fundamentals of corrosion, *Chem. Eng.*, May: 127 (1971).
4. R. K. Swandly, Corrosion charts: Guides to material selection, *Chem. Eng.*, Nov: 186 (1962).
5. M. Henthorne, Understanding corrosion, *Chem. Eng.*, Dec: 19 (1972).
6. M. J. Lerman and S. Carrabotla, Maximizing the life of glass-lined reactors, *Chem. Eng. Prog.*, Dec: 3 (1991).
7. National Fire Protection Association (NFPA), *NFPA 69, Exposion Prevention Systems*, NFPA, Quincy, MA, 1992.
8. D. A. Crowl and J. F. Louvar, *Chemical Process Safety: Fundamentals With Applications*, Prentice Hall, Englewood Cliffs, NJ, 1990.
9. F. L. LaQue, *Corrosion Handbook*, John Wiley & Sons, New York, 1948.
10. Brochure of the Interlox Company.
11. R. B. Norden, Materials of construction, *Chem. Eng.*, Nov: 186 (1962).
12. Laboratory Safety Supply Catalogue
13. National Association of Corrosion Engineers (NACE), *Corrosion Data Survey*: Metals Section, 6th ed., NACE, Houston, TX, 1985.
14. National Association of Corrosion Engineers (NACE), *Corrosion Data Survey*: Nonmetals Section, 5th ed., NACE, Houston, TX, 1975.
15. P. A. Schweitzer, *Corrosion Resistance Tables*, Parts A and B, Marcel Dekker, New York, 1991.
16. R. I. Landrum, *Fundamentals of Designing for Corrosion Control: A Corrosion Aid for the Designer*, National Association of Corrosion Engineers, Houston, TX, 1989.
17. N. P. Cheremisinoff, *Materials Selection Deskbook*, Sci Tech Publishers, Matawan, NJ, 1991.
18. C. P. Dillon, *Corrosion Control in the Chemical Process Industries*, McGraw-Hill, New York, 1986.
19. R. E. Gackenbach, *Materials Selection for Process Plants*, Reinhold Publishing, New York, 1960.
20. American Petroleum Institute (API), API RP 521, *Guide for Pressure-Relieving and Depressuring Systems*, 3rd ed., API, Washington, DC, 1990.
21. American Institute of Chemical Engineers (AIChE), *Emergency Relief System Design Using DIERS Technology*, (*The DIERS Project Manual*), AIChE, New York, 1992.
22. J. Lindley, *Users Guide for the Safe Operation of Centrifuges*, 2nd ed., The Institution of Chemical Engineers, Rugby, UK, 1987.
23. J. Abbott, ed., *Prevention of Fires and Explosions on Dryers: A Users Guide*, 2nd ed., The Institution of Chemical Engineers, Rugby, UK, 1990.
24. S. Yokell, Double-tubesheet heat exchanger design stops shell-tube leakage, *Chem. Eng.*, May 14: 133–136 (1973).

6

Design Considerations for Piping and Instrumentation

Joseph F. Louvar
BASF Corporation, Wyandotte, Michigan

Stanley S. Grossel
Process Safety & Design, Inc., Clifton, New Jersey

I. PIPING

A. General

This section covers the major principles and practices concerning piping systems, which are particularly important for handling highly toxic chemicals. The American Society of Mechanical Engineers (ASME) *Code for Pressure Piping* [1], especially B13.3, is an important reference that describes the minimum requirements; highlights of this standard are also included.

Piping systems are usually made with seamless pipe and welded connections; for example, fittings welded to pipe, and a few flanged joints where access is necessary. Since flanges are a major potential sources of leaks, the number of flanged connections are minimized. A few flanges are necessary to (1) join large pre-fabricated sections of pipe, (2) connect sections of pipe to equipment, (3) connect pipe to valves, and (4) connect to removable spools for access and cleaning.

B. Gaskets

Gaskets [2] are the weakest part of flanged joints. A leaky gasket can be a major hazard if the leak is a toxic or a flammable chemical. Spiral-wound gaskets are the gaskets of choice because they have inner and outer rings that retain the gasket in the flanged seal surface. They have a heavy construction that prevents gasket blowouts. This heavy construction requires higher bolt torques to obtain an adequate seal. Consequently, high-strength bolts and nuts are required, together with the correct torque and torque procedures.

Even after the correct gasket and torque procedures are used, it is still possible to have flange failures. These failures are usually the result of poor flange face alignment during construction, or are due to dirty or damaged gaskets. Russell discusses problems with spiral-wound gaskets and recommended practices to minimize them [3].

C. Double-Contained Piping

The Environmental Protection Agency (EPA) regulations require double-containment pipes [4] for transporting hazardous chemicals underground. This is also a viable alternative for aboveground installations. Although the first costs for double-containment are relatively high, the long-term accumulated cost may be lower by eliminating cleanup, remediation, downtime, and damage litigation. A checklist for double-containment piping is given in Table 1. A book on double-containment piping has been written by Ziu [5], which should be consulted for more details.

D. Piping Design

1. General

Many excellent design concepts and practices for designing safer plants are given in the books by Kletz [6,7], and The Center for Chemical Process Safety (CCPS) (see Ref. [8]). Their design emphasis is to enhance safety by (1) reducing the inventory of hazardous materials; (2) storing hazardous materials under less severe conditions (lower temperatures, lower pressures, and lower concen-

Table 1 Design Checklist for Double-Containment Piping

1. Design the containment pipe to protect the service pipe and to contain leaks for long periods.
2. Containment must be designed to withstand burial loading.
3. Include continuous, rapid, and local leak detection to limit trenching area for repairs.
4. Use multiple pipe in single-containment pipe where practical.
5. Note temperature and pressure limitations of PP, PE, PVC, and CPVC systems.
6. Use butt fusion and extrusion welding (not hot-air welding).
7. Design to handle stress differences between two different pipes.
8. PE requires continuous support if used aboveground.
9. Construct homogeneous joints by fusion or weld process.
10. Solvent welding is not recommended except for nonpressure gravity systems with little temperature differences between two pipes.
11. Design support spacers for internal and external stresses.

trations); and (3) including special design features to prevent or minimize accidental releases. Some of the more important practices from these references are given in Table 2. Table 3 also presents recommendations for use in identification, design, installation, operation, and maintenance of piping systems used for transporting highly toxic fluids [11].

2. Keep It Small

The important concept of keeping it small (Fig. 1) includes minimizing the storage of raw materials and toxic intermediates, smaller exit lines from vessels to minimize leaks after the line is opened by error or failure, minimizing the number of flanges, minimizing pumps using gravity charging, and minimizing the volume of material in blocked lines. This concept also includes building two smaller plants, instead of one larger one; however, the two smaller plants will also have more lines, pumps, flanges, and vessels, which are all potential new sources of leaks. The designer needs to evaluate the advantages and disadvantages of each alternative before developing design decisions.

3. Keep It Simple

The concept of keeping it simple is illustrated in Fig. 2. This design concept has major advantages, including easier to understand, easier to describe, and easier to maintain; therefore, it enhances a mistake-free operation. In summary, a simple design is the safest design. If the design is originally simple, then these advantages will very likely exist for the entire life of the plant, which may range from 2 to 50 years. After a plant is installed with this organized, clear, and safe design, then later modifications will probably incorporate these same simple design standards. These standards will be maintained if the plant's management of change program specifies this important standard.

Simple design concepts are achieved only if management delegates this specific responsibility to the project leader. If simplicity is not delegated, and if the appropriate follow-up techniques are not used, then, the final design will be complex. This complexity will unfortunately be retained for the entire life of the plant.

4. Change It Early

The lowest-cost system and the safest system is achieved by conducting hazards review analyses during the early stages of the project. Safety reviews during the early stages will be more open, creative, and productive. At this time, the review team will be open to make changes, because major changes at this stage are relatively insignificant. As illustrated in Fig. 3, the review process at the later stages of a project will be inhibited, because even minor changes at this later stage are relatively large [6].

5. Prevent Backflow [10]

One feature of a piping system that has a major influence on safety is protection against backflow [10]. It is well known that inadvertent backflow has resulted in

Table 2 Checklist for Piping System Practices

1. Use seamless pipe.
2. All joints should be butt welded or flanged (welding-neck flanges).
3. Use metal–polyfluorinated ethylene and metal–graphite spiral-wound gaskets.
4. Use high-strength alloy bolts (A 193-87 and A 194 heavy hex nuts) with spiral-wound gaskets.
5. Use pipe loops to control movement and vibration at equipment connections. Avoid the use of bellows.
6. Use sliding supports for thermal expansion.
7. Support piping and valves separately (do not let valves or pumps support piping).
8. Prevent water hammer via regulated valve motion to a reasonable speed.
9. Do not force fit misaligned pipe sections.
10. Use heavier grade flanges.
11. Avoid dead-ends of rarely used piping branches.
12. Keep piping systems simple to facilitate operation and maintenance.
13. Design to prevent liquid holdup; pitch pipe runs.
14. Limit size of vessel drain lines (limit rate of release).
15. Avoid blocking liquid in sections of pipe.
16. Equip vessel drain lines with two valves, one remotely operated.
17. Design to prevent single-valve failures, which lead to major releases.
18. Use correct flange, gasket combinations and torque bolts correctly.
19. Use expansion loops of approximately 10 ft for every 100 ft of pipe.
20. Use frequent pipe supports, one every 7 ft or less for plastic pipe.
21. Install field sensors or detectors.
22. Use double-walled pipe with internal monitor where appropriate.
23. Pipe reliefs from pipes and pumps to total containment systems.
24. Install remotely operated block valves in transfer lines.
25. Add redundancy to improve safety.
26. Install temperature device to detect (and shut off) dead-headed pumps.
27. Place drain valves at low end of pipe lines.
28. Minimize use of flanges; that is, preweld large sections of pipe before installing.
29. Use spring-loaded check valves with PTFE seats.
30. Use metal or glass-lined or plastic-lined pipe. Do not use solid plastic pipe with flammable or toxic chemicals, because fires would create additional fire or toxicity problems.
31. Keep inventories of hazardous materials at a minimum.
32. Use fail-safe designs on control valves and appropriate block and bleed valve systems.
33. Grade process areas to have releases (gas of liquids) flow away from populated areas.
34. Separate key process areas (process from control rooms, process from utilities and services, process from administration areas), and route piping away from traffic.
35. Use dip-pipes when adding fluids to vessels (especially flammable fluids).
36. If possible, keep volumes small (vapor cloud explosion is unlikely with 6 ton or less of vapor).
37. Use gravity flow to eliminate pumps.
38. Conduct safety reviews early in the design phase of projects, and several times during later phases of the projects.
39. Keep design and plant appearance simple and easy to understand and operate.
40. Place manual valves and sample points accessible to operators.
41. Conduct fault-tree risk analyses to choose the best alternatives when adding redundancy.

Table 3 Recommended Practices for Toxic Systems Piping

Do	Do not
Identify and segregate hazardous and toxic piping systems.	View hazardous and toxic piping systems as conventional systems.
Determine consequence of piping failure; for example, quantities released, personnel exposure, harm to the environment, and loss of property.	Assume piping system cannot fail.
Understand operating mode of system, including service variations and upset conditions.	Expect operating conditions to be without variation.
Consider dynamic effects; such as water hammer, vibrations, and seismic.	Overlook potential dynamic effects.
Perform stress analysis incorporating total loadings expected.	Disregard dynamic effects working in combination with steady-state loads.
Select materials that will not deteriorate in service.	Choose materials subject to corrosive attack.
Use ductile materials only.	Use low-ductility materials, such as cast iron and glass.
Eliminate or minimize the use of mechanical joints; provide safeguarding.	Use mechanical joints indiscriminately without safeguarding.
Provide smooth transitions at welded joints.	Have abrupt changes in joint geometry.
Choose valving consistent with hazardous and toxic service. Provide designs to minimize fugitive emissions.	Use conventional stem-packing.
Distribute discontinuities (i.e., shape and materials).	Concentrate discontinuities (local stress risers).
Use appropriate NDE techniques to assure quality fabrication and construction.	Rely totally on hydrostatic pressure tests.
Arrange plant equipment and piping considering the toxic and hazardous character of the fluid conveyed.	Arrange plant components without considerations of prevailing wind, isolation and buffer areas, need for barriers, and engineered safeguards.
Use piping geometry to compensate for thermal expansion and contraction.	Use expansion joints.
Provide a collection and disposal system for pressure relief of toxic and hazardous systems during upset conditions.	Vent directly to atmosphere without proper treatment.
Instrument the plant to minimize worker and public exposure to potential accidental releases of toxic and hazardous fluids.	Provide instrumentation systems that require local control or are maintenance problems.

(continued)

Table 3 Continued

Do	Do not
Isolate toxic and hazardous piping systems during fabrication, erection, testing, and commissioning to ensure proper NDE requirements are met.	Commingle with other conventional piping materials and fabrication.
Provide an in-service monitoring program for early detection of leaks.	Wait for a catstrophic event.
Maintain service records through the life of system. Periodically monitor critical elements.	Install the system and forget about it.
Design and maintain supports as an integral part of the piping system.	Treat piping supports as independent components, not an integral part of the piping system.
Provide details of critical elements to construction personnel.	Leave critical fabrication and assembly details to be provided in the field.
Provide mechanism for positive identification of piping materials of construction (e.g., material with no follow-up certifications).	Rely on materials arriving as specified.

many major accidents. These accidents are of the type that produce major spills; these are especially prohibitive events when the chemicals are toxic to personnel or the environment. An important design responsibility is to prevent inadvertent backflow; for example, (1) backflow of a catalyzed reactant into a monomer tank, (2) backflow of a burning gas from an incinerator into a header of flammable gas, (3) backflow of toxic reactor contents into a potable water line, (4) backflow of toxic gases into inert gas lines and subsequently into another system, (5) backflow of a fluid in reverse flow through a centrifugal pump, which can rotate the impeller off its shaft and possibly shatter the pump, and (6) backflow around a positive-displacement pump recycle loop, possibly transferring a reactor fluid into a monomer tank.

Although flow indicators seem to be a reasonable solution, most flow indicators are not reliable at low flows, and they may give a low positive-flow indication when there is actually a backflow situation. A differential pressure sensor is a more reliable method for monitoring flow (Fig. 4). Differential pressure indicators together with additional redundant controls are the recommended route.

Another common system for backflow control is a double-block and bleed system (Fig. 5). This type of system is often used in monomer feed lines to reactors. As indicated, under no-flow conditions, the block valves (V-1 and V-2) are closed and the bleed valve (V-3) is opened. Under this circumstance, if the

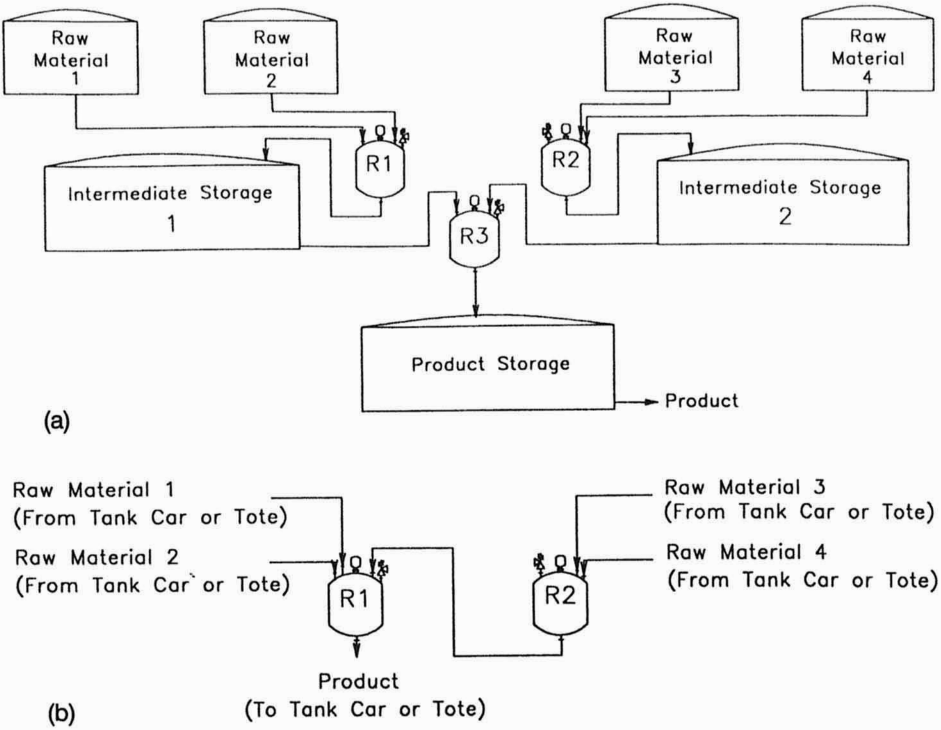

Figure 1 Concept of keeping it small. (a) Do not use large vessels large lines, and many vessels. (b) Use small vessels, small lines, and small tanks.

reactor valve (V-2) is leaking, then the leaking fluid is collected safely in a special collection vessel.

Two disadvantages of this system are (1) the collection vessel needs to be emptied periodically, and (2) the contents of the collection vessel may react exothermally and develop into a hazardous runaway reaction. These disadvantages may be overcome by additional controls and manual attention. If the monomer is toxic, however, this manual operation may be hazardous.

One technique that is used to eliminate this waste monomer collection vessel is to use a nitrogen purge gas to keep a positive pressure on the inside of the blocked section. This prevents inadvertent backflow as illustrated in Fig. 6. Here, a differential pressure alarm system sounds an alarm if the bleed pressure is lower than the reactor pressure. Nitrogen in this process is forced into the reactor and into the monomer vessel, and cross-contamination from the reactor to the monomer vessel is impossible.

Piping systems to prevent backflow through or around pumps are shown in Figs. 7 and 8. Minor modifications to these designs are sometimes made to re-

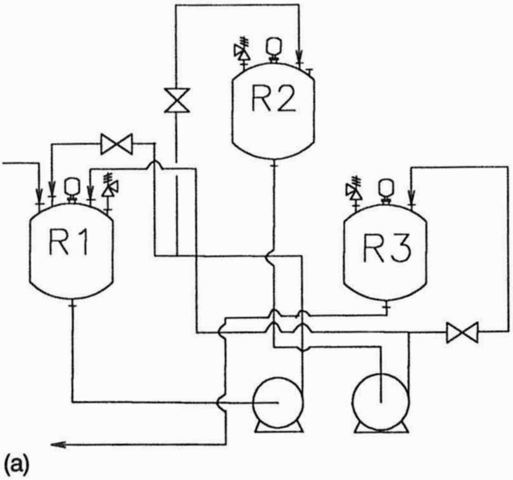

(a)

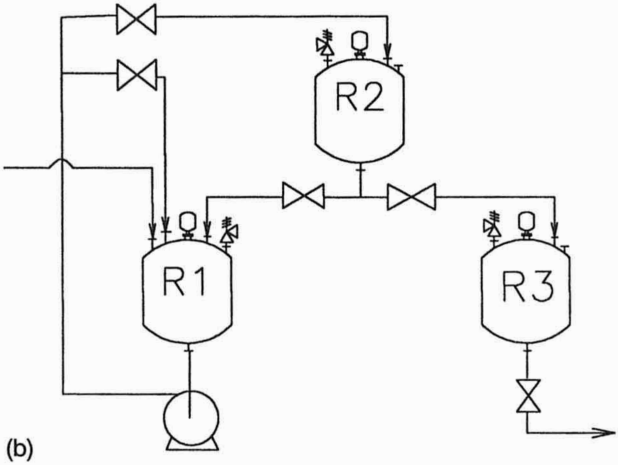

(b)

Figure 2 Concept of keeping it simple. (a) Do not design and install complex systems. (b) Design and install simple systems.

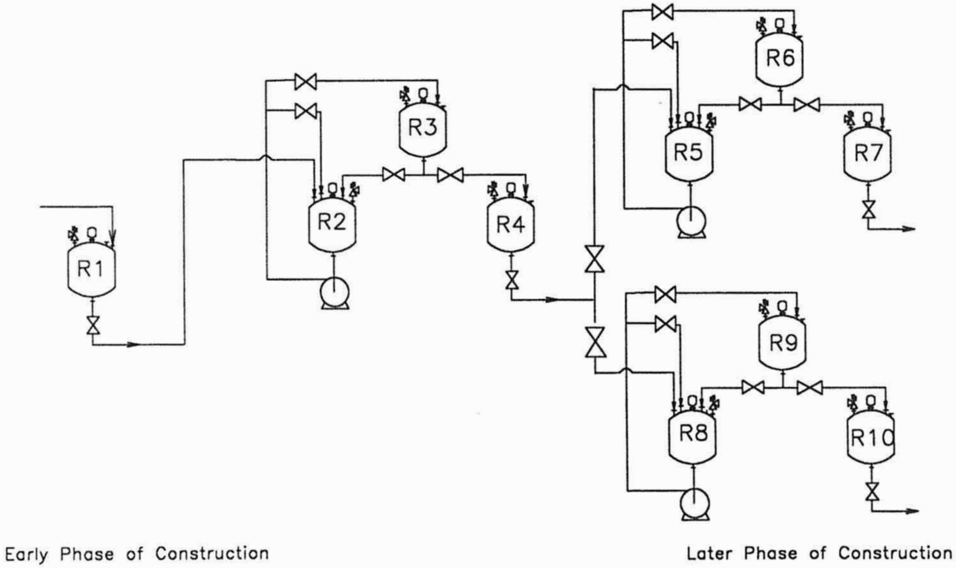

Figure 3 Change it early.

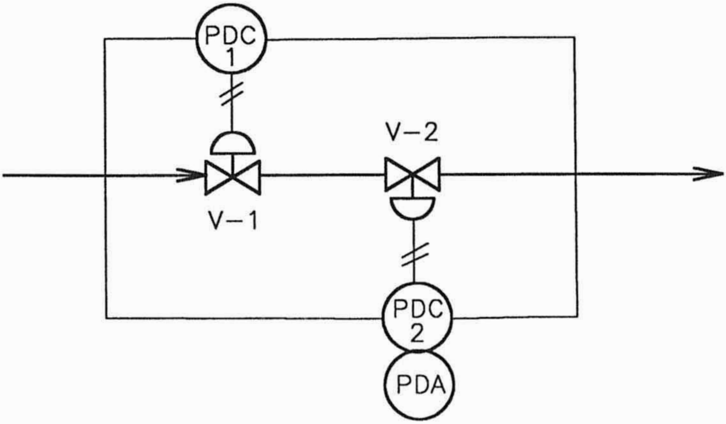

Figure 4 Backflow control: PDC-1 throttles valve as pressure drop decreases and shuts valve full off at some positive low value. PDC-2 and DPA checks pressure drop, and if it is less than a low critical value then V-2 is closed and the alarm is actuated.

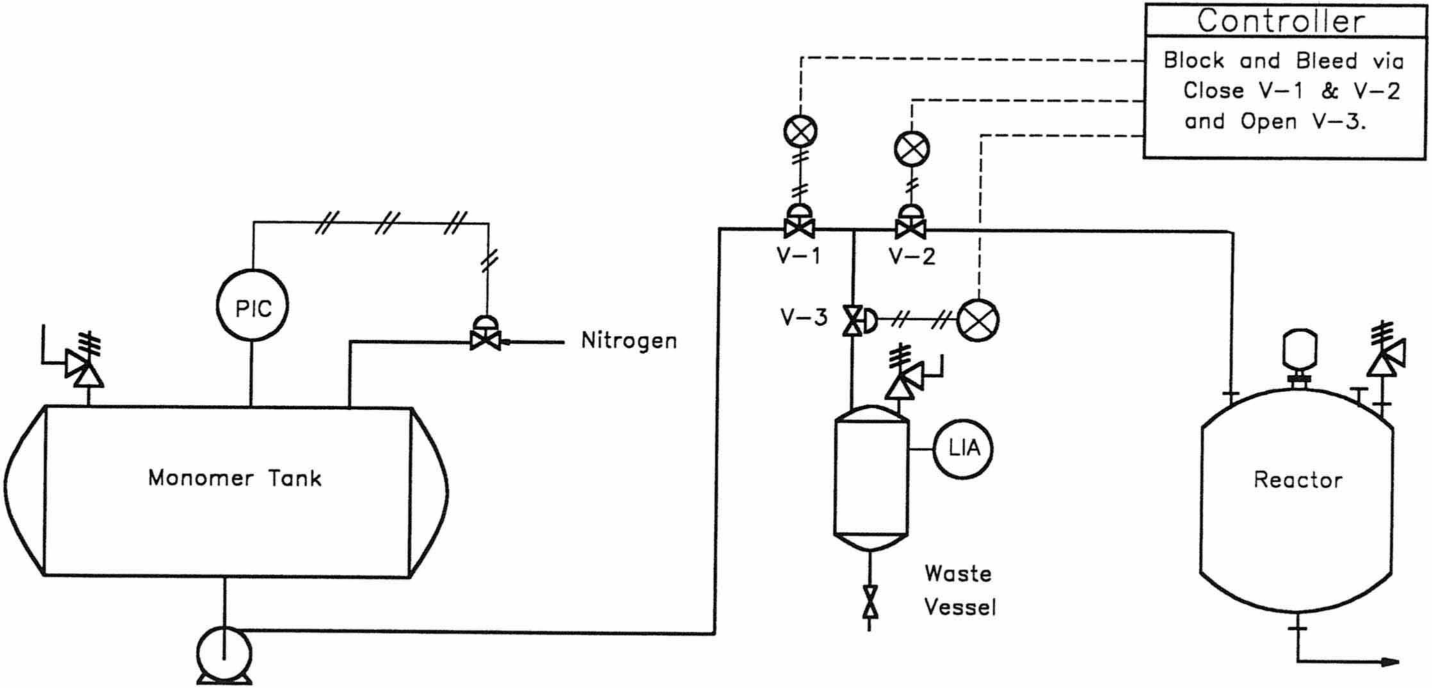

Figure 5 Double-block and bleed with waste vessel.

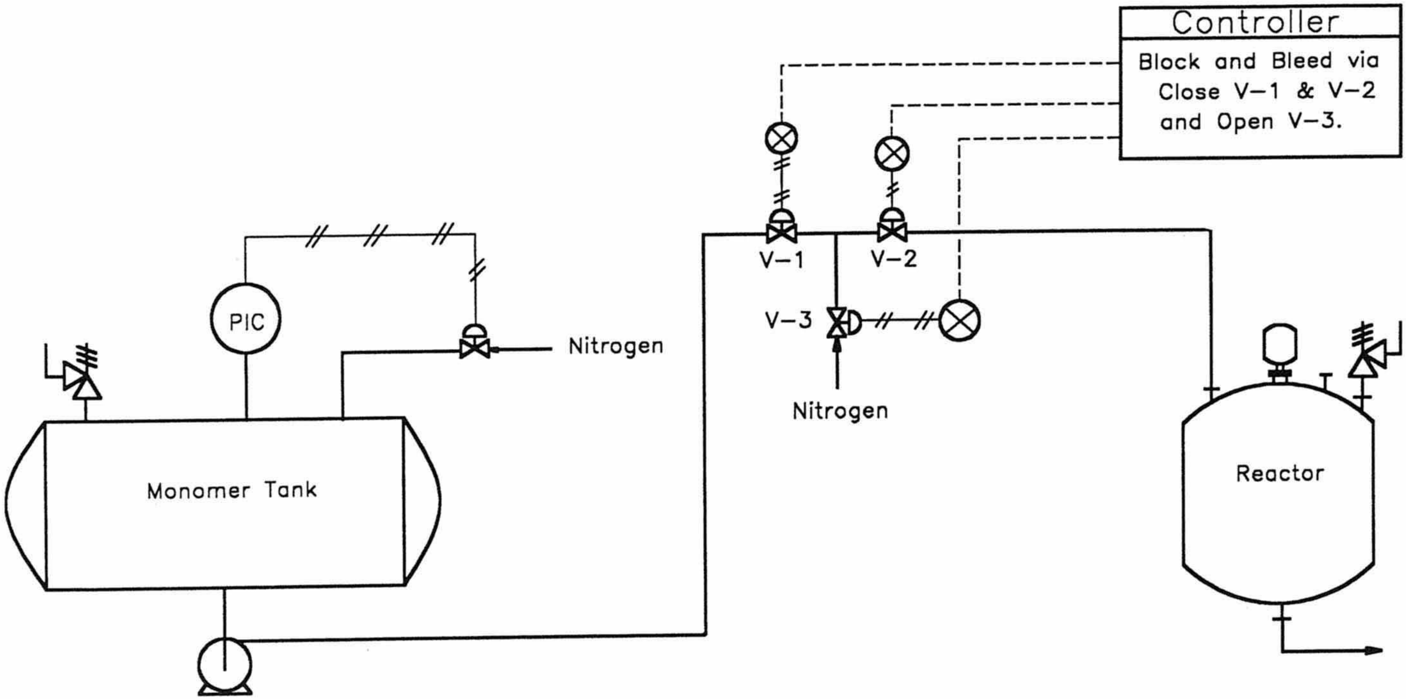

Figure 6 Double-block and bleed with nitrogen purge.

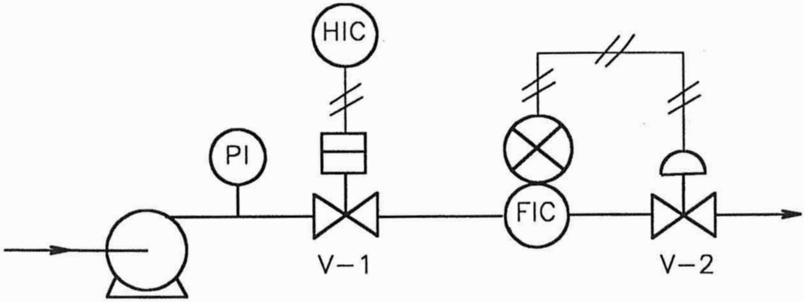

Figure 7 Start-up and backflow protection for centrifugal pump.

duce risks. The alternatives should include redundancy. When redundancy is used, it is a good design practice to use fundamentally different types of indicator and controller hardware. The best design can be chosen based on a quantitative risk assessment, such as fault tree analysis.

6. Welding

Good welding is critical to the integrity of piping systems carrying highly toxic liquids and gas or vapors. A poor weld can result in a joint failure, with subsequent release of fluids that may be dangerous to health.

Butt welds should be used for pipes that transport highly toxic fluids for the following reasons [11]:

a. A butt weld joint does not produce a local stress riser as do some other types of welded joints. A butt weld joint has good fatigue resistance.

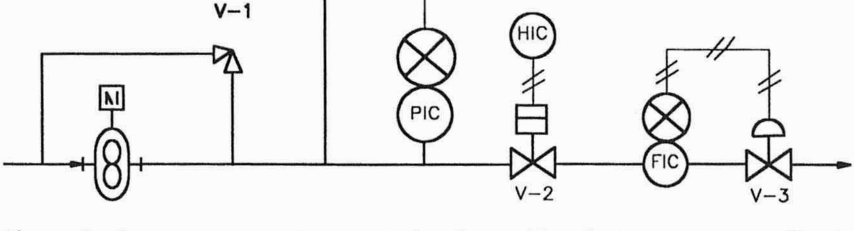

Figure 8 Start-up and backflow protection for positive-displacement pump. To start pump: (1) start pump with V-1 open and V-2 closed; (2) control V-1 to give desired pressure; (3) open V-2; (4) starting with V-3 closed, open to desired flow. To stop pump: (1) open V-1; (2) close V-2 and V-3; (3) stop pump.

b. A butt weld joint can be readily examined by most conventional nondestructive techniques.
c. Butt weld joints should be made without the use of backing rings and inserts, eliminating a crevice that would be detrimental in corrosive, dynamic, or cyclic operations.
d. Field welding of butt joints is simpler than other, more configurated joints (i.e., nozzle welds). This consideration alone can improve the resulting pipeline serviceability in hazardous and toxic service.
e. The resulting profile of the properly produced butt weld lends itself more readily to a uniform distribution of any external loadings, and the uniformity of thickness through the joint reduces or eliminates peak stresses produced by thermal gradients.

Socket weld joints are also used widely for smaller (2 in. and smaller) pipe connections. Although they have performed satisfactorily in demanding service, they have some disadvantages, such as [11]

a. The geometry of the joint produces a crevice where a corrodent may accelerate attack.
b. Socket weld joints are a stress riser, which must be considered in view of external loadings (i.e., thermal) and other loadings that would adversely affect cyclic life of the system.
c. A profile of a completed socket-weld joint illustrates the varying cross-sectional thicknesses of material, leading to a nonuniformity of stress distribution that will intensify peak stresses produced during heating-up and cooldown cycles.
d. Examination of a socket weld joint is limited to visual and surface type examination. The varying cross sections through the joint do not lend themselves to subsurface examination.

Nozzle-type (stub-in) welds should be avoided in hazardous toxic piping systems. When making a branch in a header pipe, the preferred methods are butt weld fittings (i.e., tees), integrally reinforced outlet fittings, or similar fittings that produce a smooth geometric transition between branch and run.

The nozzle weld contains the following disadvantages when used in hazardous and toxic service:

a. The joint geometry produces a very high-stress riser which, in turn, leads to a significant lowering of expected life.
b. Any subsurface nondestructive examination of a nozzle-type weld is difficult owing to joint geometry and varying thicknesses, thereby limiting examination to detection of surface defects only.
c. Field welding of nozzles can be complicated by the need to shape pipe ends and to customize joints. This arduous task can only detract from quality

workmanship, potentially leaving inclusions, fissures, or lack of penetration, all initiators of fatigue failures.

It is recommended that all butt welds and other full-penetration welds should be 100% radiographed. The procedure for radiographing should be in accordance with the ASME Boiler and Unfired Pressure Vessel Code, Section VIII, Division 1.

7. Supports

Proper support of piping is essential to avoid failures caused by various loads. The purpose of pipe supports is to transmit the loads acting on piping systems to buildings or other structures.

Process piping may be subjected to one or more of the following load categories:

a. Dead loads consisting of the weight of piping, piping components, insulation, and fluid contents.
b. Thermal loads caused by
    - Free expansion or contraction of the piping system. This is prevented by restraints or anchors.
    - Difference in expansion characteristics of the piping material.
    - Support, anchor, and terminal movements resulting from the flexibility or thermal expansion of equipment, supports, or anchors.
c. Hydrostatic test loads are loads imposed on a piping system as a result of hydrostatic testing.
d. Miscellaneous loads represented by one or more of the following:
    - Impact forces caused by internal or external conditions, such as changes in flow rate, hydraulic shock, and liquid or solid slugging.
    - Wind-induced forces on exposed piping systems.
    - Earthquake-induced forces.
    - Vibration resulting from impact, pressure pulsation, and resonance in compressors.
    - Forces due to let-down or discharge of fluids.

ASME Code B31.3 stipulates that the piping layout and design of supports should be directed toward preventing the following:

Leakage at joints
Excessive piping sag in piping requiring drainage slope
Unintentional disengagement of piping from its supports
Excessive stresses in the supporting (or restraining) elements
Resonance with imposed or fluid-induced vibrations
Excessive interference with thermal expansion and contraction in piping that is otherwise adequately flexible

Excessive forces and moments on connected equipment
Piping stresses in excess of those permitted by the code

Smith and Van Laan [9] present a thorough discussion of piping loads and support design.

8. Vibration and Erosion

Excessive vibration and erosion can also result in piping failures. Vibration of piping and components can be classified as either steady state or transient. Steady-state vibration can be caused by pressure pulsations from process equipment generating pulsating flow, such as reciprocating compressors and pumps, or valve chattering. Transient vibration can be caused by several phenomena, such as water or steam hammer, slug flow, relief valve thrust forces, to name several. The ASME B31 piping code requires that the piping design eliminate excessive and harmful effects of vibration. Vibrations from reciprocating compressors or pumps can be reduced by the installation of vibration suppressors or snubbers. Casiglia [12] discusses causes of vibration and methods of preventing or reducing them.

Erosion is caused by excessive velocities in pipelines, especially in flashing-flow and slurry systems. The restriction of velocities to a maximum value will minimize erosion. These limiting velocities are usually determined by operating experience. Grossel presents a list of limiting velocities and equations for calculating them in multiphase flow situations [13].

9. Flexible Connections (Hoses and Quick Connectors)

Hoses and quick connectors are often used in batch processing and in drum or tank truck loading and unloading operations. Their proper selection and application are especially important when handling highly toxic fluids. Only metal flexible hoses, with or without elastomeric or plastic liners, should be used. Also, dry disconnect hose couplings should be used for highly toxic liquids to eliminate leaks or drips when uncoupling the hose from equipment or hard piping.

10. Expansion Joints

Expansion joints are used in piping systems to absorb thermal expansion where the use of expansion loops are undesirable or impractical. There are several types of expansion joints used in the chemical industry (i.e., slip, ball, metal bellows, and elastomeric bellows). These are described in the standards of the Expansion Joint Manufacturers Association [14].

Expansion joints are warranted for the following situations:

Where adequate piping flexibility cannot be achieved because of the space limitations.

Where the pipe length has to be limited to minimize the pressure drop to satisfy process requirements.

Where reactions on the connected equipment are excessive and cannot be reduced by conventional means (pipe loops). This is commonly encountered when using equipment with fragile nozzles, such as graphite heat exchangers.
Where mechanical vibrations need to be isolated.
Where design considerations outweigh the disadvantages of the expansion joints (low-pressure, large-diameter piping systems frequently fall into this category).

Expansion joints are highly engineered items and, thus, applications and specification should be developed by a qualified piping engineer–designer familiar with expansion joint system design. The selection and application of an expansion joint in a piping system must be made with a "system approach." The expansion joint should be properly located, with the pipe support system (i.e., anchors, guides, stops, hangers, and supports) as an integral part of this "system."

It should be recognized that expansion joints can fail for a number of reasons, among which are

Damage to the expansion joint during shipping and handling
Damage caused by improper installation and insufficient protection during and after installation
Improper anchoring, guiding, and supporting of the piping system
Anchor failure in service
Excessive bellows deflection (greater than design values)
Mechanical or flow-induced vibrations
Bellows corrosion and erosion
System overpressure
Packing of particulate matter in the bellow convolutions, obstructing proper movement of the bellows

For piping systems handling highly toxic fluids, expansion joints should be used as a last resort for handling thermal expansion. When they must be used, a multiple ply (double-walled) expansion joint should be specified. They have a check hole in the outer wall connected to a toroidal chamber to which a pressure-monitoring instrument can be installed. This pressure instrument can be connected to an alarm that would sound if a leak occurs in the inner wall of the bellows.

E. Valves

1. Introduction

New EPA regulations for handling highly toxic chemicals require leak detection and repair (LDAR) programs. The frequency of the leak detection program increases as a function of the magnitude and number of the leaks. This program may result in large day-to-day operating costs if the number of leaks is relatively high. These fugitive emission regulations have the greatest bearing on valves, because a typical plant has 15–20 times more valves than pumps.

As a result of this problem, higher initial costs for better valves are now justified. On the other hand, buying the most expensive and exotic valves probably will not be justified. The choice of the correct valve type and the correct valve seal is especially important. This section describes the critical features of valve types and valve seals relevant to specifying valves for handling toxic chemicals.

Notice that the current regulations are purposely omitted in this description. The regulations will certainly change; however, the background presented in this section continues to be relevant, even as the number of regulations increase.

2. Valve-Packing Principles

Recent research [15] with valve-packing designs have shown that there are four valve principles that need to be understood for minimizing leakage. Figure 9 illustrates these design principles; the design details depend on the specific application and the specific type of valve.

(*a*) *Antiextrusion rings*. Packing is prevented from extruding out of the packing area by installing rigid antiextrusion rings on both sides of the packing. Since the packing must deform to seal, these rigid antiextrusion rings are added to prevent excessive deformation. This design is needed for polytetrafluoroethylene (PTFE) and graphite packing systems. This antiextrusion ring design needs three features: (1) it must fit closely to the stem but without damaging the stem; (2) it must be rigid to transfer loads; and (3) yet pliable enough to form a seal.

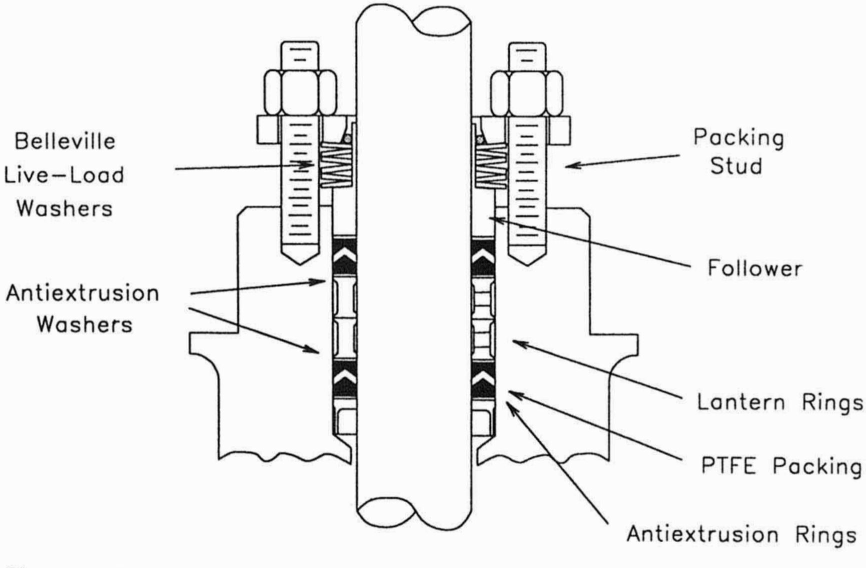

Figure 9 Valve packing for low emissions.

(*b*) *Stem bushings*. Stem bushings are installed near the packing to keep the valve stem aligned. The gradual change in the pliability of the successive seal components keeps the stem aligned; that is, the pliable packing is retained by the antiextrusion ring, which is itself retained by a very hard bushing.

(*c*) *Temperature control*. Excessive temperature increases are controlled by minimizing friction; that is, use only the number of packing layers that gives the appropriate seal. Results have shown that a very limited length of packing is needed to give a good seal.

(*d*) *Proper packing stress*. Live-load springs are used to maintain a constant stress on the packing. These live loads are especially essential for maintaining the correct stress on the packing when low leak rates are needed.

Belleville washers are commonly used as springs for live loads. These washers must be sized and arranged specifically for each packing system. Belleville washers must also be constructed with corrosion-resistant materials because corrosion can affect their strength and constrict their movement.

3. Seals

(*a*) *Polytetrafluoroethylene packing*. Polytetrafluoroethylene (PTFE) is one of the best-packing materials for temperatures up to 450°F. Anti-extrusion rings are made with carbon-filled PTFE. These packings are used for sliding stem valves and rotary stem valves.

A rotary stem valve, however, is easier to seal than a sliding stem valve because (1) rotary valves have less linear travel distance per operation, and (2) dust or other abrasives are not dragged into the seal. These rotary valves need higher stress levels for maintaining good seals.

(*b*) *Graphite packing*. Although PTFE is the preferred packing for most applications, graphite is used when the application exceeds the limits of PTFE, or when fire-safe packing is required. A conventional graphite-packing set contains a flexible graphite packing and braided filament graphite antiextrusion rings.

(*c*) *Bellows seals*. When handling toxic chemicals, valves with bellows-type stem seals provide an important option for plants that need to reduce or eliminate leakage from the valve stems (Fig. 10). Bellows seals [16] are available for rising stem and quarter-turn valves. This type valve has virtually zero leakage.

Bellows can eventually fail because of wear or fatigue. A stem packing can be used as a back-up to prevent external leakage. Monitoring ports can also be installed between the bellows and the packing to detect bellow failures. As shown in Fig. 10, the bellows can be designed with the process fluid inside or outside the bellows. Typically, bellows seals can handle pressures from 250 to 550 psi.

The life of a bellows seal is extended by (1) using high-fatigue–resistant materials, (2) using multiple ply bellows, and (3) reducing the stem travel; that is, reduce the movement. These improvements can extend the valve life as much as ten times.

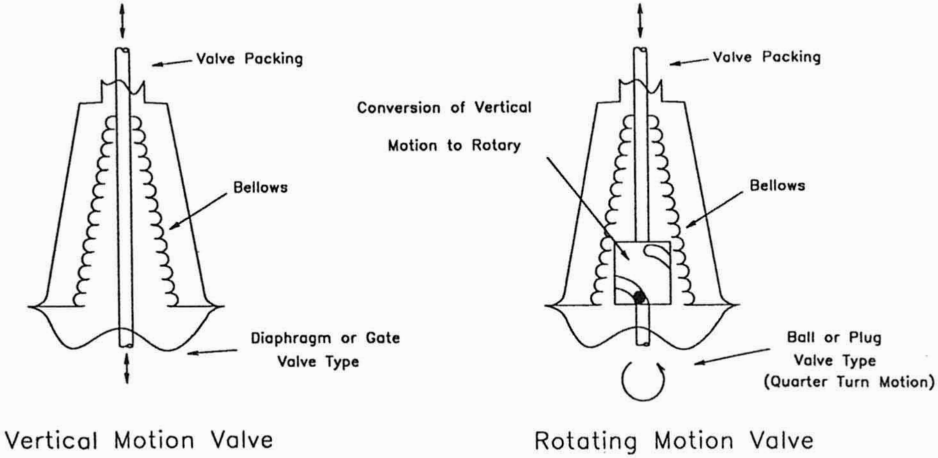

Figure 10 Bellows seal valves.

4. Valve Types

The types of valves that are normally used in toxic services are ball, plug, butterfly, and diaphragm valves (Figs. 11–14). The quarter-turn valves are particularly reliable because they have the lowest linear movement when going from fully open to fully closed; therefore, the seal wear is minimized. Each of these valves can be designed with double-stem seals and leak-monitoring ports. Ball valves are designed as reduced-port or full-port types. Reduced-port ball valves are usually

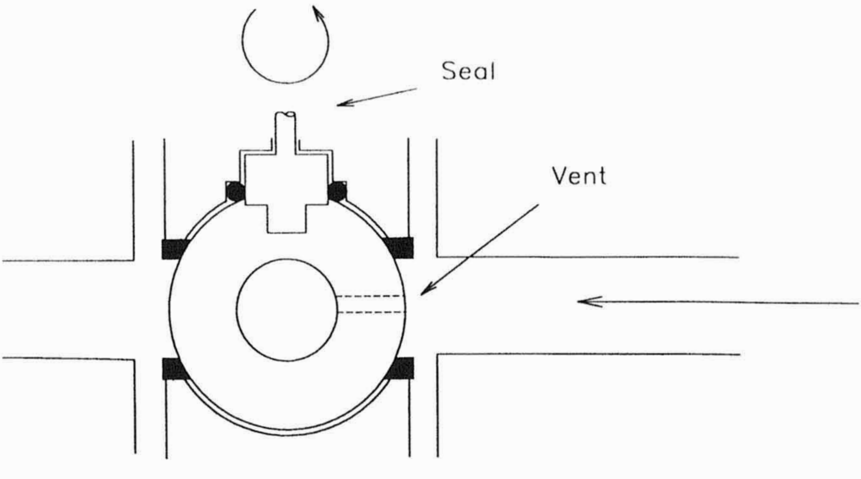

Figure 11 Ball valve.

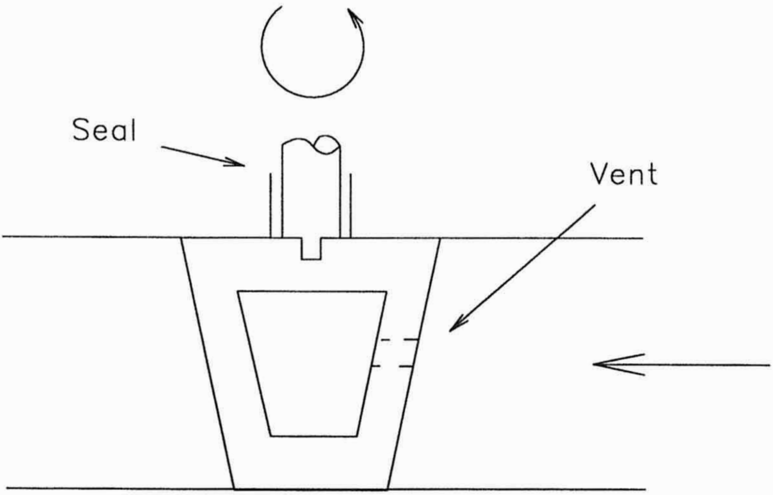

Figure 12 Plug valve.

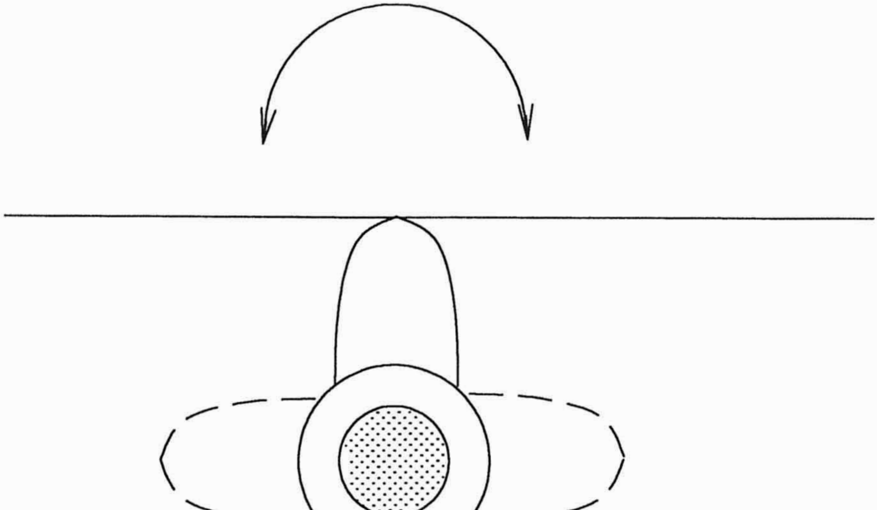

Figure 13 Butterfly valve.

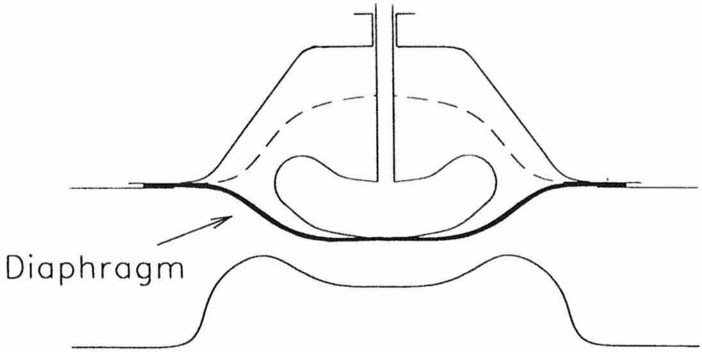

Figure 14 Diaphragm valve.

specified because they are less expensive. Full-port valves, however, are used when the available pressure drop is low, or when slurries are being transported. As illustrated in Fig. 11, the plug and ball valves can be designed with an internal relief for the captured fluid in the fully closed position. This is particularly important when handling a liquid with a high thermal expansion coefficient or a chemical that may decompose (producing a gas) as a function of time or as the temperature is increased.

5. Fire-Safe Valves

A fire-safe valve [17,18] uses dual-sealing to contain the valve leakage before, during, and after fires. As illustrated in Fig. 15, the primary seat is made of a soft plastic material, and the secondary seat is usually stainless or Inconel. Under fire conditions the primary seat fails, and the secondary seat then provides the necessary seating. Stem packing and the body joints are usually asbestos or graphite. These materials withstand temperatures up to 1400°F.

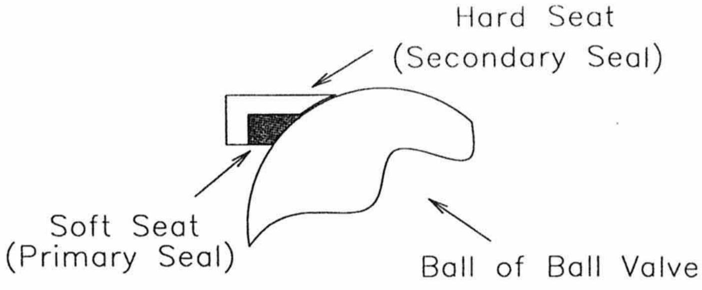

Figure 15 Fire-safe seal assembly.

As a result of the close mechanical tolerances and the nonlubricating gaskets, these fire-safe valves operate with torques 1.5–2 times greater than non–fire-safe valves. These valves, therefore, are placed only in special positions within the plant to control the fire and the releases.

Recommendations relevant to the application of fire-safe valves include (1) only use fire-safe valves where fire protection is absolutely necessary; (2) if a fire-safe valve is used, it will leak 500 cm^3/min/in. or more of valve size during and after a fire; (3) to prolong seal life, limit the use of fire-safe valves to applications for which frequent cycling is not required, and (4) install fire-safe valves in series with regular valves.

F. Leak Tests and Repairs

1. General

Leak tests and repairs are an important and necessary part of a plant's commissioning and maintenance program. Regardless of the skill and motivation of the construction teams, it is inevitable that leaks will exist because of leaking tubing fittings, leaking flanges, leaking valve bonnets, leaking vessels gaskets, and so on. This section covers some of the commonly used methods for detecting and repairing leaks.

2. Soap Solution Method

Soap solution is a commonly used method that is always reliable; however, occasionally, it may be tedious and time-consuming. This method includes the following steps: (1) close all the valves to and from a vessel; (2) add air or nitrogen to the vessel until the pressure is 90% of the maximum allowable working pressure; (3) shut the inlet gas line off and monitor the pressure; (4) a decrease in pressure indicates leakage; (5) wrap all flanges, flange bolts and nuts, and valve bonnets with masking tape; (6) poke a small hole in the tape with a nail or pencil; and (7) brush a soap solution onto all of the holes. Bubbles will indicate a leak that requires repair (see Sec. I.F.7).

After the leaks around the vessel are identified and repaired, then a single line between this vessel and the next vessel is leak tested, and the leaks are sequentially repaired. The leaks that are close to the original vessel are repaired first. This process is repeated for every line around the first vessel, and the process is repeated for all vessels (or pieces of equipment). The process should be systematic and the results should be recorded in a "leak test" maintenance record. A summary of results should also be given to the project manager, who should monitor the performance of the construction teams or the leak performance of the purchased equipment.

3. Ultrasonic Leak Detector

The ultrasonic leak detection [19] method uses the same masking tape method just described, except an ultrasonic leak detector (ULD) microphone is used instead of soap. Leaks are spotted by placing the microphone near the masking tape holes. The ULD can also be used to detect leaks at tubing fittings; for example, instrument air.

4. Thermal Conductivity Method

A thermal conductivity method [20] can also be used similarly to the foregoing two methods. This method has been used to detect relatively small leaks (1.5×10^{-2} μl/s).

5. Gas Analysis Methods

Various gas analysis methods [20] can be used successfully to identify leaks. These methods are sensitive down to the parts per billion (ppb) range; therefore, leaks may be detected without adding masking tape to the flanges. These gas analysis methods include infrared (IR), ultraviolet (UV), mass spectrometry, and gas chromatography. Specific manufacturers are listed in Table 4.

6. Ball Valve Leak Detection

Vapor leaks through ball valves [21] may develop as a result of seal wear or mechanical damage. In plants that handle highly toxic vapors, it may be desirable to monitor the mechanical integrity of valves continuously. A vibration analysis technique was successfully developed to identify leaks in ball valves seals (1- to 3-in. valves). A leak rate of 2.5 L/min can be detected on a 1-in. ball valve with a pressure drop of 3 bar across the valve, and a leak rate of 1.5 L/min can be detected at 6 bar.

A characteristic frequency fingerprint is developed because the flow of gas through the leak produces a shock wave that travels across the inside of the pipe. The vibration detector is mounted just downstream from the valve. It is tuned to a certain frequency band that is known to be leak-sensitive. The continuous monitoring may be used to track deterioration of a valve and to develop condition-based maintenance.

7. Flange Repairs

After flange leaks are found before start-up, the bolts are retorqued. If the leak continues then the gasket needs to be replaced, or the flanges may need to be repaired [22] or replaced if their faces are damaged.

If a leak is detected while the plant is in operation (1) remove one bolt at a time and clean its threads, (2) add an antisieze lubricant to the threads, (3) replace and retorque, and (4) repeat the process for all bolts. This process usually stops the leak because the clean and lubricated bolts allow the application of a higher effective torque.

If the foregoing retorquing process does not stop the leak, then the leak should be stopped with a sealant. This is accomplished by welding a band (with valves and grease fittings) around the flange, and filling the cavity with an appropriate sealant through the grease fittings. Leaks should be stopped as soon as possible

Table 4 Process Analyzers

IR, FTIR, NIR, UV	Guided Wave
	El Dorado Hills, CA.
	General Analysis Corporation
	South Norwalk, CT
	ABB
	Lewisburg, WV
GC	ABB
	Lewisburg, WV
	Applied Automation
	Barltesville, OK
Mass spec	Extrel
	Pittsburgh, PA
	Perkin-Elmer
	Pomona, CA
Ion mobility	Environmental Technologies Group
	Baltimore, MD
XRF	Asoma
	Austin, TX
	OutoKumpu
	Langhorne, PA
LC	Waters
	Wayland, MA
	Dionex
	Sunnyvale, CA
Thermal conductivity	Maihak
	Orville, OH
Titrator	Tytronics
	Waltham, MA
	Applikon
	Westbury, NY
TOC	Astro
	League City, TX
	Byron
	Raleigh, NC
Colorimeter	Tytronics
	Waltham, CA
	Hach
	Loveland, CP
Paper tape	MDA
	Lincolnshire, IL
	GMD
	Hendersonville, PA
Raman	Raman Technology
	Salt Lake City, UT

because continued leakage can erode larger passages, and the leaks may become uncontrollably large.

The band (3/8-in. thick and 3-in. wide)is formed to fit around the flange. It is cut in half for easy installation. Three holes, couplings, and valves are connected to each half. With the valves open, the bands are clamped around the flanges, with one valve directly over the leak. Place a steam eductor (tee) onto the valve over the leak and place a tailpipe on the tee to exhaust the leakage to a safe area. Then add steam to a valve 180° from the eductor valve. Weld the band unto the flange. After turning the steam and eductor off, place grease fittings into three of the valves. Pump a sealant into the flange cavity with grease guns and the grease fittings. This technique has been used to plug steam leaks in 1500-lb steam lines and numerous other applications.

Another similar method, box seal, includes placing a cylindrical shell around a flange and welding it to the pipe on both sides of the flange. Again, it is necessary to weld half cylinders together, and these cylinders have valves and grease fittings to facilitate the sealing process described in the previous paragraph.

II. INSTRUMENTATION

Instrumentation for processes involving highly toxic liquids and gases or vapors is usually similar to that used in nontoxic processes. However, in this situation, their reliability is critical. The following sections will discuss some important instrumentation considerations.

A. Temperature Instruments

Temperature is one of the most critical operating parameters in a process. Some factors concerning the proper selection and installation of temperature sensors will be discussed.

In systems that are prone to fire or explosions, redundant temperature sensors should be installed using different principles of measurement. For example, in a reactor in which a reaction with a potential for a "runaway" is conducted, two different sensors, such as a thermocouple and an RTD, should be provided.

The location of temperature sensors has an effect on how accurately they indicate the actual process temperature. Incorrect readings may fail to indicate hazardous conditions.

Temperature sensors should be located in process lines and vessels where there is a continuous movement of fluid and not in stagnant pipe or vessel sections. Temperature-sensing elements should normally be installed with a thermowell or protection tube to shield the sensor from the harmful effects of the fluid stream, such as erosion, corrosion, oxidizing or reducing atmospheres, and to allow removal for maintenance. Thermowell stresses resulting from the fluid dynamics must also be considered. When installed at right angles to the fluid flow, vibration fatigue failures can occur above certain flow velocities.

Fractionation tower tray temperature points should be located at the bottom of the tray downcomer, if liquid temperature is of interest, or just below the tray above, if vapor temperature is to be measured. Temperature points for the bottom liquid or overhead vapor should be located in the piping from the bottom or top of the vessel. For packed towers, the temperature sensors should be located to detect temperatures in the bed.

B. Pressure Instruments

Pressure instruments should be located as close as possible to the pressure points of interest, and should be installed in process equipment or piping, whichever is more suitable. They should not be located in piping that can be blocked-in during normal operation.

Several safety and operational recommendations are given in the following discussion.

a. When handling corrosive fluids or slurries, use a diaphragm seal to prevent the measured fluid from entering the chamber of the gauge (if a chemical seal is used, consider the compatibility of fluids).
b. When pulsating operation is encountered, use a dampener or a gauge designed for pulsating service.
c. Prevent process fluid from entering the pressure switch housing by providing a suitable barrier.
d. Prevent vapors from condensing or freezing in the gauge during operation.
e. Locate the sensing tap outside the area of high turbulence (typically ten diameters downstream from a reducing valve) in a pressure step-down system.

C. Flow Instruments

Many types of flow measurement devices are available including orifice plates, rotameters, mass flowmeters, magnetic flowmeters, and others. Most available flow measurement instruments can be used for highly toxic fluids. Orifice plates installed in horizontal lines may plug or give incorrect readings if the liquid, gas, or vapor stream has an impurity in it. This is usually avoided by installing the orifice plate in a vertical line with liquid flow up, or the gas or vapor flow down. Rotameters with glass tubes should not be used for highly toxic fluids; all-metal construction should be specified. Magnetic flowmeters are usually preferred for slurries, provided the liquid is conductive. Nonintrusive types of flowmeters, such as the Doppler-effect or nuclear meters, are placed on the outside surface of the pipe being monitored, and are thus inherently safer. However, they are usually not as accurate as flowmeters installed inside the piping, and they are also more difficult to calibrate. In addition, nonintrusive types may not be applicable with some fluids. The choice of a flowmeter to be used for a particular application will depend on various factors, such as the fluid being measured, the flow range, the pressure drop, the accuracy required, and safety.

D. Level Instruments

Level indication can be accomplished by a variety of different types of instruments, including displaced/float types, differential pressure gauges, gas bubblers, level glasses, and noncontact types, such as ultrasonic, microwave, and fiber optic instruments. Differential pressure gauges will not work too well in vessels where the specific gravity of the stored liquid varies appreciably and should not be used in such application. Also, standard level glasses should not be used on vessels containing highly toxic liquids, as they are fragile and could break. Armored or high-pressure level glasses should be used.

Vessels into which highly toxic liquids are pumped from a remote location should be provided with overfill protection, such as a high-level switch that closes an open–shut valve in the filling line.

Redundant level indication should be considered on any vessel containing highly toxic liquids.

E. Toxic Gas Monitors

1. General

The quick detection of undesired emissions from equipment storing or handling highly toxic fluids is essential for initiating prompt mitigating countermeasures. This is accomplished by fixed continuous detection systems that are usually installed at key locations throughout a plant, and are linked to monitoring and control instrumentation. There are basically two ways toxic gases can reach a continuous sensor: either a diffusion-type sensor that is installed in the area where a toxic gas could be emitted, or the gas is drawn to a remote-sampling sensor from areas where it is either undesirable or infeasible to place a sensor.

Six different types of toxic sensors are available: electrochemical sensors, photoionization detectors, flame ionization detectors, nondisperse infrared analyzers, infrared photoacoustic absorption sensors, and thermal conductivity sensors. Blatnica and Schmitt describe these various types of toxic gas detectors, as well as other aspects of their operation and installation [23]. Table 5 presents a comparison of sensor capabilities [23].

Several important considerations are as follows:

- The sensor should be capable of in-place calibration using actual or synthetic samples.
- The sensor must meet all electrical and safety requirements.
- The location of the sensor shall provide necessary protection for weather, dust accumulation, extremes of temperature and humidity, and excessive vibration.

Table 5 Sensor Capabilities Comparison

Sensor/analyze type	Typical types of gas monitors	Typical concentatration for gases	Relative accuracy	Relative cost per point
Electrochemical	Cl_2,NO_2,SO_2, H_2S,HCN, HCl, CO, O_2	0–10 ppm 0–25 ppm 0–50 ppm 0–100 ppm 0–500ppm 0–25%	±10%	Low to medium
Nondispersive infrared	Any infrared absorbing gas Typical applications are:		±1% depending on the device	Medium to high
	CO_2	0–10 ppm		
	CO	0–100 ppm		
	NO_2	0–1000 ppm		
	NH_4	0–2500 ppm		
	CHCs, HCFCs, HFCs	0–3000 ppm		
Photoaccoustic infrared	CHCs, HCFCs, HFCs, NH_4, CO_2	0–1000 ppm 0–0.2%	±1%	Low to medium
Solid state	Hydrocarbons CFCs, HCFCs, HFCs	50–10,000 ppm 50–300 ppm 50–300 ppm	±5%	Low
Photo ionization	Various, based on ionization potential	0.1–2000 ppm	±1%	Medium to high
Flame ionization	Any hydrocarbon or total carbon	0–100 ppm or 0–100%	±1%	Medium to high
Thermal conductivity	H_2	0–100% LEL	±2%	Low to medium
	H_2/N_2 ratio	50–100% H_2 in N_2		
	H_2 in CO, CO_2, N_2	0–10% H_2 in CO, CO_2, or N_2		
	Impurities in He, H_2, N_2	0–10%		
Gas chromatograph	Various	0.01–1000 ppm	±0.5%	Medium to high

- The sensor should be located so that maintenance and calibration are easy to accomplish.
- The sensor should have at least one set of contacts for activating an alarm system.
- The alarm setpoint(s) should be field adjustable and operable over 10–90% of the sensor's full-scale range.
- The alarm system should provide, at a minimum, an audible and visible indicator in the control room. If the detection system is sampling multiple points, the alarm system should indicate which sample point produced the alarm condition.

2. Emission Monitors

Emission monitors are especially useful when handling highly toxic chemicals [24]. Continuous analyzers can be used to monitor leaks from vents, combustion stacks, and process equipment. Results are used so that (1) minor leaks can be isolated and contained, and (2) appropriate process changes can be made to prevent larger and more hazardous releases.

Infrared (IR) and ultraviolet (UV) spectroscopy, mass spectrometry, and gas chromatography methods are used to measure fugitive emissions; some manufactures are listed in Table 6. These are used to measure ammonia, hydrogen sulfide, nitrogen oxides, sulfur oxides, phosgene, and other toxic gases down to part per billion (ppb) levels.

Fenceline systems (IR and UV) can be used to track emissions from thousands of point sources (pumps, valves, and so on). Argonne National Laboratory used Fourier transform infrared (FTIR) methods to measure ten pollutants simultaneously in the ppm and ppb range.

An MDA Scientific technique uses photocells and special impregnated tapes to measure 40–50 specific compounds, including chlorine, hydrogen, sulfide, phosgene, ammonia, and arsine. These photocell analyzers are point-source devices that complement the results from area monitors; they may be used to pinpoint the actual source of a leak.

3. Sample Systems

As mentioned previously, process analyzers are especially important when handling toxic chemicals, but only if they work. The performance of a system is especially dependent on the design of the sampling system; the following paragraphs illustrate the critical features of these systems. A list of analyzer types and manufacturers is given in Table 4.

Near infrared (NIR) analysis is particularly useful for toxic chemicals (Fig. 16). In this example, the analyzer probe is placed directly into the material being analyzed, and the infrared radiation is transmitted to and from the analyzer using fiber optics. The advantages of this NIR system include (1) no-sample conditioning, (2) the system is intrinsically safe, (3) the analysis is rapid, and (4) the NIR

Table 6 Manufacturers of Fenceline Monitors

ABB Environmental
Portland, MA
Altech Systems Corp.
Moorpark, CA
Ametek Process and Analytical Div.
Newark, DL
Extel Corp.
Pittsburgh, PA
GMD
Hendersonville, PA
The Foxboro Co.
East Bridgewater, MA
KVB Analect, Inc.
Irvine, CA
MDA Scientific, Inc.
Lincolnshire, IL
Nicolet Instrument Corp.
Madison, WI
Radian Corp.
Austin, TX
Rosemount Analytical, Inc.
Orriville, OH

instrument can be an analytical grade, with the reliability of a laboratory instrument and with no in-process design constraints.

A gas stream analyzer system is shown in Fig. 17. This is a specially designed system to handle highly toxic chemicals. The system is monitored and controlled using a dedicated personal computer. As illustrated, (1) the fast loop brings rep-

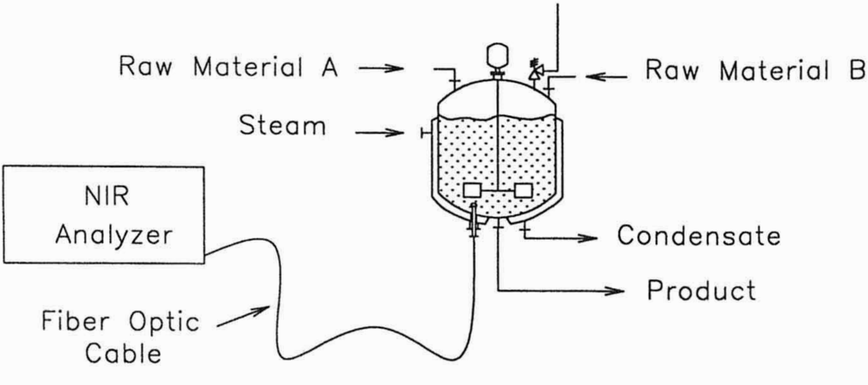

Figure 16 Near infrared (NIR) analyzer system.

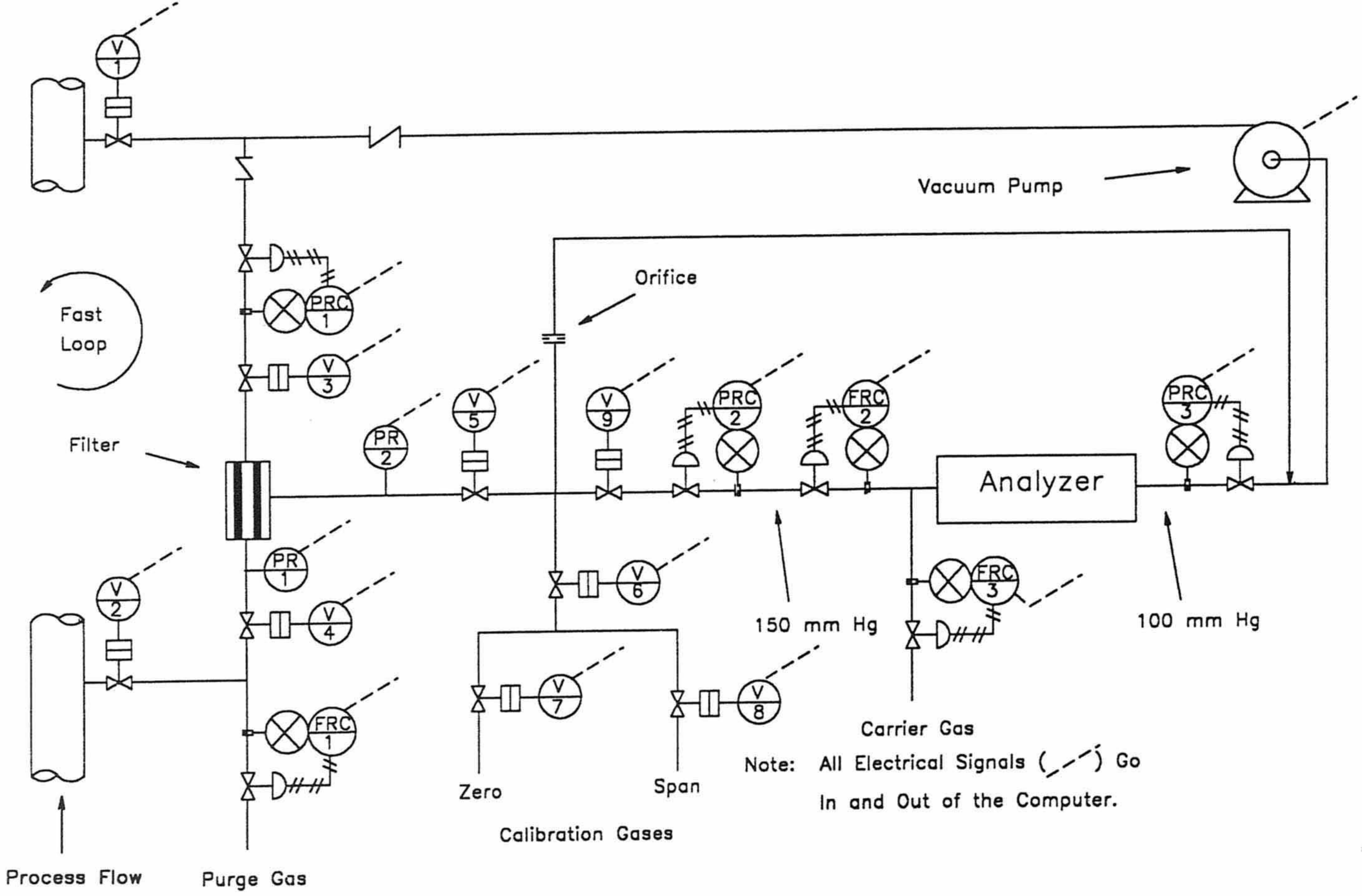

Figure 17 Gas sample conditioning and analyses.

resentative samples to the region of the analyzer; (2) a purge system is provided to flush the filter and all the lines of the system; (3) pressures are regulated to fit the analyzer specifications; (4) pressures are monitored with trend analyses to schedule flushing and maintenance, for example, change the filter; and (5) calibration checks are made periodically to establish baseline drift and to check the analyzer performance, which can subsequently be used to schedule maintenance.

When a liquid sample needs to be vaporized before analysis, then a system, as shown in Fig. 18, is used. Purging, calibration, and monitoring features are also included in this system. A pure liquid analyzer system is illustrated in Fig. 19.

These basic system designs are usually modified to meet the special requirements of a particular analyzer or the unique quality of a feed stream. When systems are used in highly toxic service, they should be tested, modified as required, and demonstrated in an environmentally controlled pilot plant. Pilot plant testing is also needed to establish the best operating conditions, the best control strategy, and to establish the maintenance requirements.

III. DESIGN FOR SAMPLING

A. General

This section covers on-line and off-line analyzers and sampling systems. Continuous on-line and intermittent off-line analyses are being used more frequently [25]. This will certainly increase as governmental regulations continue to reduce the permissible levels in gas and liquid effluents. In addition to these environmental constraints, there are other reasons for the increased need for reliable analyses; for example, personnel safety, plant safety, improved process yields, and higher product quality.

The motivation to use process analyzers is even greater when handling toxic chemicals. When processing toxics the vessels are usually small to minimize the consequences of a catastrophic line or vessel rupture. These lower in-process inventories decrease interstage buffers; therefore, process disturbances quickly affect the entire process performance. Returning a process to standard-operating conditions, under this circumstance, requires rapid and accurate process information. This is possible only with rapid and accurate process (chemical or physical) analyses.

There are a variety of reasons for analyzing process samples: (1) to establish a material balance, (2) to check the operating performance of a specific piece of equipment, (3) to assist in troubleshooting a process problem, (4) to aid in product quality control, and (5) to check the conditions in relation to safety limitations, and (6) to monitor the environment to control effluent concentrations to acceptable levels.

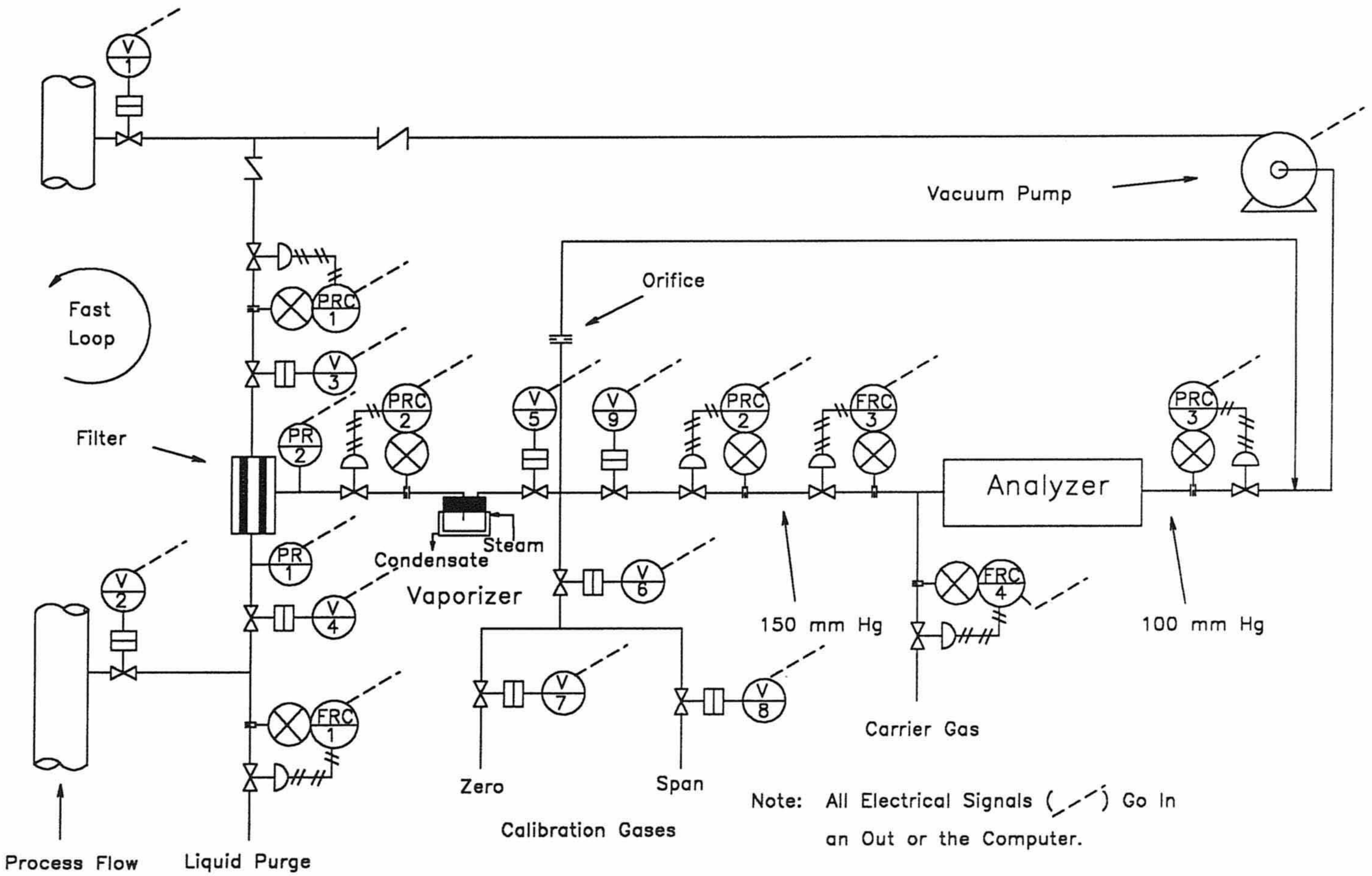

Figure 18 Liquid fast loop and vaporizer system for gas analyzer.

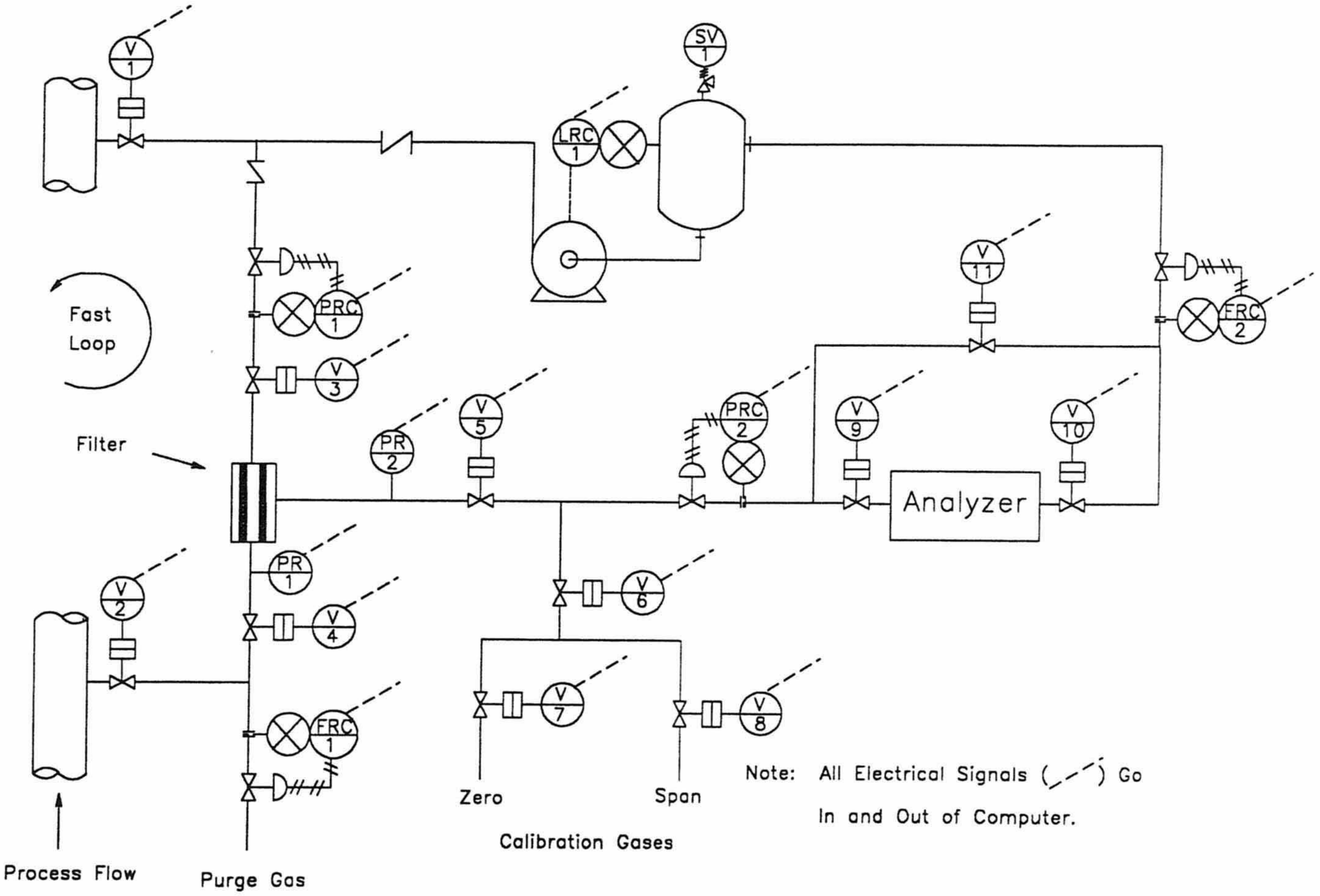

Note: All Electrical Signals (- -) Go In and Out of Computer.

Figure 19 Liquid conditioning system and analyzer.

The successful analyses for this process control is dependent on the quality of the design, installation, and maintenance of reliable sampling systems and sample analyzers. The sampling system is the most important, because the analysis accuracy is limited by the quality of the sample delivered by the sampling train.

B. Sample Hoods

Although on-line methods are preferred, sometimes the complexities of the analyzer or the sampling system make on-line methods impractical. In this situation, manual sampling is necessary.

When manually taking samples of toxic chemicals, personnel must be protected from exposure. Protective clothing may be required; however, the risk of exposure also needs to be reduced by isolating the sample in a ventilated sample hood. This hood must be simple to operate, must provide visual access, and must provide complete protection while taking the sample.

A typical sample hood [26] is shown in Fig. 20. This unit is constructed with corrosion-resistant polypropylene. When using it, the operator stands in front of the window and places the sample container through a protected opening on the side. The back of the hood may contain louvered baffles to facilitate ventilation.

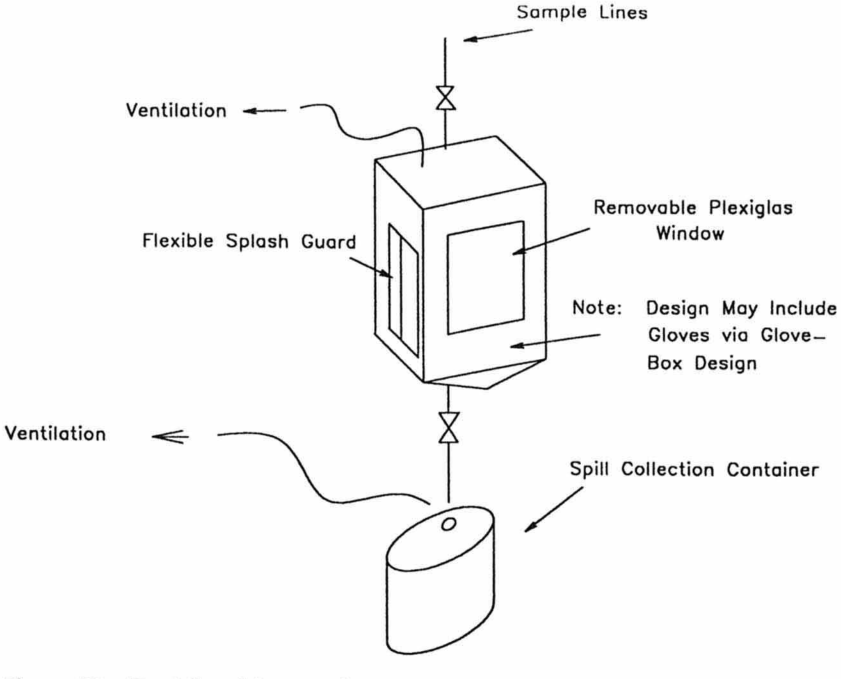

Figure 20 Hood for taking samples.

The ventilation on the bottom nozzle provides the complete containment required for handling toxic chemicals. This relatively simple design can be adapted to the needs of the specific samples. When the sample is highly toxic, for example, the hood may be designed with glove box features.

C. Representative Sampling

A representative sample is one that characterizes the bulk of the material being sampled. In most gas and liquid systems, this is achieved by sampling at a position where there is good mixing. Sometimes turbulence needs to be introduced as illustrated in Fig. 21.

Streams containing solids need samples that represent the entire cross section of the flowing material (Fig. 22). An isokinetic sample is withdrawn to maintain a velocity of flow in the sample tube that is equal to the velocity in the bulk fluid at that specific sample point. This process is necessary to prevent the exclusion or concentration of some specific particle size [27].

On-line sampling and analysis is especially important when handling highly toxic chemicals for three reasons: (1) the sample is taken without operator intervention, (2) the integrity of the process is not disturbed, and (3) the analysis response time is shorter compared with off-line analysis. To achieve these benefits, however, the sample system needs to be designed correctly.

D. Sample Devices

There are two basic groups of on-line samplers: direct and indirect. The indirect sampler is the most desirable when handling toxic agents because of its inherent safety features. The indirect sampler traps and isolates a predetermined and precise volume of material from the process line. This sample is subsequently delivered to an analyzer or to a manually positioned sample container. These samplers are installed directly in the process line or in a bypass line. Three indirect sample devices are shown in Fig. 23. A direct sampling device is connected directly to the source without isolation (Fig. 24). Several companies make automatic

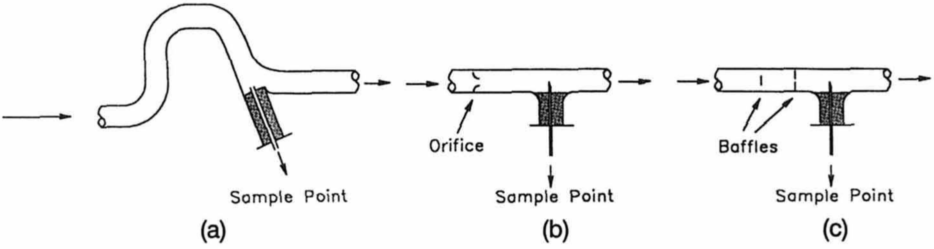

Figure 21 Introducing turbulence in sample systems.

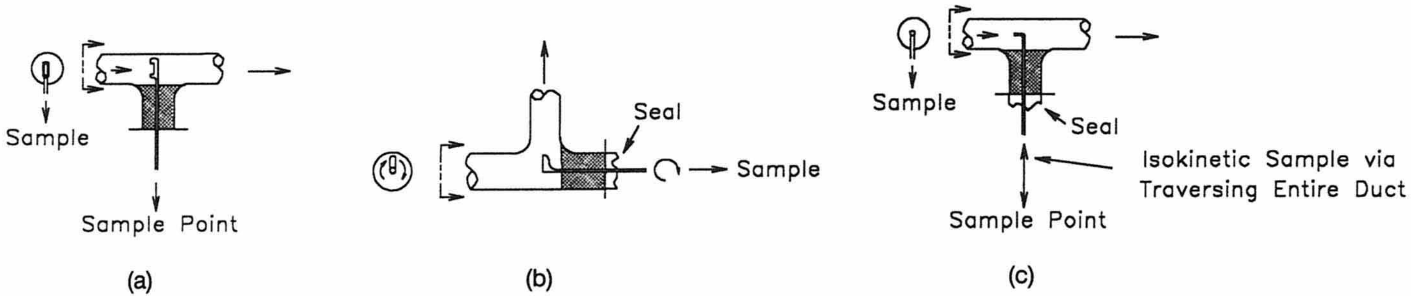

Figure 22 Samplers for gas streams containing particles.

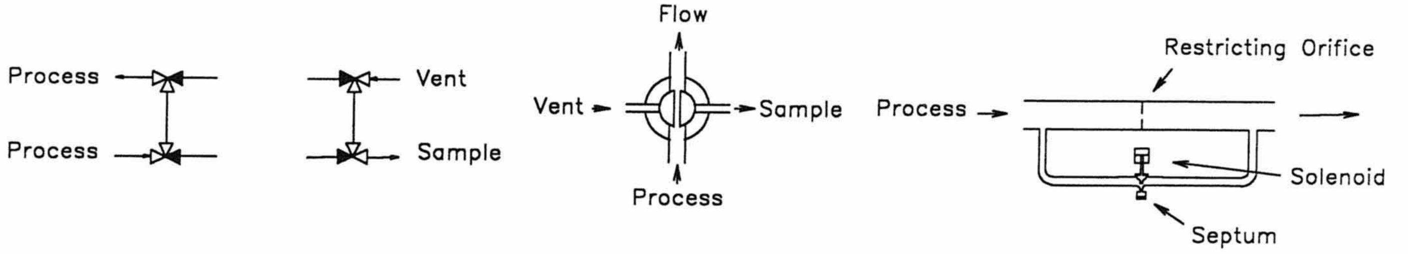

(i) Normal Flow (ii) Sample Flow

(a) Double Three-Port Valve System (b) Plug Valve System (c) Syringe Septum with Isolating Valve

Figure 23 Indirect sample devices.

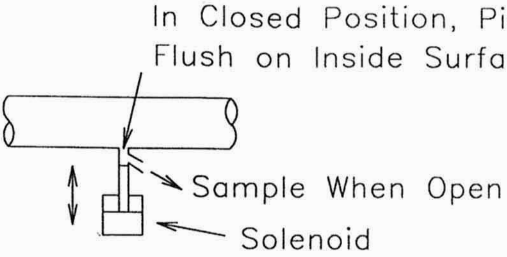

Figure 24 Piston-type direct sample system.

samplers that can be used in processes handling highly toxic liquids, gases, and powders.

E. Sample Conditioning

1. Hydroclones

Sample-conditioning steps are the preanalyzer operations that prepare the sample to meet the specifications of the analyzer. These steps may include changing the phase, temperature, pressure, or altering the overall sample composition; for example, removal of contaminants or harmful constituents.

Typical conditioning operations include (1) cyclones to remove solid particles from liquids or gases, or to remove liquid droplets from gases; (2) coalescers for removing gas bubbles from liquids; (3) water vapor condenser and separator; (4) vaporizer for generating all vapor samples, (5) pressure regulators; (6) pumps; (7) flow controllers, and so forth.

A liquid cyclone is illustrated in Fig. 25. The performance of a liquid cyclone is calculated using the following formula:

$$d_{50} = 8.2\sqrt{\frac{D_c^3 \mu}{Q(\gamma_p - \gamma_L)}} \tag{1}$$

where

d_{50} is the particle size for 50% removal (μm).
D_c is the cyclone diameter (in.).
μ is the liquid viscosity (cp).
Q is the flow rate (gpm).
γ_p is the specific gravity of the solid.
γ_L is the specific gravity of the liquid.

The larger particles give greater removal efficiencies [25], as shown in Table 7.

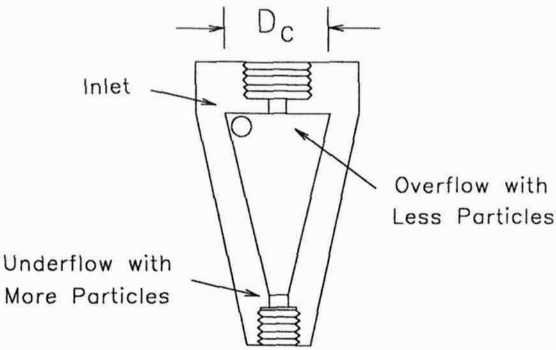

Figure 25 Cyclone for removing solids from liquids.

Some analyzers require pure liquid samples. If gas bubbles create prohibitive interferences, they must be removed. A simple system for removing bubbles from liquids is shown in Fig. 26. Bubbles can sometimes also be removed with pressure.

Condensation is sometimes a problem if the liquid condenses on the analyzer view or cell windows, or if it condenses in a packed column and restricts the flow. In this event, a condenser and separator are added to the conditioning system (Fig. 27).

Gas analyzers, such as infrared spectrometers, are operated most effectively when the gas sample entering the analyzer is a single phase. A liquid or wet gas can be converted to a single gas sample with a vaporizer. As illustrated in Fig. 28, a vaporizer can also contain a filter element for removing solids or to remove entrained condensate. This vaporizer needs to be designed as small as possible to reduce the lag time.

Table 7 Hydroclone Removal Efficiencies for Larger Particles

Particle size (μm)	Removal efficiency[a] (%)
74	$1.5 \times d_{50}$
86	$2.0 \times d_{50}$
93	$2.5 \times d_{50}$
96	$4.0 \times d_{50}$
97	$5.0 \times d_{50}$
98	$6.0 \times d_{50}$
99	$7 \text{ or } 8 \times d_{50}$

[a] d_{50} is the particle size for 50% removal (μm).

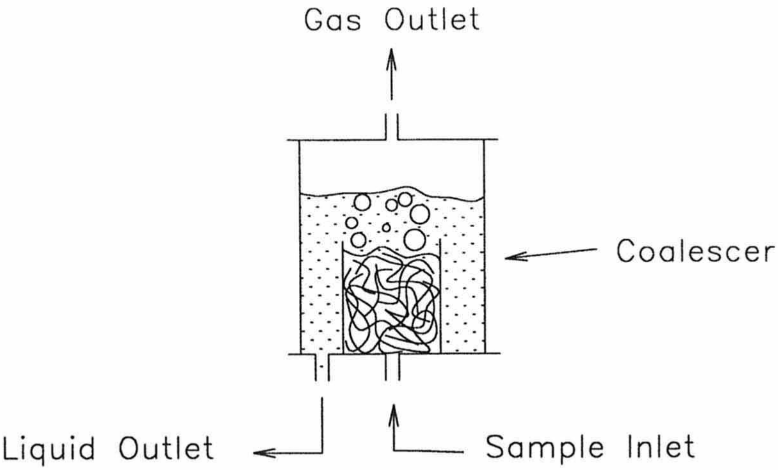

Figure 26 Bubble separation from gas–liquid stream.

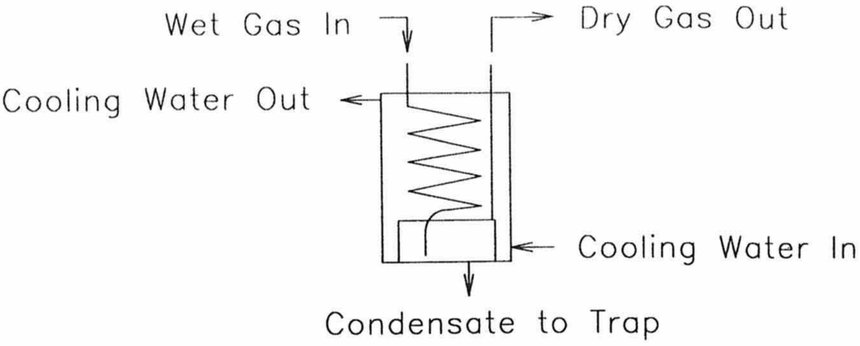

Figure 27 Condenser and separator system for wet gas samples.

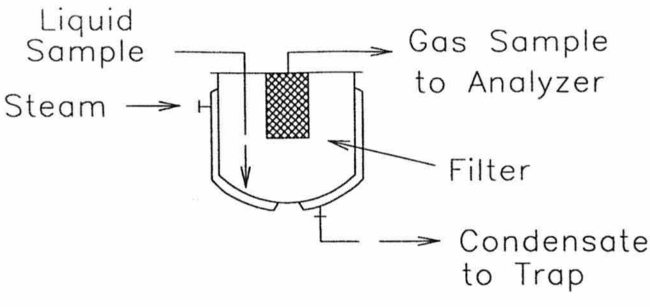

Figure 28 Vaporizer and filter system.

Some equipment manufacturers, for sample conditioning equipment, are given in Table 8.

2. Fast Loop and Filter Systems

Sometimes a sample needs to be transported relatively long distances to an analyzer house or a remote analyzer. Fast loops are used in this type system to reduce the lag times. A simplified schematic of a fast loop system is illustrated in Fig. 29. This particular fast loop contains a self-cleaning bypass filtration system to remove solids from either gases or liquids. Sampling lines should be as small as feasible to minimize lag times. Sampling system manufacturers should be consulted for their recommended sampling line sizes.

Two types of filters are used for sample conditioning, surface and edge types. A surface filter is a cartridge-type filter that collects the solids on its surface and allows the entire sample stream to pass through it. This type of filter is available in very small pore sizes; therefore, it is good for developing high-purity samples. This filter type has one disadvantage when handling highly toxic materials: the filter needs to be changed periodically.

An edge-type filter is preferred for cleaning highly toxic fluids. In this type, a small portion of the stream passes through the filter, and the larger bypass portion continuously flushes the particles off the filter media. This bypass is recycled back to the process. If this system is designed correctly, it operates indefinitely, with no need for maintenance.

Table 8 Equipment for Sample Conditioning and Analysis

Type	Manufacturer
Pipe connectors	Swagelok Cleveland, OH
Sample probes	Clif-Mock Co. Houston, TX Leeds and Northrup Co. North Wales, PA Mine Safety Appliances Co. Pittsburgh, PA
Separators and filters	Beckman Instruments, Inc. Fullerton, CA Collins Products Co. Baytown, TX Halliainen Richmond, CA Millipore Bedford, MA Mine Safety Appliance Co. Pittsburgh, PA

(continued)

Table 8 Continued

Type	Manufacturer
Complete systems	ABB Process Analytics Lewisburg, WV Envirotech Corp. Analyzer Houston, TX Go, Inc. Whittier, CA Horiba Instruments, Inc. Irvine, CA Leads and Northrup Co. North Wales, PA Lear Siegler, Inc. Englewood, CO Lockwood and McLorie, Inc. Horsham, PA Mine Safety Appliances Co. Pittsburgh, PA Pastels Houston,TX Sentry Equipment Corp. Oconomowoc, WI Teledyne Analytical San Gabriel, CA Tex-a-mation Laporte, TX UOP Process Div. Des Plaines, IL Westinghouse Electric Corp. Tempe, AR

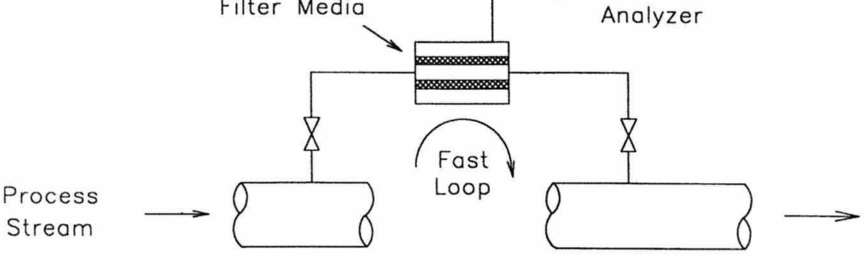

Figure 29 Simplified fast loop system.

REFERENCES

1. American Society of Mechanical Engineers (ASME), *ASME Code B-31, Chemical Plant and Petroleum Refining Piping*, ASME, New York, 1990.
2. S. M. Englund, Design and operate plants for inherent safety—part 2, *Chem. Eng. Prog.* May: 79 (1991).
3. W. W. Russell, Safety in flange joints, *Loss Prevention* (CEP technical manual), Vol. 8, 1974, pp. 100–104.
4. F. Elgendy and W. James, Choosing double contained piping, *Pollut. Eng.*, Oct: 74 (1991).
5. C. G. Ziu, *Double Containment Piping Handbook*, VCH Publishers, New York, 1995.
6. T. Kletz, *Plant Design for Safety—A User Friendly Approach*, Hemisphere Publishing, New York, 1990.
7. T. Kletz, *What Went Wrong? Case Histories of Process Plant Disasters*, Gulf Publishing, Houston, TX, 1985.
8. R. LeVine, *Guidelines for Safe Storage and Handling of High Toxic Hazard Materials*, Center for Chemical Process Safety of the AIChE, New York, 1988.
9. P. R. Smith and T. J. Van Laan, *Piping and Pipe Support Systems*, McGraw-Hill, New York, 1987.
10. S. M. Englund, J. L. Mallory, and D. T. Grinivis, Prevent backflow, *Chem. Eng. Prog.* Feb: 47 (1992).
11. R. C. Getz, Toxic and hazardous systems piping, *Piping Handbook*, 6th ed., (M. L. Nayyar, ed.,), McGraw-Hill, New York, 1992.
12. J. H. Casiglia, Design bases, *Piping Handbook*, 6th ed. (M. L. Nayyar, ed.), McGraw-Hill, New York, 1992, Chap. B2.
13. S. S. Grossel, Piping Systems, *Guidelines for Engineering Design for Process Safety*, Center for Chemical Process Safety, American Institute of Chemical Engineers, New York, 1993, Chap. 6.
14. Expansion Joint Manufacturers Association, *Standards of the Expansion Joint Manufacturers Association, Inc.*, 5th ed., 1985.
15. R. Brestel, Minimize fugitive emissions with a new approach to valve packing, *Chem. Eng. Prog.*, Aug. 1991.
16. B. Grumstrup, Shut out leaks with bellows seal valves, *Chem. Eng. Apr.* 1992.
17. V. Bhasin, How safe are fire-safe valves? *Chem. Processing*, Feb: 24 (1990).
18. M. E. Miles, Valve and piping safety factors, *Hydrocarbon Process.*, Aug: 103 (1991).
19. G. E. Blackmar, Find fluid leaks faster with ultrasonic leak detectors, *Hydrocarbon Process.*, Jan: 73 (1973).
20. V. P. Kazantev, A. J. Zapunnyi, L. S. Feldman, and A. M. Sabadush, An investigation of the possibilities of inspecting for air tightness by gas analysis method, *Defektoskoiya* Nov: 114 (1975).
21. G. Thompson and A. R. Askari, Air leak through ball plug valves by vibration monitoring, *Noise Vibration Control Worldwide* May: 140 (1986).
22. W. Hutton, Repair flange leaks—onstream, *Hydrocarbon Process.*, Jan: 75 (1973).

23. L. J. Blatnica and P. W. Schmitt, Monitoring toxic gases in factory air, *Instrum. Control Syst.*, Aug: 55–58 (1992).
24. S. Shelly, Real-time emissions monitors now detect smaller quantities of more compounds at breakneck speed, *Chem. Eng.*, Nov: 30 (1991).
25. D. D. Cornish, G. Tepson, and M. J. Smurthwaite, *Sampling Systems for Process Design*, Butterworths, London, 1981.
26. B. G. Lovelace, Safe sampling of liquid process streams, *Chem. Eng. Process.*, Nov (1979).
27. E. A. Houser, *Principles of Sample Handling and Sampling Systems Design for Process Analysis*, Instrument Society of America, Philadelphia, 1972.

7

Storage of Toxic Materials

Stanley M. Englund* and Bruce S. Holden
The Dow Chemical Company, Midland, Michigan

I. INTRODUCTION

The storage and handling of toxic materials involve some risks that can be reduced to very low levels by good planning, design, and management practices. Facilities that handle toxic materials typically represent a variety of risks, ranging from small leaks that require prompt attention, to large releases that are extremely rare in well-managed facilities, but have the potential for widespread repercussions [1].

Serious chemical-related accidents are rare, and it is essential that good techniques be developed for identifying significant hazards and mitigating them where necessary. Hazards can be identified and evaluated using approaches such as "what if" analysis, hazard and operability studies (HAZOP), a fire and explosion index, a chemical exposure index, and others.

For complex, high-hazard facilities, quantitative risk assessment (QRA) techniques are being more extensively used to compare relative risks. It has been found that in many cases, a QRA study of a chemical process facility handling hazardous or toxic materials will show that the storage area, not the processing area,

---

This chapter expresses the opinions and recommendations of the authors and should not be construed as representing any other person, company, or entity. While the authors have attempted to ensure the accuracy of the material presented, the responsibility for any use of this material rests solely with those who utilize this material.

*Retired.

has the greater potential for risk to the public [2]. This is because of the much larger amount of material usually found in storage, compared with process areas, although process areas have accidents more often than storage areas. Accidents such as at Bhopal, India, in 1984, where methyl isocyanate escaped from a storage facility, causing many deaths, have left the impression on the general public that storage of toxic materials is extremely dangerous to the public.

It is impossible to eliminate all risk, but much can be done during the planning, siting, design, and operating lifetime of toxic chemical facilities to avoid many chemically related accidents, thus reducing risks to very low levels. Inherently safe design alternatives should be considered [3]. Loss of containment owing to mechanical failure or misoperation is a major cause of chemical process accidents. The design of storage systems should be based on minimizing the likelihood of loss of containment, with the accompanying release of hazardous materials, and on limiting the amount of the release. An effective emergency response program that can reduce the consequences of a release should be available.

In the past, plant designers may have assumed that adequate safety was assured by compliance with applicable codes and standards. Today, those who have responsibility for hazardous material facilities are increasingly aware of the importance of not only the hardware, but the operations, to find potential weaknesses and reduce the risks to employees and neighbors.

A key to safety is a good management system, which includes hiring and training competent staff; having clear and well-designed operating procedures, maintenance procedures, and emergency plans; and assuring that proper procedures are followed.

II. ASSESSMENT OF POTENTIAL RISKS

The storage and handling of toxic materials requires the control of those hazards inherent in the type and amount of material handled and stored. Risks involving these hazards can be reduced to low levels by good planning, design, operation, and management. Risks can range from occasional small leaks that can be promptly detected and repaired, to large releases that, although rare, may have the potential for repercussions over a large area and may affect many people.

It will be helpful to discuss the difference between hazard and risk.

Hazard: Hazard is often confused with risk. *Hazard* is defined as "The inherent potential of a material or activity to harm people, property or the environment." Hazard does not have a probability component. For example, a 1-ton cylinder of chlorine is a hazard because of the toxic properties of chlorine.

Risk: There are differences in the meaning of risk in the published literature that can lead to confusion. *Risk* is defined in this chapter as "A measure of economic loss or injury in terms of both the incident likelihood and magnitude of loss or injury." Risk implies a probability of something occurring that is harmful. For example, the 1-ton cylinder of chlorine just discussed presents a risk for the exposure of people to serious injury, depending on its location; how it is built, installed, and connected; how it is protected; weather conditions; population density, and many other variables.

A. Toxicity and Toxic Hazard

It is important to understand the difference between *toxicity* and *toxic hazard*:

Toxicity is the ability to cause biological injury
Toxicity is a property of all materials, even salt, sugar, and water.
Toxicity is related to dose and degree of hazard associated with a material. Dose is time- and duration-dependent, in that dose equals exposure (concentration) times duration.

Toxic hazards may be caused by chemical means, radiation, and noise. Routes of exposure are

Eye contact
Inhalation
Ingestion
Skin contact
Ears (noise)

An industrial hygiene guide (IHG) is based on exposures for an 8-h day, 40-h week, and is not to be used as a guide in the control of health hazards. It is not to be used as a fine line between safe and dangerous conditions.

A material that has a high toxicity does not necessarily present a severe toxic hazard. For example, 1 ton of lead arsenate spilled in a busy street is unlikely to poison members of the public just a short distance from the spill because it is not mobile. It could be carefully recovered and removed, and it would present a low risk to the general public, even though it is extremely toxic. On the other hand, 1 ton of liquefied chlorine spilled on the same street may become about 11,000 ft^3 of pure gas. The immediately dangerous to life and health (IDLH) level for chlorine is 25 ppm. This is a concentration such that immediate action is required. Thus, the 1 ton of chlorine, if mixed uniformly with air, could create a cloud of considerable concern, having a volume of about 4.4×10^8 ft^3 or a sphere 770 ft in diameter. This could quickly spread over downwind areas and could prove fatal to people near the spill site and cause toxic effects among hundreds of others in the downwind direction.

The situation with the liquefied gas provides far greater risks to people than the spilled highly toxic solid because the gas would spread out and the solid would not.

The chemical exposure index (CEI) developed by The Dow Chemical Company provides a technique for estimating the relative hazard ranking of toxic materials. It is described in *Safe Storage and Handling of High Toxic Hazard Materials* [1]. It includes factors relating to toxicity, quantity volatilized, distance to an area of concern, and physical properties. The ranking uses toxic exposure levels called emergency response planning guidelines—level 2" (ERPG-2). The main value of the CEI is to rank chemical storage facilities or processes in their of hazard to humans.

Measures of inhalation toxicity include ERPG, TLV, TLV-STEL, TLV-TWA, PEL, and IDLH.

ERPG means *emergency response planning guidelines*. It is a system of guidelines prepared by an industry task force. ERPG-2 is the maximum airborne concentration below which, it is believed, nearly all individuals could be exposed for up to 1-h without experiencing or developing irreversible, adverse, or other serious health effects or symptoms that could impair an individual's ability to take protective action.

TLV means *threshold limit value* (established by the American Conference of Government Industrial Hygienists; ACGIH). TLV–C is the concentration in air that should not be exceeded during any part of the working exposure.

TLV-STEL is a 15-min, time-weighted average (TWA) concentration to which workers may be exposed up to four times per day with at least 60 min between successive exposures with no ill effect if the TLV–TWA is not exceeded; developed by the ACGIH.

TLV–TWA is the time-weighted average concentration limit for a normal 8-h day and a 40-h workweek to which nearly all workers may be repeatedly exposed, day after day, without adverse effect; developed by the ACGIH.

PEL means *permissible exposure level*. Similar to TLV, but developed by the National Institute for Occupational Safety and Health (NIOSH).

IDLH means *immediately dangerous to life and health*. This is a concentration at which immediate action is required. The exact effect on an individual depends on the individual's physical condition and susceptibility to the toxic agent involved. It is the maximum airborne contamination concentration from which one could escape within 30 min without any escape-impairing symptoms or irreversible health effects. It was developed by NIOSH.

B. Risk Analysis and Risk Assessment

Risk is defined as the combination of expected frequency and consequence of accidents that could occur as a result of an activity. *Risk analysis* evaluates, for any identified incident, its likelihood and consequence, which result in risk. *Risk assessment* is an extension of risk analysis to include making judgments on the acceptability of the risk. It may be qualitative or quantitative, or it can range from simple, "broad brush" screening studies to detailed risk analyses, studying large numbers of incidents with highly sophisticated frequency and consequence models. Throughout the published literature, the terms risk analysis and risk assessment are often used interchangeably.

1. Qualitative Risk Analysis

Qualitative risk analysis describes the events and risks, but uses qualitative terms, such as small, unlikely, negligible, improbable. It can be performed at a preliminary or detailed depth.

2. Quantitative Risk Analysis

Quantitative risk analysis (QRA) is a complex and controversial issue. This chapter will present a brief introduction to the subject and will not attempt to explore its technology or controversial nature. As a result of many QRA studies, it has been found that the storage of highly hazardous materials often causes more risk to humans, especially outside the property lines of the company involved, than do processes. Therefore, for those who store highly hazardous materials, a knowledge of the capabilities of QRA may be valuable [4,5].

Quantitative risk analysis (QRA) models the events, incidents, consequences, and risks, and produces numerical estimates of some or all of the frequencies, probabilities, consequences, or risks. QRA can be done at a preliminary level, or at a detailed level, and it may or may not always quantify all events, incidents, consequences, or risks [6]. QRA is the art and science of developing and understanding numerical estimates of the risk associated with a facility or operation. It uses highly sophisticated, but approximate, tools for acquiring risk understanding. QRA is a new, evolving technology, still more an art than a science, and it will never make a decision for you. It can only help increase the information base you draw on when making a decision.

Quantitative risk analysis can be used to investigate many types of risks associated with chemical process facilities, such as the risk of economic losses or the risk of exposure of members of the public to toxic vapors. In health and safety applications, QRA is classified into two categories:

a. Estimating the long-term risk to workers or the public from chronic exposure to potentially harmful substances or activities
b. Estimating the risk to workers or the public from episodic events, which may be sudden, involving a one-time exposure to potentially harmful substances or activities

This discussion will focus on the use of QRA in the safety assessment of sudden hazards and episodic events only.

Quantitative risk assessment is fundamentally different from many other chemical engineering activities (e.g., chemistry, heat transfer) the basic property data of which are capable of being theoretically and empirically determined and are often established experimentally. But some of the basic "property data" used to calculate risk estimates are probabilistic variables, with no fixed values. Some of the key elements of risk must be established using these probabilistic variables. QRA is an approach for estimating the risk of chemical operations by this probabilistic approach. It is a fundamentally different approach from those used in many other engineering activities because interpreting the results of QRA requires an increased sensitivity to uncertainties that arise primarily from the probabilistic nature of the data.

Estimating the frequencies and consequences of rare accidents is a synthesis process that provides a basis for understanding risk. With this synthesis process, risk estimates can be developed for hypothetical accidents based on experience with the individual basic events that combine to cause the accident. Complex models are used to couple the basic events together, thus defining the ways the accident can occur.

Quantitative risk analysis is a technique that provides advanced quantitative means to supplement other hazard identification, analysis, assessment, control, and management methods to identify the potential for such incidents and to evaluate control strategies. It identifies those areas for which operation, engineering, or management systems may be modified to reduce risk, and it may identify the most economical way to do it. The primary goal of QRA is that appropriate management actions, based on results from a QRA study, help make facilities handling hazardous chemicals safer. It is one component of an organization's total risk management program. It allows the quantitative analysis of risk alternatives that can be balanced against other considerations; however, it is not widely used because detailed QRA techniques are complex, cost-intensive, and require special resources and trained personnel. The methodology is a sophisticated analytic tool.

Even though the results of QRA are limited by uncertainties in the data, in the understanding of human behavior, and in certain physical phenomena, the exercise itself will sometimes suggest ways to reduce risk. In the nuclear industry, it has been used to suggest the incorporation of "passive" safety features, which rely on gravity or natural convection, rather than "active" features, such as pumps [7].

The underlying basis of QRA is simple in concept. It offers methods to answer the following four questions:

a. What can go wrong?
b. What are the causes?
c. What are the consequences?
d. How likely is it?

It has been said that QRA attempts to answer the question, "Does this plant have the potential to cause another Bhopal incident?" Although the application of QRA may not have prevented the Bhopal incident, it is at least possible that the proper application of QRA may have made this incident extremely unlikely.

(*a*) *Why perform QRA*? The following are common reasons for performing QRA:

a. Because you believe there will be a better understanding of risk that will aid decision making.
b. Because QRA is required by law—so you decide to see what QRA is like. Some countries, such as The Netherlands, require QRA as a prerequisite for industrial expansion. Certain siting decisions, process selection, number of safety systems, and so on, are sometimes prescribed by state government authorities in the United States statutorily committed to the use of QRA.
c. Because in analyzing storage facilities for toxic and hazardous materials, QRA studies have shown that frequently storage facilities contribute the most risk of serious incidents, compared with process and other plant facilities.

There is now governmental involvement in QRA to varying degrees. It is now required, at least to some extent, in The Netherlands, Australia, New Jersey, and California, and may soon be required in other states and countries and possibly to some extent, in the entire United States, depending on how the Clean Air Act bill that has passed Congress is enforced. Given the contemporary technical and social environment, one could argue that it is imperative that management personnel as well as technical personnel understand the strengths and weaknesses of QRA technology.

(*b*) *Consultants*. A large number of consultant firms will do QRA studies. One such firm is DNV Technica, Ltd. DNV Technica has created the computer program, SAFETI, which is used to produce QRA studies. SAFETI is an acronym for suite for the assessment of flammable and explosive toxic impact. This is a rather complex program that combines many smaller programs and requires a lot of input data and a lot of time to use. Other consultants and computer programs are also available. At this writing, several QRA study programs for personal computers are being developed. A partial list of consultants in the area of QRA follows:

Primatech, Inc., Columbus, OH
Arthur D. Little, Inc., Cambridge, MA
DNV Technica Ltd., London UK, Houston, TX, Columbus, OH
JBF Associates, Inc., Knoxville, TN
Battelle Memorial Institute, Columbus, OH
Pickard, Lowe and Garrick, Inc., Newport Beach, CA
Chemetics International Co., Vancouver, B.C.
The Reliability Center, Inc., Hopewell, VA

(*c*) *Methods of showing results of risk studies*. Figures 1 and 2 illustrate two of the more commonly used methods for displaying societal risk results: an *F–N*

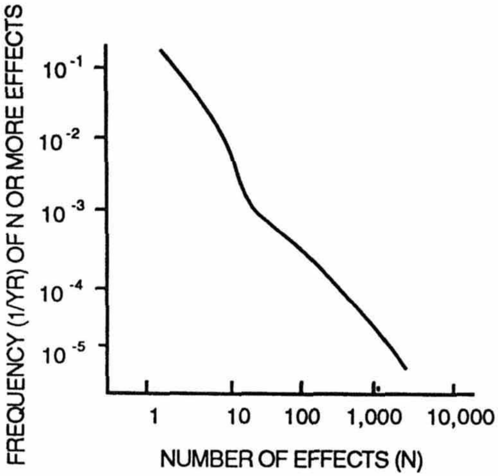

Figure 1 Example of an *F–N* curve. (Courtesy of Technica, Inc.)

curve and a risk profile. The *F–N* curve plots the cumulative frequencies of events causing *N* or more impacts, with the number of impacts (*N*) shown on the horizontal axis. With the *F–N* curve it is easy to see the expected frequency of accidents that could harm greater than a specified number of people. The *F–N* curve is a cumulative illustration.

The risk profile shows the expected frequency of accidents of a particular category or level of consequence. The diagonal line is a line of constant risk, defined such that the product of expected frequency and consequence is a constant

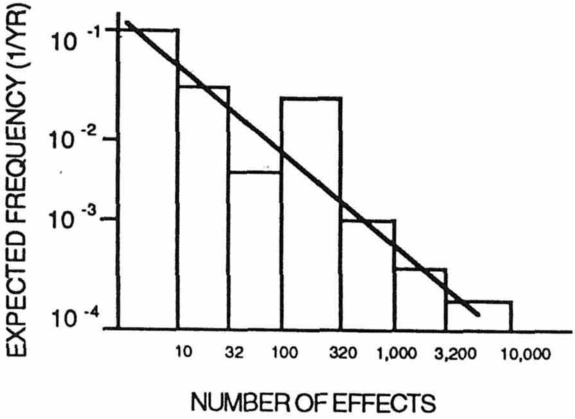

Figure 2 Example of a risk profile. (Courtesy of Technica, Inc.)

at each point along the line. As the consequences of accidents go up, the expected frequency should go down for the risk to remain constant. If a portion of the histogram sticks its head above the line (that is, if a particular type of accident contributes more than its fair share of the risk), then that risk is inconsistent with the risk presented by other accident types.

A method for graphically displaying individual risk results is use of the risk contour, or risk isopleth. If *individual risk* is defined as the likelihood of someone suffering a specified injury or loss, then individual risk can be calculated at particular geographic locations around the vicinity of a facility or operation. If the individual risk is calculated at many points surrounding the facility, then points of equal risk can be connected to create a risk contour map, showing the geographic distribution of the individual risk. Figure 3 shows various contours showing the probability of a particular consequence on an individual located on the contour line.

The standards for individual deaths are sometimes stated to be as follows [2]:

Existing plants: 10^{-5}/yr
New plants: 10^{-6}/yr–10^{-8}/yr

This implies good separation from residential areas. These numbers are arbitrary and should be used with care: *F–N* curves are for societal risks; risk contours are for individual risk.

(*d*) *Absolute versus relative risk estimates.* Absolute risk results are specific numerical estimates of frequencies and consequences of process facility accidents synthesized from accident models and basic input data. Relative risk results show

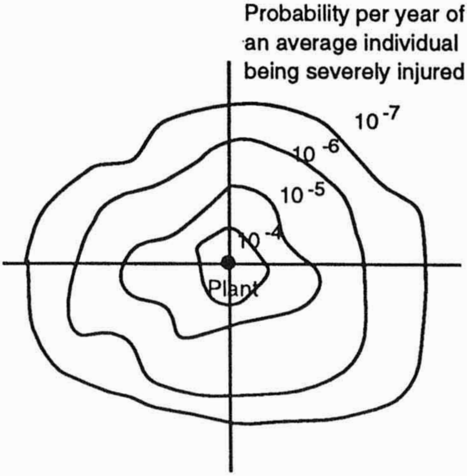

Figure 3 Example of a risk contour. (Courtesy of Technica, Inc.)

only the difference between the levels of safety of one of more cases of interest and a reference, or baseline, case.

The advantage of absolute estimates is the ability to tell the decision-maker when certain safety improvements are no longer justified. If the risk numbers are above the limit, one expends resources until numbers are below the limit. However, life is usually not so simple: the disadvantages of using absolute estimates are (1) you can never be certain about the accuracy of the results; (2) there are no standard criteria for risk acceptance that everyone agrees on for all circumstances; and (3) the numerical estimates are difficult for nonexperts to interpret.

The advantage of using relative risk results is that one can decide on the best way to improve safety of a facility without having to defend the absolute accuracy of the results. Relative results are also much less likely to be misinterpreted by persons unfamiliar with QRA. However, the use of relative risk results could encourage managers to make unnecessary improvements. Decision-makers should use their judgment to make these decisions based on other information, as well as on QRA results. In practice, use of relative results is easier and preferable for many applications.

(*e*) *Cost of doing quantitative risk analysis studies*. Such studies can be expensive, but they can be cost-effective when appropriately preceded by qualitative evaluations and risk-screening methods that reduce the size and complexity of the QRA study.

(*f*) *Reliability of quantitative risk analysis numbers*. The accuracy of numbers produced by QRA studies are subject to question, as it is virtually impossible to prove that the numbers are "right." Technica (1990) [2] claims accuracy of ± 300%. Other experts have claimed QRA accuracy is no better than ± 1000 to ± 3000%. Criticisms of QRA include comments that QRA does not address "people problems" adequately, and that there is a lack of a good database for equipment reliability. However, a case can be made that QRA techniques may be useful for comparisons even if the absolute values may be questionable.

S. B. Gibson has said the following:

> A risk assessment which incorporates accurate models of all the factors in a real world gas release is totally impracticable. So we settle for what is practicable, and that leaves gaps in the models used, in how well the real life behavior is captured by any models, and in the validity of the results predicted by each model. The final figures in a risk assessment rarely quote the confidence or uncertainty bounds, so the reader needs to understand which of the uncertainties apply to those figures since they must be considered in the decision-making process. In the case of an analysis involving nine steps for evaluation, if each step is accurate to ± 25%, the final risk number would range from 0.075 to 7.5, a spread of two orders of magnitude, [8].

C. How Does Risk Assessment Fit in with Hazard Evaluation?

The most logical approach appears to be

a. First apply evaluation procedures to identify which storage, processes, or plants contain chemicals known to be potentially harmful, or equipment or processes known or suspected to be unreliable, or a combination thereof.
b. Then do a risk assessment on only these identified targets for which some type of hazard evaluation has already been done and for which there is concern of potential frequency of a hazard to occur.

III. INHERENTLY SAFER DESIGN

The design of chemical plants to be "inherently safer" has received a great deal of attention [9,10]. This is partly due to the worldwide attention to issues in the chemical industry brought on by the gas release at the Union Carbide Corporation plant in Bhopal, India, in December, 1984. A major contributor in the field of literature concerning inherently safer chemical plants is Trevor Kletz, formerly with Imperial Chemical Industries PLC (ICI, England) [3, 11–13). Kletz is now a visiting Fellow at the Loughborough University of Technology, Loughborough, England.

The term *inherent* means "belonging by nature, or the essential character of something." An *inherently safer* plant is safe by its nature and by the way it is constituted.

A. Critically Review Alternatives Early in Design

Hazards should be considered and eliminated as early in the process development stage as possible. This includes considerations of alternative processes, reduction or elimination of hazardous chemicals, reduction in inventory, site selection, and other factors. By the time the process is developed, the designers of storage areas already have major constraints imposed on them.

Hazards should also be identified and removed or reduced early in the design. Adding protective equipment at the end of the design or after the plant is operating can be expensive and not entirely satisfactory.

B. Siting

The Bhopal plant of Union Carbide was built originally 2.4 km (1.5 miles) from the nearest housing. With time, a residential area grew up next to the plant. This demonstrates the need to prevent hazardous plants from being located close to residential areas and, conversely; to prevent residential areas from being close to hazardous plants [3, 11]. If possible, the cost of a plant should include an adequate buffer zone, unless other means are provided to ensure that the public will not build adjacent to the plant. The nature and size of this buffer zone depends on many factors, including the amount and type of chemicals stored and used.

C. Provide Adequate Spacing of Plants, Tanks, and Roads

When designing a safe storage facility, spacing provided for the process, storage, and unloading and loading of raw materials is most important. Normally, when hazardous materials are involved, tank car- and tank truck-loading facilities should not be close to each other nor close to the process.

Because of the volume usually stored, the potential severity of a gas release accident from the storage of a highly toxic or flammable chemical is far greater than the potential severity of what might occur in the process area or the loading or unloading area.

On the other hand, the frequency of storage accidents is quite low compared with that of loading, unloading, and process accidents. This poses logistics problems, which should be faced early in process layout, on how to maintain adequate distances between these areas.

D. Inventory

The Flixborough disaster [14] occurred on June 1, 1974, and involved a large unconfined vapor cloud explosion (or explosions—there may have been two) and fire that killed 28 people and injured 36 at the plant and many more in the surrounding area. The entire chemical plant was demolished and 1821 houses and 167 shops were damaged.

The results of the Flixborough investigation made it clear that the large inventory of flammable material in the process plant contributed to the scale of the disaster. It was concluded that "limitations of inventory should be taken as specific design objectives in major hazard installations." It should be noted that reduction of inventory may require more frequent and smaller shipments and improved management.

There may be more chances for errors in connecting and reconnecting with small shipments. These possibly "negative" benefits should also be analyzed. Quantitative risk analysis of storage facilities has revealed solutions that may run counter to intuition [15]. For example, contrary to popular opinion, reducing inventories in tanks of hazardous materials does little to reduce risk in situations during which most of the exposure arises from the number and extent of valves, nozzles, and lines connecting the tank. Removing tanks from service altogether, on the other hand, helps.

A large tank may offer greater safety than several small tanks of the same aggregate capacity, because there are fewer associated nozzles and lines. Also, a large tank is inherently more robust, or it can economically be made more robust by deliberate overdesign than can several small tanks of the same design pressure. It has thicker walls for the same design pressure than a small tank and, therefore, is more resistant to external damage. On the other hand, if the larger tank has larger connecting lines, the relative risk may be greater if release rates through the larger lines increases the risk more than the tanks inherently greater strength reduces it. A large tank has the potential for releasing more material. In transporting hazardous materials, the benefits of head shields and shelf couplers have been shown through quantitative risk assessment. Head shields are heavy steel plate attached to the ends of tank cars to provide resistance to puncturing by couplers if there is a derailment. Shelf couplers are couplers designed to resist disconnecting if there is a derailment of railroad cars. Maintaining tank car integrity in a derailment is often the most important line of defense in transportation of hazardous materials.

E. Safer Storage Conditions

The hazards associated with storage facilities can often be reduced significantly by changing storage conditions. The primary objective is to reduce the driving force available to transport the hazardous material into the atmosphere in case of a leak [16]. Some methods to accomplish this follow.

1. Dilution

Dilution of a low-boiling hazardous material reduces the hazard in two ways:

a. The vapor pressure is reduced. This has a significant effect on the rate of release of material boiling at less than ambient temperature. It may be possible to store an aqueous solution at atmospheric pressure.
b. In the event of a spill, the atmospheric concentration of the hazardous material will be reduced, resulting in a smaller hazard downwind of the spill.

The reduction of vapor pressure by diluting ammonia, monomethylamine, and hydrochloric acid with water is shown in Table 1.

The relative size of hazard zones from possible loss of containment and releases to the atmosphere is much smaller when the material has been diluted, compared with that of the anhydrous materials. This is illustrated in Fig. 4 for monomethylamine.

The larger circle is the area that could be exposed to a specified atmospheric concentration of monomethylamine stored as an anhydrous liquid. The smaller circle is the area that could be exposed to a specified atmospheric concentration of monomethylamine stored as an aqueous solution. The elliptical figures represent a gas cloud caused by an east--southeast wind.

2. Refrigeration

Loss of containment of a liquefied gas under pressure and at atmospheric temperature causes immediate flashing of a large proportion of the gas. This is followed by slower evaporation of the residue. The hazard from a gas under pres-

Table 1 Vapor Pressure of Aqueous Ammonia, Monomethylamine, and Hydrochloric Acid Solutions

Ammonia at 21°C		Monomethylamine at 20°C		Hydrochloric acid at 25°C	
Concentration (wt. %)	Vapor pressure, (atm)	Concentration (wt. %)	Vapor pressure, (atm)	Concentration (wt. %)	Vapor pressure, (atm)
100 (anhydrous)	8.8	100 (anhydrous)	2.8	100 (anhydrous)	46.1
48.6	3.0	50	0.62	41	1.0
33.7	1.1	40	0.37	38	0.36
28.8	0.75			32	0.055

Source: Ref. 16.

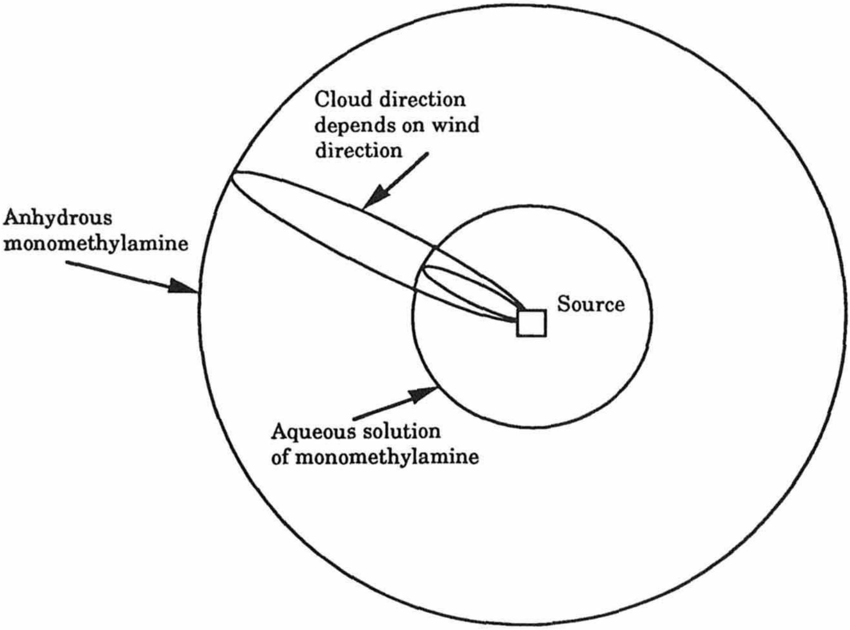

Figure 4 Relative hazard zones for anhydrous and aqueous monomethylamine releases—relative distance within which a specified atmospheric concentration of monomethylamine is exceeded after rupture of a liquid pipe for anhydrous monomethylamine and aqueous monomethylamine. (From Ref. 16.)

sure is normally much less in terms of the amount of material stored, but the physical energy released if a confined explosion occurs at high pressure is large.

Refrigerated storage of hazardous materials that are stored at or below their atmospheric boiling points mitigates the consequences of containment loss in three ways:

a. The rate of release, in the event of loss of containment, will be reduced because of the lower vapor pressure in the event of a leak.
b. Material stored at a reduced temperature has little or no superheat, and there will be little flash if a leak develops. Vaporization will be mainly determined by liquid evaporation from the surface of the spilled liquid, which depends on weather conditions.
c. The amount of material released to the atmosphere will be further reduced because liquid entrainment from the two-phase flashing jet resulting from a leak will be reduced or eliminated.

Refrigerated storage is most effective in mitigating storage facility risk if the material is refrigerated when received. Much of the benefit of refrigerated storage will be lost if the material is received at ambient temperature under its vapor pressure in a transport container. The quantity of material that could be released during unloading may be larger, because unloading lines are normally sized to rapidly unload a truck or rail car and are often larger than the process feed lines. Thus, if the material is shipped at ambient temperature, the benefits of refrigeration will not be available during the operations with the highest release potential.

The economics of storage of liquefied gases are such that it is usually attractive to use pressure storage for small quantities, pressure or semirefrigerated storage for medium to large quantities, and fully refrigerated storage for very large quantities. Quantitative guidelines are available from Lees [14].

It is generally considered that there is a greater hazard in storing large quantities of liquefied gas under pressure than at low temperatures and low pressures. The trend is toward replacing pressure storage by refrigerated low-pressure storage for large inventories. However, this is not always true. It is necessary to consider the risk of the entire system, including the refrigeration system, and not just the storage vessel. The consequences of failure of the refrigeration system must be considered. Each case should be carefully evaluated on its own merits. Usually, refrigerated storage of hazardous materials is undoubtedly safer, such as in the storage of large quantities of liquefied chlorine [14].

3. Design Liquid Storage So Leaks and Spills Do Not Accumulate Under Tanks or Equipment

Around storage and process equipment, it is a good idea to design dikes that will not allow flammable or combustible materials to accumulate around the bottom

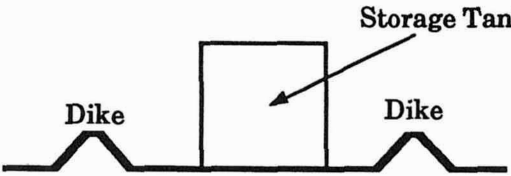

Figure 5a Traditional-diking method. Leaks accumulate around tank. In case of fire, tank will be directly exposed to flames that can be supplied by a large amount of fuel and will be hard to control.

of tanks or equipment if there is a spill. If liquid is spilled and ignites inside a dike where there are storage tanks or process equipment, the fire may be continuously supplied with fuel and the consequences can be severe. It is usually much better to direct possible spills and leaks to an area away from the tank or equipment and provide a fire wall to shield the equipment from most of the flames if a fire occurs. Figure 5a shows schematically a traditional way to design diking, and Figure 5b shows a better design that has met with success.

Even if a material is not flammable it may not be desirable to allow material to accumulate under tanks and equipment. For example, if bromine or acids are spilled in a nondrained dike area containing storage tanks, the automatic dump valve on the tanks may rapidly become corroded on the outside, making it impossible to transfer contents to another storage vessel.

The design in Fig. 5a is usually undesirable for flammable toxic liquids, because it will allow flames from a spill that becomes ignited within the diked area to "cook" the tank. Such a fire may be very dangerous and hard to control because of the possibility of the tank rupturing.

The design in Fig. 5b will divert spills from the immediate area of the tank. In the event of a fire the tank will be shielded by the fire wall. Such a fire is easier to control, and the tank is less likely to rupture.

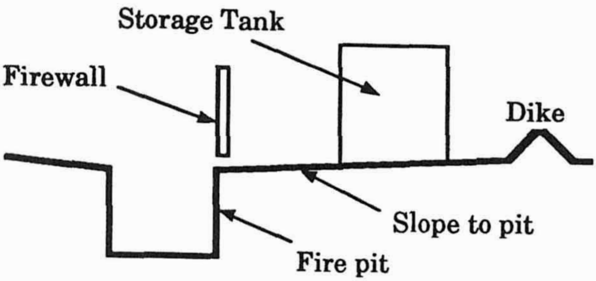

Figure 5b More desirable diking method. Leaks and spills will be directed away from tank. In case of fire, tank will be shielded from most of the flames and fire will be easier to fight.

The surface area of a spill should be minimized for materials that are highly toxic and have a significant vapor pressure at ambient conditions, such as acrylonitrile or chlorine. This will make it easier and more practical to collect vapor from a spill or to suppress vapor release with foam. This may require a deeper nondrained dike area than normal, or some other design that will minimize surface area, to contain the required volume. A deep dike area requires special considerations to maintain its integrity in areas where there is a high water table. For highly flammable materials, the dike area must be such that it is adequately vented in case of a fire. It is usually not desirable to cover a diked area to restrict loss of vapor if the spill consists of a flammable or combustible material.

4. Minimize Use of Underground Tanks

At one time, burying tanks was recommended because it minimized the need for a fire protection system, dikes, and distance separation. At many companies this is no longer considered good practice. Mounding, or burying tanks above grade, has most of the same problems as burying tanks below ground, and is usually not recommended.

Problems with buried tanks include

a. Difficulty in monitoring interior and exterior corrosion (shell thickness)
b. Difficulty in detecting leaks
c. Difficulty of repairing a tank if the surrounding earth is saturated with chemicals from a leak
d. Potential contamination of groundwater due to leakage

Governmental regulations concerning buried tanks are becoming stricter. This is because of the large number of leaking tanks that have been identified as causing adverse environmental and human health problems.

(*a*) *Consequences of leaking tanks.* The following is a real possibility [17]: A site where an underground tank has been used is found to have leaked. If the leak is not cleaned up to "background" levels by the time an environmental regulatory agency is involved, the agency may decide that a portion of the plant must be designated as a waste disposal site. The plant could then be required to provide a waste site closure plan, hold public hearings, place deed restrictions on the plant property, and finally, provide a bond that would cover the cost of closing the site and also analyzing and sampling groundwater for up to 30 years.

Product leaking from an underground storage tank will migrate downward until it encounters the water table, where it will then flow with the groundwater, leaving a long trail of contaminated soil. Above the water table, some product will be absorbed onto the soil particles and into the pore space between the soil particles. If the soil is later saturated by water, product stored in the pore spaces may be released, causing a reappearance of the free product and movement of the material into previously unaffected soil.

Vapor-phase contaminants travel much faster than do waterborne contaminants. Excavations in and around a leaky underground storage tank that contained gasoline or highly flammable chemicals should be performed with caution, as explosive pockets may exist in the soil.

The U. S. Environmental Protection Agency (EPA) regulates some 2 million tanks containing various liquids at about 750,000 sites. The total number of underground tanks may be 7–15 million. The EPA has documented more than 100,000 contaminated sites, but many leaks probably remain unreported. The scope of the problem was revealed by the EPA in 1983, when it reported that, in the United States, 11 million gal of gasoline seep into the soil each year. This compares with the Exxon Valdez 11 million gal oil spill in March 1988, but it happens year after year. Just 1 gal of gasoline can make 1 million gal of water unsafe to drink; a 1 oz shot glassful would pollute an Olympic-sized swimming pool full of drinking water.

The EPA estimates that, among underground storage tank systems (petroleum and hazardous substances) in place throughout the United States, approximately 25% are nontight and are likely to have leakage caused by failure of past practices and technology. Most of the contaminated sites the EPA has documented involve corroded single-wall steel tanks and piping that have been in the ground for at least 16 years [18, 19].

(*b*) *Regulations.* Several states have enacted laws setting standards for underground storage tanks. The EPA has issued regulations requiring notification to the appropriate regulatory agency about age, condition, and size for underground storage tanks containing commercial chemical products [20].

The EPA has stated that there is a clear need for comprehensive management of underground storage tanks. It is noteworthy that these regulations are not meant to deal with underground storage of hazardous waste. In the United States, because the EPA has followed industry practice and state regulations, the final ruling requires secondary containment for all hazardous substance underground storage tanks. This is because "secondary containment systems insure all hazardous substance underground storage tanks will be provided with effective detection methods, and if a leak occurs from the primary containment structure into the interstitial space, corrective action will be simplified because it is very unlikely to impact the surrounding environment."

(*c*) *Secondary containment.* Acceptable secondary containment systems are described as barriers, either integral to the tank system design (such as double-walled tanks or double-walled pipes), or located within the underground storage tank system, that present a barrier between all parts of the underground storage tank system and the environment [18]. Double-walled tanks and piping should be considered for aboveground tanks and piping containing highly toxic liquids.

Concrete and fiberglass vaults are often used. Soil and clay liners are not allowed. Flexible liner systems have been developed that may be a cost-effective and environmentally sound alternative. A flexible liner offers an environmental benefit that rigid systems cannot provide—the ability to "give" with movement of the earth and maintain its integrity under various conditions, such as shifting ground. Concrete and fiberglass liners can be subject to environmentally induced cracks. Flexible liners must be impervious to chemical and physical breakdowns caused by the soil, mildew, rain, temperature, rodents, and the chemicals to which they can be exposed. State-of-the-art liner technology has overcome many of the previous problems with seams, low mechanical strength, and chemical resistance. Materials used in liners and membranes include Hytrel, polyurethane, polyvinyl chloride, chlorinated polyethylene, and various blends. Base fabrics include nylon, polyester, glass, and aramid. It is important that, if a liner system is used, leaks should be collected and monitored and sent to a collection area for treatment.

(*d*) *Piping systems.* An important consideration is the EPA's concern over piping systems. For all underground storage tank systems, performance standards consistent with those for tanks were set for pipes and pipe systems. There is evidence that 84% of underground storage tank system test failures are due to loose tank fittings or faulty piping. Piping releases occur twice as often as tank releases. In particular, loose joints tend to occur. For hazardous substance underground storage tank systems, there are two options: trench liners and double-walled pipes. Double-walled pipes are difficult to assemble and are subject to failure caused by service conditions, such as frost heaves or pressure from above. Rigid trench liners are also subject to failure by service conditions. Flexible trench liners can surround the pipe system completely and sustain the movement within the service area. Flexible trench liners (discussed earlier) are becoming a popular solution to secondary containment of piping systems.

Current EPA regulations do not require secondary containment for new petroleum underground storage tank systems, but do require secondary containment for hazardous substance underground storage tank systems.

Tables 2 and 3 list requirements for hazardous and petroleum underground storage tank systems.

The EPA's Office of Underground Storage Tanks defines underground tanks as those with 10% of more of their volume, including piping, underground [21]. An aboveground tank that does not have more than 10% of its volume (including piping) underground is excluded from the underground tank regulations. Note, however, that a 5000 gal tank sitting wholly atop the ground but having 1400 ft of 3-in. buried pipe or 350 ft of 6-in. buried pipe is considered an underground storage tank.

(*e*) *Detecting leaks.* Small leaks are difficult to detect. The present EPA and American Petroleum Institute (API) standard for nonleaking underground tanks is 0.05 gal/hr (3.15 cm^3/min), above which a tank is considered to be leaking. Leak detection measurements can be influenced by many factors, making it dif-

Table 2 Secondary Containment and Release Detection Requirements for Hazardous Substance Underground Storage Tank Systems

Type	Tanks	Pipes
New	Secondary containment including double-walled tanks, external liners, or other acceptable systems with monitoring every 30 days.	1. Pressurized piping including double-walled a. Automatic line-leak detectors b. Secondary containment including trench or walled pipes 2. Suction piping a. Secondary containment including trench lining or double-walled pipes
Existing	Same as for petroleum tanks until December 1998	Same for petroleum pipes until Dec. 1998

Source: Ref. 51.

Table 3 Secondary Containment and Release Detection Requirements for Petroleum Underground Storage Tank Systems

Type	Tanks	Pipes
New	Monitoring every 30 days a. Automatic tank gauging b. Vapor monitoring c. Groundwater monitoring d. Interstitial monitoring or other (no less stringent)	1. Pressurized piping using one or more of the following methods: a. Automatic line-leak detectors b. Annual line-tightness testing or monthly monitoring using any tank monitoring method 2. Suction piping a. Annual line tightness testing or monthly monitoring using any tank monitoring method
Existing	Inventory control or manual tank gauge plus tank tightness testing (every 5 years until 1998, or until 10 years after installation)	No detection required for suction piping if it meets certain design criteria (see regulations)

Source: Ref. 51.

ficult to detect small errors. Some of the factors that can cause leak detection errors are

Changes in product temperature
Fluid evaporation
Vapor pockets
Air pockets contracting at a rate different from the tank volume
Tank liquid temperature not in equilibrium with earth and groundwater
Tank deformation during test, creating apparent leaks or masking a leak
Tank pressure during a test, causing deflection in the tank and a volume change
Tank geometry and inclination
Surface waves, vibration
Tank not level
Water table
Piping leaks that could be interpreted as a tank leak
Operator error

(*f*) *Corrosion problems.* Tanks subject to internal corrosion are not good choices for underground service because of the necessity of monitoring wall thickness.

Underground tanks and piping of carbon steel should be considered for corrosion protection measures, such as external tar-like coatings and magnesium anodes. Joints in underground piping should be minimized by welding. Pipes may use a combination of wrapping and sprayed-on coatings. When flanges are necessary, such as with valves, external coatings should be used.

(*g*) *Buoyancy problems.* Under some circumstances during which the water level can be high, empty tanks can float out of the ground. In such an event, it is necessary to properly design the tanks with weights or tie-down bolting to prevent floating.

(*h*) *Summary of use of underground tanks.* Because of more stringent regulatory requirements, potential future liabilities, and the cost of building and operating underground storage tank systems, it is probably inherently safer to use aboveground storage, with suitable spacing, diking, and fire protection facilities. This avoids most of the potential groundwater contamination problems that could result from a leak. The potential problems from leaks can be exceedingly expensive and harmful to the environment if underground storage tank systems are improperly designed, constructed, and maintained. However, with modern technology, if it is necessary, it is possible to design underground storage systems with a high degree of integrity that will make leaks to the environment highly unlikely, but the cost may be high.

Some states and parts of some countries require that flammable liquid storage tanks be buried, unless a modification is granted. Local authorities should be contacted to check legal requirements.

IV. DESIGN OF TANKS, PIPING, AND PUMPS

Six basic tank designs are used for the storage of organic liquids [22]:

Fixed roof
External floating roof
Internal floating roof
Variable vapor space
Low-pressure tanks
High-pressure tanks

The following is a brief discussion of each tank design type:

A. Fixed-Roof Tanks

A typical fixed-roof tank consists of a cylindrical steel shell with a permanently affixed roof, which can be cone-shaped, dome-shaped, or flat. These tanks are equipped with a pressure–vacuum vent that allows them to operate at a slight internal pressure or vacuum to prevent release of vapors during very small changes in temperature, pressure, or liquid level. Such tanks are the least expensive of current conventional tank designs and are considered the minimum acceptable for storage of organic liquids. They are not considered suitable for the storage of highly toxic, hazardous materials.

B. External Floating-Roof Tanks

A typical external floating-roof tank consists of a cylindrical steel shell with a roof that floats on the surface of the stored liquid, rising and falling with the liquid level. The liquid surface is completely covered by the floating roof, except at the small annular space between the roof and the tank wall. A seal or seal system attached to the roof contacts the tank wall, occasionally with small gaps, and covers the annular space. The seal slides against the tank wall as the roof is raised or lowered. The purpose of the floating-roof and seal or seal system is to reduce the evaporation loss of the stored liquid. These tanks are usually not considered suitable for the storage of highly toxic hazardous materials.

C. Internal Floating-Roof Tanks

An internal floating-roof tank has both a permanent fixed roof and a deck inside. The deck rises and falls with the liquid level and either floats directly on the liquid surface (contact deck) or rests on pontoons several inches above the liquid surface (noncontact deck). The terms “deck” and “floating roof” can be used interchangeably in reference to the structure floating on the liquid inside the tank. There are two basic types of internal floating-roof tanks: (1) tanks in which the fixed roof is supported by vertical columns within the tank, and (2) tanks with a self-supporting fixed roof and no internal support columns. Fixed-roof tanks that have been retrofitted to employ a floating deck are typically of the first type. External floating-roof tanks typically have a self-supporting roof when converted to an internal floating-roof tank. Tanks initially constructed with both a fixed roof and a floating deck may be of either type.

The deck serves to restrict evaporation of the liquid material. Both contact and noncontact decks incorporate rim seals that slide against the tank wall as the deck wall moves up and down. In addition, these tanks are freely vented by circulation vents at the top of the fixed roof. The vents minimize the possibility of vapor accumulation approaching the flammable range. An internal floating-roof tank that is not freely vented is considered a pressure tank. These tanks are usually not considered suitable for the storage of highly toxic hazardous materials.

D. Variable Vapor-Space Tanks

Variable vapor-space tanks are equipped with expandable vapor reservoirs to accommodate vapor volume fluctuations attributable to temperature and barometric pressure changes. Variable vapor-space tanks can be used independently, but they are normally connected to the vapor spaces of one or more fixed-roof tanks There are two common types of variable vapor-space tanks:

a. Lifter roof tanks have a telescoping roof that fits loosely around the outside of the main tank wall. The space between the roof and the wall is closed either by a wet seal, which is a trough filled with liquid, or a dry seal, which uses a flexible, coated fabric.
b. Flexible diaphragm tanks use flexible membranes to provide an expandable volume. They may be either separate gasholder units, or integral units mounted on top of fixed-roof tanks. They are not considered suitable for the storage of highly toxic hazardous materials.

E. Low-Pressure Tanks

Low-pressure storage tanks for highly hazardous toxic materials should meet, as a minimum, the American Petroleum Institute (API) 620 standard, *Recommended Rules for the Design and Construction of Large Welded, Low-Pressure Storage Tanks* [23]. This standard covers tanks designed for all pressures under 15 psig. It allows low-pressure tanks to be constructed in general accordance with unfired pressure vessel codes, except that higher allowable design stress values are normally used. There are no specific requirements in API 620 for highly hazardous toxic materials.

API 650, *Welded Steel Tanks for Oil Storage* [23], has limited applicability to storage of highly hazardous, toxic materials because it prohibits refrigerated service and limits pressures to 2.5 psig and then only if designed under certain conditions. Most API 650 tanks have a working pressure approaching atmospheric pressure; hence, their pressure-relieving devices must vent directly to the atmosphere. Its safety factors and welding controls are less stringent than required by API 620. Another reference for the design of low-pressure storage tanks may be found in ANSI/API-620–1986 [24].

Horizontal and vertical cylindrical tanks are used to store highly toxic liquids at atmospheric pressure. Horizontal, vertical, and spherical tanks are used for refrigerated liquefied gases that are stored at atmospheric pressure. The design pressure of tanks for atmospheric and low-pressure storage at ambient temperature should not be less than 100% of the vapor pressure of the material at the maximum design temperature. The maximum design metal temperature to be used takes into consideration the maximum temperature of material entering the tank and the maximum ambient temperature including solar radiation effects.

Since discharges of vapors from highly hazardous toxic materials cannot simply be released to the atmosphere, the use of a weak seam roof is not normally acceptable. It is best that tanks be designed and stamped for 15 psig to provide maximum safety and a pressure-relief systems must be provided to vent to equipment that can collect, contain, and treat the effluent.

The minimum design temperature should be the lowest temperature to which the tank will be subjected, taking into consideration the minimum temperature of material entering the tank, the minimum temperature to which the material may be autorefrigerated or mechanically refrigerated, and the minimum ambient temperature of the area where the tank is located. API 620 provides for installations in areas where the lowest recorded 1-day mean temperature is –50°F.

Although either rupture disks or relief valves are allowed on storage tanks by code, rupture disks by themselves should not be used on tanks for the storage of highly hazardous toxic materials, since they do not close after opening and may lead to continuing release of toxic fumes or gases to the atmosphere.

The API 620 Code requires a combined pneumatic hydrotest at 125% of design tank loading. In tanks designed for low–density liquid, the upper portion is not fully tested. For highly hazardous toxic materials, consideration should be given for hydrotesting at the maximum specified design liquid level. It may be required that the lower shell thickness be increased to withstand a full head of water, and that the foundation be designed such that it can support a tank full of water, or the density of the liquid, if it is greater than water. Testing in this manner not only tests the containment capability of the tank, but it also provides an overload test for the tank and the foundation, similar to the overload test for pressure vessels.

In addition to radiography required by API 620, it is recommended that all T-welds and any other weld subject to hoop stress be 100% radiographed, and that consideration be given to 100% radiography of all accessible welds. Stress relieving should be done in the shop when possible, or done locally in accordance with API 620.

Proper preparation of the subgrade and grade is extremely important for tanks that are to rest directly on grade. Foundations should be designed to safely carry the weight of the tank and its contents when filled with water, or the liquid, if it has a density greater than water, to the highest level required for the hydrostatic test. Refer to Appendix C of API 620, *Suggested Good Practice Regarding Foundations* [23].

Precautions should be taken to prevent ground-freezing under refrigerated tanks, as this can cause the ground to heave and damage the foundation or the tank. Designing for free air circulation under the tank is a method for passive protection from ground-freezing.

Steels lose their ductility at low temperatures and can become subject to brittle failure. There are specific requirements for metals to be used for refrigerated storage tanks in API 620, Appendices Q and R. Charpy V–notch specimens must be taken from the weld metal and from the heat-affected zone of the test plates. Impact tests for welding procedure qualification are suggested for primary components when heavy welding is used on primary components that have not been impact tested. Primary components are those for which failure would result in leakage of the liquid being stored and other parts subject to failure at refrigerated temperatures and subject to thermal shock whether or not in contact with the refrigerated liquid.

Corrosive chemicals and external exposure can cause tank failure. Materials of construction should be chosen so that they are compatible with the chemicals and exposure involved. Welding reduces the corrosion resistance of many alloys, leading to localized attack at the heat-affected zones. This may be prevented by the use of the proper alloys and weld materials, sometimes combined with annealing heat treatment.

External corrosion can occur under insulation, especially if the weather barrier is not maintained, or if the tank is operating at conditions under which condensation is likely. This form of attack is hidden and may be unnoticed for a long time. Inspection holes and plugs should be installed in the insulation to monitor possible corrosion under the insulation.

Some chemicals become more corrosive if contaminated with water, air, or other materials. For example, dry chlorine is customarily handled in carbon steel, but becomes very corrosive if small amounts of water are present.

Brittle fracture is a potentially disastrous failure mode. This can be caused by hydrogen, caustic, nitrates, hydrogen sulfide, or chloride ions. It is also caused by fatigue, mechanical shock, thermal shock, thermal fatigue, very cold temperatures, and zinc embrittlement (of stainless steel at high temperatures). Stress increases the rate of corrosion, and the potential for stress crack corrosion must be considered. Brittle fracture can occur at ambient or slightly lower than ambient temperatures. This is more likely to occur in heavy-walled vessels than in thin-walled vessels, which tend to yield, rather than fracture. For facilities storing highly hazardous toxic materials in vessels, it is recommended that they be analyzed for potential failure by fracture mechanics and failure mode diagrams.

F. Case History: Low-Pressure Tank Failure

The following case history illustrates some of the problems that can occur with low-pressure tanks that have been improperly sited, designed, built, diked, and tested [25,26].

On January 2, 1988, a 40–year-old, 48-ft–high, 120-ft–diameter, reassembled tank at the Floreffe, Pennsylvania, terminal of the Ashland Oil Company suddenly ruptured and emptied its contents in a massive inland waterway fuel oil spill. An estimated 750,000 gal washed 50 ft high and over a 10-ft high dike into a drainage system on adjacent property, that eventually drained into the Monongahela River, which runs into the Ohio River. This was one of the worst spills ever in inland water. It was necessary to shut off water to 23,000 Pittsburgh residents, and the spill threatened supplies for nearly 1 million more persons downstream, including more than 70 communities. An investigation concluded that it was a very abrupt high–energy failure. The tank split vertically, like a zipper, in less than 1 s. The force of the spurting fuel oil moved the tank backward 100 ft off its foundation, like a balloon shooting away when the air escapes. It cracked, collapsed, and crumpled. There were no injuries. The spill was expected to cost 18 million dollars.

The tank was first erected in Cleveland. A flaw existed in one of the plates which was fabricated in 1940. Its steel plate was 1-in. thick at the bottom and 1/2-in. thick at the top. Two years earlier a contractor cut up the tank, vertically and horizontally, and relocated it to Ashland's terminal. The panels were welded together in eight staggered rows, resulting in T-shaped weld intersections. The fatal flaw was near one of these intersections, 8 ft above the ground. The crack could have been caused by defects in welding the structure, or the material. It was also speculated that welding heat from disassembling and then reassembling the tank could have made the tank more brittle. When rewelding a tank, the cut is not always made on the old weld, but sometimes next to it. The local community did not have the resources or expertise to enforce tank standards. Ashland was accused of failing to obtain a written permit to erect the tank and of failing to hydraulically test it. Ashland was fined 18,000 dollars for improperly cutting up the collapsed tank and failing to test for an explosive atmosphere.

Welds made near the flaw when the tank was originally built and reconstructed increased stress and made the steel more brittle. Other factors include

a. The low-carbon, high-phosphorus composition of the 1940 steel is more brittle than the material used now.
b. The diesel fuel just pumped into the tank increased stress.

c. The near-freezing temperature at the time of the failure made the metal even more susceptible to brittle fracture.
d. The tank was partially x-rayed with 39 x-rays after being reconstructed. It was reported that 22 of these welds were defective. The weld immediately above the flaw was not one of those x-rayed.
e. The tank was not water-tested with a full hydrostatic load. A full hydrostatic load of water would have caused a new set of problems, such as what to do with the water in the tank, which would be considered contaminated and could not have been sent to the river. The tank was tested with 5 ft of water and with penetrating oil to detect cracks.
f. The tank may have shifted because of a leak in a nearby underground water pipe.

1. Immediate Cause

The immediate cause was the failure of the defective metal in the tank, causing the tank to split.

2. Contributing Causes

The old tank was cut apart, moved, and rewelded without adequate safeguards. The tank was 50 years old and the original steel was defective by modern standards. Many welds had been found to be defective, but not all the welds had been x-rayed. The foundation may have shifted, and cold weather may have played a part in increasing the brittleness of the steel. The tank was tested with 5 ft of water, but not a complete hydrostatic test.

3. Root Cause

The root cause was a management system that

a. Allowed construction without proper testing
b. Allowed welding without proper workmanship
c. Allowed use of an old tank with defective steel
d. Relied on the company to enforce tank standards without expertise from the local community

G. High-Pressure Tanks

The design of vessels above 15 psig falls within the scope of the American Society of Mechanical Engineers (ASME) Boiler and Pressure Vessel Code, Section VIII *Pressure Vessels, Division I* [27] and should be designated as lethal service. *Lethal service* means containing substances that are "poisonous gases or liquids of such a nature that a very small amount of the gas or vapor of the liquid mixed or unmixed with air is dangerous to life when inhaled. This class includes substances which are stored under pressure or may generate a pressure if stored in a closed vessel." This is a similar, but not exactly, the same definition as that for "category M" fluid service of the ASME Pressure Piping Code. Pressure vessels for the storage of highly hazardous toxic materials should be designed in accordance with requirements of the ASME code, even if they could be exempted because of high pressure or size. The code requires that the corrosion allowance be adequate to compensate for the more or less uniform corrosion expected to take place during the life of the vessel and not weaken the vessel below design strength.

1. Piping

Piping falls within Chapter VIII of the ASME Pressure Piping Code, *Piping for Category M Fluid Service. Category M fluid service* is defined as "fluid service in which the potential for personnel exposure is judged to be significant and in which a single exposure to a small quantity of a toxic fluid, caused by leakage, can produce serious irreversible harm to persons on breathing or on bodily contact, even when prompt restorative measures are taken."

Piping systems should meet the requirements for both category M fluid service and for "severe cyclic conditions." Piping systems should be subjected to a flexibility analysis and, if found to be too rigid, flexibility should be added. Severe vibration pulsations should be eliminated. Expansion bellows, flexible connections, and glass equipment should be avoided. Pipelines should be designed with the minimum number of joints, fittings, and valves. Joints should be flanged or butt-welded. Threaded joints should not be used.

If sections of pipe can be isolated with expandable liquid trapped between valves, overpressure protection should be installed on the pipeline between valves. This may be in the form of a pressure-relief valve, an expansion chamber, or a rupture disk piped to a closed pressure tank with an alarm.

2. Venting and Drainage

In the installation of a storage tank, good engineering should go into the design of a drain and a vent. Low-pressure storage tanks are particularly susceptible to damage if good venting practices are not followed. A vent that does not function properly at all times may cause damage to the tank from pressure that is too high or too low. Vapors should go to a collection system if necessary. The following is a checklist for good tank and vent relief design:

a. Be sure vents are large enough for the worst case; include allowances for headers, and so forth.
b. Define and document the worst case venting and relief scenario.
c. Supply vacuum relief if a vacuum can occur.
d. Have no traps in the vent line. Be especially careful with headers.
e. Have no traps in nitrogen lines for inerting tanks.
f. All possibilities for blockage of vents must be considered and minimized, such

as polymer formation, ice, solids, coatings, insects, birds, flying vegetation, flame arrestors, corrosion, or other.

g. Avoid possible plugging by ice. Insulate and heat with tracing if necessary.
h. Design a system for safe inspection and maintenance of vents and relief devices.
i. Develop and use good operating procedures for inspecting and maintaining vents and reliefs.
j. Inspect vents and relief devices on a periodic basis—at least once a year.
k. Design tanks with as high a pressure as practical. Consider 15-psig API tank design limits for low-pressure tanks to make it easier and more economical to design suitable vent relief systems.
l. Special concern should be given to large, low-pressure tanks to avoid high- and low-pressure conditions since these tanks are fragile and sensitive to internal pressure changes.
m. Do not permit filling of tanks with liquids into the top cones of low-pressure tanks.
n. Install level detectors and have remote redundant high-level switches and alarms for tanks containing hazardous materials
o. Install drains in the low point of relief vent lines to provide a drain for water that might collect there.
p. A loose-fitting weather cap should be installed over stack openings, but this does not eliminate the need for a drain for condensation and possible relief valve leakage.
q. Design the outlets of vents and vent drains so localized tank shell heating is avoided if flammable vapors are ignited. Avoid flame impingement on any part of the tank if vapors from vents are ignited.
r. Consider the environmental consequences of tank venting.
s. Vent tanks to contained areas (preferably remote from the tank) so liquid overflow is contained.
t. Do not use weak-seam roof tanks for emergency relief design.
u. A management of change procedure should be in place to evaluate process changes on a vent and relief system for a tank.

V. INSTRUMENTATION

Instrument systems [1] are an essential part of the safe design and operation of systems for storing and handling highly toxic hazardous materials. They are key elements of systems to eliminate the threat of conditions that could result in loss of containment. They are also used for early detection of releases, so that mitigating action can be taken before these releases result in serious effects on persons in the plant or in the public sector, or on the environment.

The basic approach is to direct the system to the safest-operating level relative to persons or the environment when any emergency condition is detected, including power loss. An important concept of process control safety is to have adequate redundancy to reduce unwanted shutdowns and maintain an adequate level of certainty that a safe state will result if a real emergency does occur. As far as possible, instruments should be of the "fail-safe" type

Every effort should be made to eliminate direct (Bourdon-type) pressure gauges. Diaphragm pressure gauges constructed of appropriate corrosion-resistant materials are preferred. Flow limiters should be used to limit flow if there is loss of integrity.

An accurate indication of level is critical to the avoidance of overflow and other serious conditions in storage vessels. Level control is important to avoid overfilling, to prevent a liquid release. A very low level can result in loss of pump suction and possible pump failure. Capacitance level sensors are often used because they require little maintenance and are highly reliable; since they give only point measurements, they are best used as backup for analog devices, such as differential pressure level gauges or strain gauges. Strain gauges ("load cells") should be considered, as they are capable of high accuracy and do not require penetration of the containment vessel. Level gauges using glass or plastic should be avoided.

Flow measurements using nonintrusive or low mechanical action principles are desired, such as magnetic, vortex-shedding, or Coriolis-type flowmeters. Orifice plates are easy to use and reliable, but have a limited range and may not be suitable for streams that are not totally clean. Rotameters with glass tubes should not be used.

Temperature measurements usually require intrusion into the fluid. When thermowells are exposed to hazardous materials, they should comply with the same material requirements for vessels and pipes, to reduce failure from erosion and corrosion. In storage tanks, tank temperature is often monitored, but usually not controlled. Temperature indication is desirable to indicate that the tank contents are approaching a hazardous region and to indicate thermal stratification. For some materials, such as acrylic acid, temperature control is necessary during storage to prevent freezing if it gets too cold and to prevent chemical reaction if it gets too warm.

Alarms should act as early-warning devices to anticipate a potentially hazardous situation. Alarms that are essential to safety should be identified and classified separately from process alarms. Redundancy may be required (see following)

A. Redundancy of Process Control Systems

Computer-controlled chemical plants and storage facilities are becoming the rule, rather than the exception. As a result, it is possible to measure more variables and get more process information than ever before. However, process control systems contain components that will eventually fail. Therefore, redundancy of key components must be considered [28]. *Redundant measurement* means obtaining the same process information with two or more like measurements or two or more measurements using different principles.

The control system must incorporate appropriate levels of redundancy from the point of measurement through the input path, processing path, and output path, including actuators to ensure safety, controllability, and reliability.

Before one can consider redundancy and critical instrument system issues, one must be certain that the right measurements are being made; this section assumes that the right measurements are being made.

The system must be designed such that, when an instrument or control component fails, the plant is still safe and continues to function in a normal manner. Questions to be considered include safety, process hazard, reliability, sensitivity of the process, and economics. It is recognized that different parts of a plant may require different degrees of redundancy, or perhaps none at all.

The degree of redundancy that is appropriate depends largely on an assessment of the process hazard and the process sensitivity. *Process hazard* is primarily a measure of the potential for injury to persons, loss of property, or environmental damage. *Process sensitivity* is primarily the potential for economic loss, and is also a measure of the "degree of difficulty" to start-up or shutdown a process, or the consequence of a trip. *Operability* is the ability to start-up, run, and shutdown a plant or storage facility, as designed. In some plants, operability is closely tied to minimizing false trips.

The strategy plant designers should use depends on the degree of process hazards and process sensitivity that the plant is considered to have. For plants that have sections that are considered hazardous and that have a high degree of sensitivity (defined later), it is recommended that triple redundancy be used, with a "two out of three" voting system. *Process sensitivity* is defined by how a process reacts to a condition before serious problems in safety or process integrity arise, and deals primarily with potential economic losses in a highly sensitive plant. It also deals with the consequences of false trips. Plants with lower degrees of process sensitivity or process hazard may require less redundancy or perhaps none at all.

An analog process variable measurement that is continuously monitored by a digital computer is generally preferable to a single-point or single switch, such as a high-level switch or high-pressure switch. An analog process variable measurement is continuous and can give valuable information about what the value *was* and *now* is and can be used to compute values or compare with other measurements.

A digital (single-point) process variable measurement determines only whether or not switch contacts are open. It can indicate that something has happened, but not that it is going to happen.

Common cause, or systematic failure, results when a system that is common to all or most of the control system fails, causing all or part of the control system to fail. The best ways to reduce common cause failure are by diversity of hardware and software, and by effective preventive maintenance programs.

The control mechanism should be "intelligent" enough to detect a problem and correct it before the problem reaches to a serious stage—this may require corrective action at an early stage. There can be an excess of alarms—as the number of alarms goes up, the probability of an operator responding correctly goes down.

Electronic circuits or relays are subject to failures, such that when the safety system is called on to operate, it may be incapable of doing so; they may not be really fail-safe. The best way to ensure that the safety system has not suffered a fault is to continuously exercise it. This is best done if the safety system is also responsible for control and is constantly in use [29].

VI. CONTAINMENT

A. Preventing Backflow

Backflow, or reverse flow, is a situation in which a liquid or gas is flowing opposite the intended direction. Inherently safer plants are designed to minimize backflow [30].

In chemical processes or storage areas in which there is flow of liquids or gases in pipes, it is usually important to prevent material from flowing opposite the intended direction. Backflow can happen for many reasons, such as when the pressure in a line that is normally flowing into another pipe or system becomes less than the line or system to which it is connected, and the valves are open or leaking. In reactive chemicals reviews the question "can backflow occur?" is usually asked, because backflow and subsequent inadvertent mixing of process streams can often lead to serious reactive chemical incidents during which human health could be jeopardized.

The prevention of backflow is becoming more important because of environmental considerations requiring storage tanks and other items of equipment to be tied together in vent header collection systems that are often sent to incinerators or scrubbers. It is imperative that backflow be prevented in these systems, but doing so presents a challenge:

The pressure that is available is often low, since many storage tanks have low-pressure ratings.
Flows are often very low, sporadic, and unpredictable.

Backflow prevention involves the following:

a. Detection: suitable control and sensing devices to detect backflow conditions

b. Operation: proper operation of equipment, such as turning on pumps and opening valves in the proper sequence
c. Action: taking action to prevent backflow if backflow conditions are detected
d. Design: design of equipment to make backflow unlikely

1. Detection

(*a*) *Flowmeters.* Flowmeters can be used to indicate that backflow could be occurring in certain situations. Flowmeters have a range at which they are accurate (the accurate range). Below a certain flow, the signal from the flowmeter becomes inaccurate, but still indicates a positive flow (the inaccurate range). Eventually, the flow will become so low that the signal from the flowmeter cuts out completely or is erratic; therefore, it is not certain whether there is positive-flow, no-flow, or backflow (the uncertainty range). Signals from the flowmeter in the inaccurate range are usually not reliable enough to be used to control or to do mass and energy balances, but they can still indicate whether there is a positive flow. In situations during which the flow sometimes normally falls into the uncertainty range of the flowmeter, the readings cannot be trusted. Therefore, in these low-flow cases, a flowmeter should not be the primary method of preventing backflow. Low-pressure vent collection systems often fall into this scenario.

(*b*) *Pressure.* An important measurement that can help detect backflow is pressure. If the pressure is decreasing as the flow is progressing from the inlet to the outlet, there cannot be backflow. If the pressure increases from outlet to inlet, there is or could be backflow. *In many cases, the best type of device to detect backflow conditions is a differential pressure transmitter installed around a restriction in the line to cause some measurable pressure to be created.*

(*c*) *Physical state or composition.* Frequently, backflow may be detected by the condition of material in the system. For example, if the temperature in a pipe upstream from the entrance to an incinerator becomes hot, backflow can be assumed and action can be taken to correct the situation. In a nitrogen line feeding a system that could have air in it, an oxygen analyzer in the nitrogen line upstream from where it is tied into the process could detect backflow into the nitrogen system, and suitable action can be taken.

2. Operation

An example of operation to prevent backflow when a centrifugal pump is involved follows.

Order of operations:

a. With discharge block valve closed, start pump.
b. Observe pressure buildup.
c. Open block valve.
d. Initiate flow control, starting with control valve in closed position.
e. Do not to leave pump on too long. A dead-headed pump will build up heat.

3. Action

The action to be taken if backflow conditions are detected during operation usually involves automatically closing valves, shutting down pumps, or relieving pressure. It may also include shutting down the process.

4. Design

Good equipment design can reduce the possibility of backflow. Backflow prevention is a feature that process engineers often incorporate into the design of plants and storage facilities and may not involve the detection of conditions that could lead to backflow. An example of backflow prevention is the use of check valves (nonreturn valves), double or triple valves in series, some kinds of pumps, double-block valves with a vent valve between ("double-block and bleed"), and a suitable selection of design pressures. An example of the latter would be using 150-psig (1034-kPa gauge) steam, with a reducer, feeding into a reactor that is normally at 10 psig (69-kPa gauge). In this situation material could not backflow into the steam line, as long as the pressure differences are maintained.

It should be remembered that valves may leak, and this possibility should be considered in designing backflow prevention systems. Redundant valves may be desirable to reduce the possibility of leaking valves causing problems. Double-block and bleed may be used in some cases to reduce the possibility of leaky valves causing backflow problems.

Check valves are often used in chemical processes and storage facilities, in spite of the general feeling that they are unreliable. In fact, modern check valves with spring-loaded internals and soft seats can be quite reliable. The older swing checks are considered to be relatively unreliable and can easily be installed in the wrong position, such that they will not work. It is good practice, however, not to rely solely on check valves to prevent backflow. Experience has shown that too often, when check valves are really needed to operate, they fail.

5. Flow-Limiting Devices: Provisions for the Safe and Rapid Isolation of Piping Systems and Equipment

It is possible to easily isolate fluids in equipment and piping when potentially dangerous situations occur. This is done using emergency block valves, or EBVs. An EBV is a manually or remotely actuated protective device that is used to provide manual or remote shutoff of uncontrolled gas or liquid flow releases. The EBVs can be used to isolate a vessel or other equipment, or an entire unit operation. Manual valves are often used on piping at block limits where it is unlikely that there would be a hazard to personnel if an accident occurs. Remotely controlled EBVs are recommended on tanks and on piping in areas where it may be hazardous for personnel in the event of an accident, or when a quick response may be necessary.

Any EBVs used on tanks should be as close as possible to the tank flange and not in the piping away from the tank. When EBVs may be exposed to fire, the valve and valve operator must be of a fire–tested design.

The valve actuators for remotely controlled EBVs should be air, nitrogen, or hydraulic pressure-operated, with a spring to close to the fail-safe position. The air or nitrogen connection can be polyethylene tubing that will act as a fusible link, causing the valve to close when air pressure is lost because the tubing has melted or been damaged (Fig. 6). An alternative is to use heat-actuated (such as fusible link) valves.

This could be in conjunction with separately operated remote valves, if desired. For some situations, after careful evaluation, other valves may be considered for EBVs:

a. Control valves that fail closed (spring-loaded).
b. Backflow check valves (these are not normally considered reliable enough for EBVs by many engineers).
c. Excess-flow valves.

Excess-flow valves may be considered for use on the outlet of storage tanks. An excess-flow valve is intended to close automatically if the flow is too high, such as occurs in a pipe failure. The design of excess-flow valves depends on the type of material flowing, as well as on the flow rate. It should be noted that excess-flow valves do not function at low- to medium-flow rates, so they should not be relied on for all possible leak scenarios.

6. Use Strong Vessels to Withstand Maximum Pressure of Process Upsets

It is sometimes possible to anticipate the worst upset in a process or storage system and to design the system to withstand these conditions without relieving the contents through a pressure-relief system. For example, an ARC apparatus can

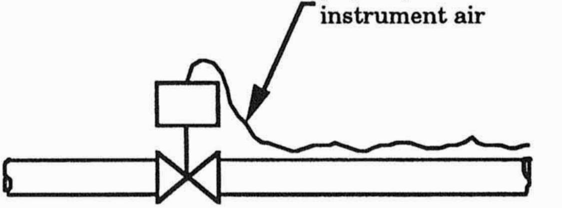

Figure 6 Use of polyethylene tubing on fail-safe, spring-loaded, fire-tested valve used as an emergency block valve.

be used in a laboratory to simulate a styrene polymerization reaction to determine the highest pressure and temperature that the system could achieve. Under certain conditions the actual composition used in the plant will contain some solvent and polymer. It may turn out, for example, that the maximum pressure reached by adiabatic polymerization will be about 300 psig (2068-kPa gauge), when the reaction starts at the normal operating temperature of 120°C (248°F). With this knowledge, it is possible to design polymerization equipment that will withstand this pressure, plus a reasonable safety factor, with the assurance that a runaway will not cause a release of material or equipment rupture. The extra cost of the high-pressure system may be justified, not only by the extra safety, but also by preventing releases to the environment. For example, with high-pressure systems, it also may be unnecessary to have elaborate collection equipment for the polymer and volatile material during runaways. It will still be necessary to have a small relief system to allow thermal expansion of a liquid-full system. This relief system is also necessary to handle hydraulic overfill and fire conditions, but the system will usually be relatively simple.

The possibility of equipment that normally runs at near-atmospheric pressure going into a vacuum condition should also be considered. Vacuum relief systems and vacuum breakers are not always sized correctly. On a hot summer day, a sudden rainstorm can cool a large tank or hopper very rapidly. This causes rapid cooling and contraction of air inside the tank, or condensation of vapors if they are present. This results in very rapid lowering of the pressure inside the tank, which can collapse the tank if insufficient provisions have been made for air to enter the tank. These conditions seem to be common in northern climates, where the rate at which a vacuum is produced is increased in cold weather. In many instances, vacuum devices that are supposed to work are frozen and inoperative, and the tank collapses.

It may be inherently safer to design tanks to handle vacuum than to depend on vacuum-relief devices alone.

VII. OPERATION

A. Preventive Maintenance

Preventive maintenance [1] consists of inspection and testing of equipment to detect failures that may be about to occur and to reduce their potential before they can develop into serious failures. A well-managed preventive maintenance program is necessary to maintain the integrity of a toxic chemical storage facility. Early detection and repair or replacement can significantly reduce the potential for a catastrophic failure. Selection of the proper inspection frequency may be determined by experience, or, for new facilities, from manufacturer's data. Some testing and inspection of equipment may be mandated by federal or state law, or by the insurance underwriter.

Preventive maintenance has been defined as the system for determining the probable frequency of failure of a device or system, and inspecting, repairing, or replacing it before it fails. Determination of the optimal preventive maintenance frequency is a difficult task. Historical failure rates can provide valuable information, but they must be used realizing that different service conditions may have a significant effect on failure rates.

The use of a standardized preventive maintenance system will help ensure that the proper results will be obtained and can be compared with historical records. Persistent problems that could result in serious complications can be uncovered by suitable documentation and analysis of data. An effective preventive maintenance program requires a staff with suitable qualifications. It is important to have detailed procedures and well-trained inspection personnel to ensure that the method is being applied properly and consistently.

To start a program, historical failure rate data should be determined and, for each piece of equipment, an appropriate maintenance strategy should be developed. Factors to consider include toxicity of material handled, quantity of material stored, corrosivity, failure rate history, and condition of equipment. Sometimes, historical failure rate data may be obtained from published sources.

After historical failure rate data have been obtained or estimated, the costs of alternative courses of action must be evaluated. Some courses of action may be

Test or inspect periodically (using vibration analysis for example), and take action based on results.
Perform preventive maintenance regularly, such as tightening belts, without previous testing.
Replace periodically without tests, such as pump seals, rupture disks, and hoses.

The simplest form of preventive maintenance is inspection. Inspection focuses on detection of small defects or changes before they result in catastrophic failures. Inspection methods can range from visual to the use of sophisticated instruments. The monitoring for corrosion is often the most important type of inspection, because a significant reduction in the strength of the vessel or line may occur before a leak develops, thereby allowing time to detect and repair this condition. Excessive vibration of lines can result in catastrophic line failures. High vibration frequently occurs in poorly supported lines. It is good practice to walk along lines to check for leaks. Leaks from underground pipelines can sometimes be detected visually by changes in adjacent vegetation or ground surface. An operator can perform many types of sensory inspection using a simple checklist. This may include inspection for leaks, inspection of hoses, and listening to sounds produced by a piece of equipment.

Each preventive maintenance activity should have a detailed written and approved procedure to help ensure the quality of the work. It should provide a document that can be reviewed and updated periodically. Long procedures should be condensed into checklists that can be used in the field. Suitable training must be provided for maintenance personnel and for operators. Positive material identification procedures can form a special part of any preventive maintenance program. Vendors sometimes ship the wrong material, so that without a positive material identification program improper materials of construction could be installed, risking catastrophic failure.

Once preventive maintenance methods have been selected, it is important to ensure that the required activities are conducted on schedule. Computers are well equipped to handle this type of activity, and much software is available for these applications. Findings should be documented to maintain a historical record.

Proper documentation and analysis of findings is a critical element of any effective preventive maintenance program. Adequate time and personnel should be allocated to this activity to help detect gradual changes in equipment and to repair and replace equipment before a catastrophic failure occurs.

B. Operating Procedures and Training

Operating procedures [1] describe the intended operation of the facilities in the form of detailed written information. This information is necessary to ensure that the equipment in a toxic chemical storage facility will be operated according to its design, in a safe and consistent fashion, by all operating personnel, and to minimize failures caused by human error.

Information that operating procedures should contain include the following:

Process description
Equipment description
Description of control system
Simplified block diagrams and process flowsheets with process control information
Detailed start-up instructions
Detailed normal operating instructions
Detailed shutdown instructions
Actual physical location of equipment
Preparation of equipment for maintenance
Operating data to be recorded
Emergency procedures
Potential hazards of chemicals handled
Safety equipment and regulations

These procedures should be presented in sufficient detail so that there is no confusion over which item of equipment is being discussed. They should describe operation of equipment according to design specifications and what action is required when operating parameters are outside normal limits.

Procedures are usually written for each major part of a process, and instructions are written for each major piece of equipment. It is helpful if a condensed version of the instructions and procedures is available as a checklist. Even in process computer-controlled plants, it is useful to keep some manual records, so the operator is aware of the status of critical variables. Logging of process conditions indicated on local instruments also helps ensure that operators periodically go out into the field.

For each piece of equipment, consideration should be given to responding to emergency conditions such as

Excursions in such process conditions as temperature, pressure, and flow
Loss of power, steam, air, water, or nitrogen inerting
Mechanical failure such as line failure, pump failure, seal failure
Overpressure resulting in functioning of relief valves or rupture disks
External events, such as fire, explosion, freezing, earthquake, high wind, toxic releases from nearby plants
Instrument failure

It is important to include operations and maintenance personnel in writing and reviewing operating procedures. By participating in developing the procedures they will be easier to understand, more complete, and these personnel will assume a more active role in promoting their use. Operating procedures should be reviewed and modified periodically. Outdated procedures should be removed and destroyed and operating and maintenance personnel instructed accordingly.

Training is essential to provide maintenance and operating personnel with the necessary information to operate and maintain the facilities safely. It is critical to the success of a training program that the people have the proper qualifications and aptitudes. Finding such people who will operate and maintain the facility will require the assistance of personnel, human resource groups, and occasionally trade unions. Well-written operating procedures can serve as a classroom-training guide. In addition to classroom instruction, a good training program should include a substantial amount of time in the field tracing lines, identifying equipment, and such. Individuals learn best if they follow instructions by doing the job themselves and recalling important points of the job as they proceed. Periodic refresher training should be established to ensure that operating and maintenance personnel maintain the skills necessary to conduct safe and efficient operations.

In addition to process training, all operating and maintenance personnel should be given basic safety training. Right–to–know legislation in the United States mandates training be given to all employees to inform them about the chemicals to which they may be exposed; OSHA 1910.19 also addresses this issue.

Procedures and training programs should be developed for contractors who work on-site, as well as, in some instances, for visitors.

VIII. AIR QUALITY REGULATORY ISSUES

Since the 1960s and 1970s, environmental issues and regulations have developed from matters of secondary interest on the part of business, to broad-ranging measures that affect the fundamental ways in which companies carry out the details of their business. The fast pace of development of environmental regulations and their changing, sometimes inconsistent, requirements, have made it difficult and expensive for companies to keep their facilities current. Out of need, many companies have adopted programs to keep them aware and abreast of continuing regulatory developments.

Although companies often fall under specific regulations pertaining only to their industry segment, a common thread running through a large number of manufacturing and commercial operations is the need to store materials considered to be toxic or hazardous. As a result, environmental regulations affecting the storage of toxic materials, either directly or indirectly, have had some of the most significant influences on companies throughout the world in terms of both cost and operations. Certainly, the Comprehensive Environmental Response, Compensation, and Liability Act of 1980, commonly known as Superfund, with its requirements to immediately report releases of reportable quantities of listed materials, has made the prevention of even minor spills, leaks, and releases from toxics storage an important concern for owners. Also, storage and disposal of hazardous wastes are strictly and extensively regulated under the Resource Conservation and Recovery Act (RCRA), as amended in 1984.

However, restrictions on industrial air emissions under the Clean Air Act (CAA), as amended in 1977, the Clean Air Act Amendments (CAAA) of 1990, and other state and local statutes and regulations have universal bearing on the storage of toxic materials, with direct and significant effects on the design and operation of toxic material storage facilities. Whereas the primary factors that once determined how air emissions from storage tanks were handled were fire protection and loss prevention, in recent years, environmental protection concerns nearly always determine the extent and nature of the required air emission controls that are installed.

There are many types of federal and state regulations to control air emissions from industrial facilities, of which toxic storage facilities are one example. Of the federal regulations, New Source Performance Standards (NSPS) affect new, modified, or reconstructed sources of air pollution only. The NSPS are developed by the EPA for conventional "criteria" air pollutants, such as volatile organic compounds (VOC) and oxides of nitrogen (NOx), as well as designated air pollutants from specific categories of new stationary emission sources (e.g., gas turbines, distillation operations, and others). Conversely, National Emission Standards for Hazardous Air Pollutants (NESHAP), also promulgated by the EPA, regulate emissions of specific-listed hazardous air pollutants from both new and existing specific emission sources [31].

The EPA has also developed permitting regulations intended to assure that new or modified sources do not cause air quality to deteriorate significantly in areas of the country that have attained the National Ambient Air Quality Standards (NAAQS). These permits, called prevention of significant deterioration (PSD) permits, are approved by state and federal permitting authorities upon provision of best available control technology (BACT) for the pollutant(s) of concern. In addition, states are required by the EPA to develop their own regulations for control of emissions from all sources, both new and existing, such that reasonably available control technology (RACT) is provided.

A. Volatile Organic Liquid Storage: New Source Performance

In the 1970s, the EPA began the process of establishing regulations on new sources of "criteria" air pollutant emissions under Section 111 of the Clean Air Act of 1970. Criteria pollutants are those for which a national ambient air quality standard (NAAQS) has been established. To date, the EPA has established NAAQS for only six pollutants: ozone (for which VOCs are the regulated precursor), oxides of nitrogen, sulfur dioxide, carbon monoxide, particulate matter smaller than 10 μm (PM10), and lead. The regulations established under Section 111 were termed new source performance standards (NSPS).

The intent of the NSPS regulations was to ensure the attainment of and continued compliance with the NAAQS by steadily bringing industrial emission control technology in practice up to the state of the art. As stated in the 1977 CAA amendments, the NSPS were to accomplish this by requiring "the best system of continuous emission reduction that EPA determines has been adequately demonstrated" on any source of a particular category if it was newly constructed or reconstructed, or modified in such a way as to increase its emissions. As old, existing sources wore out and needed to be replaced or rebuilt, they would become subject to an applicable NSPS and would be required to install up-to-date emission control technology.

Because of the lengthy promulgation process that has turned out to be involved with NSPS, by the time the standards are finally put into effect the actual control effectiveness requirements are sometimes already accepted as common practice. For these situations, the administrative requirements of monitoring, recordkeeping, and reporting that accompany the NSPS control requirements may actually be the most costly, time-consuming, and difficult provisions of the regulation.

Although the NSPS are primarily concerned with control of criteria pollutant emissions, they have a major bearing on the control of toxic air pollutants, because most toxic agents are also considered to be VOCs, a criteria air pollutant. As a result, the NSPS that are promulgated for control of VOC emissions can also result in reductions in emissions of toxic materials from the process units affected by the NSPS. On April 8, 1987, the Volatile Organic Liquid (VOL)

Storage Vessel NSPS, Subpart Kb of Part 60 in Title 40 of the Code of Federal Regulations (40 CFR 60.110b–117b), was promulgated to control VOC emissions from storage vessels [32]. This regulation has an important influence on the control of emissions of toxic compounds that are also VOCs.

1. Affected Facilities

The VOL storage NSPS applies to all storage vessels with capacities greater than or equal to 10,657 gal (40 m^3) that are used to store organic liquids and that were constructed, reconstructed, or modified after July 23, 1984. It does not apply to reactors, decanters, towers, or other vessels that may happen to contain organic liquids, but that are not principally intended to be used for storage purposes. Exemptions from all provisions of the regulation are provided for pressure vessels designed to run at more than 15 psig without emissions to the atmosphere, vessels permanently attached to mobile vehicles (tank trucks, railcars, barges, and such), vessels at bulk gasoline plants and service stations, and vessels used to store beverage alcohol. In addition, if the vessel is used to store organic agents that have been specifically exempted by USEPA from consideration as VOCs, it too is exempt from the VOL storage NSPS. However, the only compounds that have been exempted from the VOC definition to date are methane, ethane, 1,1,1-trichloroethane, methylene chloride, and certain chlorinated fluorocarbons (CFCs). Otherwise, any organic compound of carbon, regardless of vapor pressure, is considered to be a VOC and, hence, subject to regulation under the VOL storage NSPS. There is no minimal concentration stated in the regulation below which aqueous VOL solutions would be exempted from the regulation.

2. Control Requirements

Although the number of vessels subject to the NSPS is very large, based on the types of VOL stored, the control and documentation requirements for many vessels are minimal. Any storage vessels with volumes less than 10,657 gal (40 m^3) are not affected by the standard. In addition, for vessels between 10,657 and 19,813 gal (40 and 75 m^3), the only requirement is that records showing the dimensions of the vessel and an analysis showing the capacity of the vessel be maintained on file by the owner or operator for the life of the vessel. These two classes of vessels account for many of the VOL storage tanks in all segments of industry.

When the vessel volume equals or exceeds 19,813 gal (75 m^3), the regulation begins to require the use of specific emission control technologies or the achievement of specific control efficiencies, and varies the requirements based on the vapor pressure of the liquid being stored. Table 4, although not intended to provide an exhaustive or rigorous description of all of the provisions of the regulation, shows in general how the regulatory requirements vary with vessel volume and vapor pressure of the contents.

If an internal or external floating-roof tank is used to comply with the NSPS, it must meet certain design and installation requirements. For instance, the seal

Table 4 Guide to Volatile Organic Liquid Storage NSPS Control Requirements as a Function of Vessel Volume and Liquid Vapor Pressure

Vapor pressure (kPa)	Vessel design capacity (m^3)			
	$V < 40$	$40 \leq 75$	$75 \leq V < 151$	$V \geq 151$
$P_0 < 3.5$	None	Note 1	Note 1, 2	Note 1, 2
$3.5 \leq P_0 < 5.2$	None	Note 1	Note 1, 2	Notes 1–3
$5.2 \leq P_0 < 15.0$	None	Note 1	Note 1,2	Notes 1–4
$15.0 \leq P_0 < 27.6$	None	Note 1	Notes 1–3	Notes 1–4
$27.6 \leq P_0 < 76.6$	None	Note 1	Notes 1–4	Notes 1–4
P_0 ^{3} 76.6	None	Note 1	Notes 1, 2, 5	Notes 1, 2, 5

Notes:

1. Maintain records for the life of the tank showing the vessel dimensions and an analysis showing the vessel capacity [40 CFR 60.116b(b)].
2. For tanks storing materials of indeterminate or variable composition, the highest maximum true vapor pressure of the range of expected liquid compositions must be determined and the appropriate level of control required by the standard must be provided. If the highest maximum true vapor pressure is above the cutoff for monitoring, but below the cutoff for controls, a physical test of the vapor pressure must be performed initially and every 6 months after start-up [40 CFR 60.116b(f)].
3. Maintain for the current and the 2 immediately preceding years a record of the liquid stored, the period of storage, and the maximum true vapor pressure during that period. Excursions above the allowable maximum true vapor pressure (3.5 and 27.6 kPa) must be reported withint 30 days [40 CFE 60.116b(c), (d)]. Exemption from this requirement is provided if the requirements listed in note 5 are met.
4. Install one of the following:
   a. A fixed external roof in combination with an internal floating roof [40 CFR60.112b(a)(1)].
   b. An external floating roof [40 CFR 60.112b(a)(2)].
   c. A closed vent system and control device designed and operated to reduce inlet VOC emissions by 95% or greater [40 CFE 60.112b(a)(3)]. If this option is chosen, the records described in 3 above are not required.
   d. An alternative agency-approved system equivalent to a, b, or c [40 CFR 60.11b(a)(4)].
5. Install a closed vent system and control device designed and operated to reduce inlet VOC emissions by 95% or greater [40 CFR 60.112b(a)(4)].

between the floating roof and the sidewall of the vessel must be either a foam or liquid–filled seal around the entire circumference of the tank, a tandem double seal, or a mechanical shoe seal. Also, each opening in noncontact floating roofs needs to be equipped with a gasketed cover and a projection below the liquid surface to prevent the escape of vapors. Automatic bleeder vents and rim space vents must be gasketed and must open only under the proper conditions. Penetrations of the roof for sampling must be sample wells with slit fabric covers that cover at least 90% of the opening. Openings for roof support columns that penetrate the roof must be equipped with flexible seals or gasketed covers. Compliance with these and other requirements must be verified by initial and periodic inspections by the owner or operator and is subject to agency inspections.

We can see from Table 4 that, for vessels of appreciable size and for those storing materials with significant vapor pressures, it will often be necessary to install floating-roof tanks or 95% efficient control systems to satisfy the provisions of the NSPS. Since floating-roof tanks are many times not a viable choice for compliance because of sealing problems, design restrictions, or incompatible materials of construction, the 95%-efficient control device option is often chosen to comply with the NSPS.

Importantly, the NSPS specifies that for a control device to satisfy the standard, it must emit less than 5% of the VOC that enters the device. Occasionally, this may be a more stringent requirement than a 95% reduction in emissions from "uncontrolled" levels, since parameters, such as the volumetric flow rate of emissions from a vessel, may be influenced by the simple addition of a control device, and inlet VOC rates to the control device might be less than the uncontrolled VOC emission rates.

If a flare is used for a control device, the control efficiency must be demonstrated by testing with agency-approved protocols no later than 6 months after the initial start-up of the new or modified vessel (40 CFR 60.8). The testing must be conducted under conditions that are representative of the vessel's performance, likely including times when the vessel is being filled at its maximum rate and operating temperature. Flares also must comply with general requirements, such as smokeless operation, continuous pilot flame, and maximum exit velocity specifications, among others (40 CFR 60.18). If any control device other than a flare is used to comply with the 95% control efficiency requirement, it is exempt from the requirement for an initial performance verification. However, it must still comply with the monitoring provisions and operating plan described later.

Whatever type of control device is used to provide the 95% control efficiency, it must be equipped with a closed vent system to effectively contain the vent vapors to be treated with the device. The NSPS requires that the closed vent system must be tight enough that fugitive emissions from valves, sampling devices, open-ended lines, and connections do not exceed 500 ppm, as determined by measurement with an analyzer that meets the EPA requirements for fugitive emission testing [40 CFR 60.485(b)].

3. Monitoring, Recordkeeping, and Reporting Requirements

To demonstrate that the provisions of the NSPS are met, EPA requires that the owner or operator perform inspections of installed equipment and maintain records of the inspections and the results. Inspections required by the NSPS for floating-roof tanks include visual inspections of the roof and primary and secondary seals for defects or damage, such as detachment, holes, tears, snagging, or accumulation of liquid on top of internal roofs. These inspections must be conducted at initial start-up and annually after start-up, as well as each time the vessel is emptied and degassed. For external floating-roof tanks, primary seal gaps are to be measured at least once every 5 years, and secondary seals must be measured at least annually. Reports of inspection results and equipment defects found must be sent to regulatory authorities. Any defects or problems with the roofs that are found must be repaired within 45 days, or the vessel must be emptied and removed from service. At least 30 days before filling or refilling a vessel with a floating roof, regulatory authorities must be informed so that they may inspect the vessel if they wish.

As with all equipment subject to an NSPS, the EPA, or the agency with their delegated authority, must be notified within 30 days after the start of construction on a vessel subject to the VOL storage NSPS. They must also be notified of the anticipated date of start-up 30–60 days before that date, and the actual date of start-up within 15 days after that date. For NSPS vessels with floating roofs, a report describing the control equipment and certifying that it meets the specifications of the standard must be submitted, along with the notice to the agency that start-up has occurred. For NSPS vessels equipped with a closed vent system and 95%-efficient control device, an operating plan must be submitted to the agency, along with the construction start notification. This operating plan must include documentation that demonstrates that the control device will achieve the required control efficiency during maximum-loading conditions. In some states, the operating plan and agency approval of the plan may be required before the start of any construction or modification.

To ensure that the 95%-efficient control device will be maintained and operated in accordance with its design parameters, the NSPS requires that one or more operating parameters be monitored and recorded. A description of the parameters to be monitored, and an explanation of why those parameters are effective indicators of proper control device operation must be included in the operating plan required to be submitted.

As with many other regulations, failure of an owner to properly maintain required documentation or to submit reports is considered as much a violation of the standard as excessive emissions or failure to install or maintain control equipment. The absence of documentation indicating that the vessel has been operated in compliance with the standard usually suggests to the agency that the vessel was indeed not in compliance for the time period over which the documentation is missing.

B. Fugitive Emissions

Fugitive emissions are emissions to the atmosphere from process points not vented through a stack. Examples of fugitive emissions are those from pump seals, valve stems, pipe flanges, closed relief devices, and open-ended lines. They also include emissions from some area sources, such as landfills and piles of stored materials [31]. Although not exclusively a concern associated with the storage of toxic materials, fugitive emissions from valves, pumps, and piping associated with vessels are sometimes an important issue that needs to be addressed by owners and operators of storage tanks. In years past, with routine stack emissions from plants often in the range of hundreds of tons per year, fugitive emissions were not an issue, mainly because process emissions so often overshadowed them. Particularly in cases for which the emissions from the storage tank are very tightly controlled, as with toxic agents, fugitive emissions may now be as much as, or even many times greater than, routine stack emissions. Because there are often numerous potential fugitive emission sources in chemical processes, many small, individual sources can collectively add up to significant levels of total fugitive emissions.

Recognizing this, the EPA identified fugitive emissions from the synthetic organic chemicals manufacturing industry (SOCMI) as a top priority for control. Regulations such as the Subpart VV fugitive VOC NSPS (40 CFR 60.480–489) have required companies with SOCMI process units of substantial size to implement leak detection and repair programs (LDR or LDAR) to actively inspect and test for fugitive emissions from all valves, pumps, and flanges in VOC service within an affected process unit [32]. On the hazardous air pollutant front, the EPA has promulgated a generic NESHAP for fugitive emission sources, Subpart V (40 CFR 61.240–247), which requires leak detection and repair programs in process units of substantial size for all of the volatile future hazardous air pollutants (HAPs) that have been regulated [33]. Future hazardous air pollutants that are designated will likely require similar or more strict levels of control. As with other NSPS and NESHAP regulations, considerable recordkeeping and reporting requirements accompany the requirements to physically control the fugitive emissions. In addition, many states have implemented their own regulations requiring fugitive emission controls, either to address sources that EPA did not choose to regulate because they did not represent a broad enough concern nationwide, or to provide additional levels of control beyond those provided under federal regulation.

Fugitive emissions often occur as a result of leakage of process materials through leak paths in rotating seals and susceptible gasketed joints, such as those found in pipe flanges. When equipment is properly maintained, fugitive emissions from most conventional joints and sealing systems used in industry can be kept to a minimum. For VOCs, this is usually significantly less than 500 ppm, as measured at the leak path by a portable VOC analyzer specified in EPA reference method 21 (40 CFR 60, Appendix A, Method 21). However, for some sealing systems, such as packing glands on pump shafts in some services, the necessary maintenance frequency and potential risks of noncompliance have caused some companies to eliminate them from services when fugitive emissions are a concern and to use tighter-sealing systems, such as mechanical seals instead. In services for which entrained solids or fouling are not present to a notable extent and additional cost is justified, magnetic drive and canned-motor pumps, which have become more reliable and available in a wide variety of configurations and materials, are being used to virtually eliminate fugitive emissions from pumps. In services for which fugitive emissions are a concern, valves such as quarter turn, diaphragm seal, or bellows seal valves, which are less susceptible to leakage, are sometimes being used in place of gate or globe valves with packed stem seals. However, under many service conditions, high-cost equipment options are not necessary to comply with the provisions of fugitive emission regulations. Properly maintained packing glands or single mechanical seals on valves and pumps can often meet all emissions requirements. An informed choice should be made when specifying new valves and pumps, considering factors such as the type of service, accessibility for maintenance, cost, and the degree of emission reductions that may be achieved.

C. National Emission Standards for Hazardous Air Pollutants: Benzene Storage

Another key section of the Clean Air Act of 1970 that was a new provision at the time of promulgation is Section 112, which regulates listed hazardous air pollutants (HAPs). Listed hazardous air pollutants include carcinogens, mutagens, and toxicants that have been determined by EPA to pose a substantial risk to human health. Often, HAPs are not regulated by other parts of the Clean Air Act. Usually, HAPs are classified as such because of their carcinogenic potential, although compounds, such as chlorine and mercury, may be designated as HAPs because of acute toxicity or chronic noncarcinogenic toxic effects.

The HAPs are usually regulated through national emission standards for hazardous air pollutants (NESHAP), which apply to existing as well as new sources of designated HAPs in specific source categories. To satisfy legal requirements and to protect proposed standards from litigation, the EPA supports the development of NESHAP standards with voluminous amounts of data. The gathering and analysis of this data normally takes a great deal of agency effort, which means that the promulgation of a single NESHAP from identification to final rule usually takes years. This also means that the requirements of NESHAP standards are usually complex, difficult to understand, and necessitate keeping meticulous records. As with the NSPS standards, the administrative requirements of monitoring, recordkeeping, and reporting that accompany the NESHAP control requirements may actually be the most challenging provisions of the regulation to comply with, since the actual control practices that are required may already be accepted in common practice by the time the standards are finally promulgated.

Manufacture and use of benzene was originally regulated under a NESHAP in 1977 that addressed only fugitive emissions of benzene from valves, pumps, nonwelded connections, and open-ended lines. Emissions of benzene from process vents that did not qualify as fugitive emission sources were not directly covered by the standard. The agency intent was to promulgate additional NESHAP standards, in short order, that would cover benzene emissions from other specific source categories. However, this did not happen until 1990, when EPA promulgated NESHAP standards covering benzene waste operations, benzene transfer operations, and benzene storage vessels [33]. The NESHAP affecting benzene storage vessels contains provisions that are illustrative of the minimum levels of control that may be required for the storage of other toxic compounds designated as HAPs under future NESHAP standards to be developed under the newly revised Section 112 of the Clean Air Act Amendments of 1990. In fact, the regulations that will be promulgated to implement the Clean Air Act Amendments of 1990 will likely require, for many HAPs, even higher levels of control than are required under this NESHAP. The provisions of the National Emission Standard for Benzene Emissions from Benzene Storage Vessels are found in Subpart Y of Part 61 in Title 40 of the Code of Federal Regulations (40 CFR 61.270–277).

1. Affected Facilities

The benzene storage NESHAP applies to storage vessels of all sizes used to store benzene meeting the ASTM specifications for industrial grade benzene, refined benzene-485, refined benzene-535, or refined benzene-545. It does not apply to benzene storage vessels at coke by-product plants, pressure vessels designed to run at more than 15 psig without emissions to the atmosphere, and vessels permanently attached to mobile vehicles (tank trucks, railcars, barges, and such). If the vessel is also subject to the VOL storage NSPS, it must comply with the provisions of the standard with the more stringent requirements.

It is important to note that there is no minimal vessel volume stated in the regulation below which a benzene storage vessel would be exempted from the regulation. Although there are no control requirements for vessels smaller than 38 m^3 (10,000 gal), the owner or operator is still required, in a manner similar to that described in the VOL storage NSPS, to keep on file records showing the dimensions of the vessel and an analysis showing the capacity of the vessel as long as it remains in service. Presumably, these records are required even for vessels of only a few gallons.

2. Control Requirements

The control requirements set forth by the benzene storage NESHAP are actually quite straightforward. Any affected vessel with a design capacity larger than 10,000 gal must be equipped with one of the following:

a. A fixed roof in combination with an internal floating roof [40 CFR 61.271(a)]
b. An external floating roof [40 CFR 61.271(b)]

c. A closed vent system and control device designed and operated to reduce inlet benzene emissions by 95% or greater [40 CFR 61.271(c)].

The specific details of these requirements, particularly those for internal and external floating roofs, are virtually identical with those of the corresponding requirements in the VOL storage NSPS for vessels with capacities equal to or larger than 151 m^3 (39,890 gal) and maximum true vapor pressures greater than or equal to 26.3 mm Hg and less than 39.0 mm Hg. The monitoring, reporting, and recordkeeping requirements are also quite similar, but there are a few differences. For owners opting to comply by providing a control device with 95% or greater control efficiency, the 95% control efficiency is not required during periods of routine maintenance. However, the benzene level in the vessel may be lowered, but not raised during those routine maintenance periods, and the duration of the maintenance may not exceed 72 h. A maintenance plan describing the type, frequency, and duration of maintenance activities is to be submitted to the agency, along with the operating plan required to be submitted within 90 days after initial filling of the vessel.

The 95% control efficiency is also not required to be met during a control system malfunction, but it is important to note that the NESHAP specifically defines such a malfunction as "any sudden and unavoidable failure of air pollution control equipment." It specifically rules out any failure "caused entirely or in part by design deficiencies, poor maintenance, careless operation, or other preventable upset condition" from consideration as a malfunction [40 CFR 61.271(c)(4)].

In addition, since the NESHAP applied to existing sources as well as new sources at the time of promulgation, exemptions from a few minor requirements that would involve extensive retrofitting are provided for affected sources that were constructed before the date of proposal of the regulation, July 28, 1988. Also, compliance schedules were provided to specify the dates by which full compliance was required for already-existing sources.

D. Requirements of the Clean Air Act Amendments of 1990

The Clean Air Act Amendments of 1990 (CAAA) [34] implemented broad changes in the Clean Air Act, as amended in 1977. The primary focus of these changes was on three major areas of public concern: acid rain, urban air pollution, and toxic air emissions. Other provisions of the CAAA included the establishment of a national permitting program, a strengthened enforcement program, requirements for the phaseout of ozone-depleting chemicals, programs to address accidental releases of toxic air pollutants, and specific research and development priorities.

There is general agreement that the effects of the CAAA provisions will be far-reaching, affecting nearly every industry segment and even impinging on the lifestyles of the general public. Certainly, the handling and storage of toxic materials will be fundamentally affected by the regulations, which will be written based on the CAAA. The portions of the CAAA that will most directly affect the ways in which toxic materials are handled and stored are Title I, concerning nonattainment; Title III, concerning hazardous air pollutants; and Title V, concerning permitting requirements. However, since the regulations that will implement these titles have not been promulgated, or even proposed, as of this writing, we can only speculate on what the requirements of those regulations will be. The provisions of these titles are described in the following.

1. Title I: Nonattainment

Although regulations based on the Clean Air Act, as amended in 1977, have been responsible for significant improvements in national air quality, the urban air pollution problems of ozone (smog), carbon monoxide (CO), and particulate matter smaller than 10 μm (PM10) persisted throughout the 1970s and 1980s. As of 1990, most of the nation's largest cities were not complying with the NAAQS for ozone, and many were also out of compliance for carbon monoxide and PM10, mainly owing to the diversity and number of urban air pollution sources. One component of urban smog—hydrocarbons—comes from sources such as automobiles, petroleum refineries, chemical plants, dry cleaners, gasoline stations, house painting, and printing shops. Another key component, nitrogen oxides, comes from the combustion of fuel for transportation, utilities, and industries.

Although there are several reasons for continued high levels of ozone pollution, such as growth in the number of sources of VOCs and continued growth in automobile travel, perhaps the most telling reason is that the remaining sources of hydrocarbons are also the most difficult to control. These are the small sources—generally, those that emit less than 100 tons/year of hydrocarbons. These sources, such as auto body shops and dry cleaners, may individually emit less than 10 tons/year, but collectively emit many hundreds of tons of pollution.

When the air quality of a geographic area fails to comply with a NAAQS, the area is said to be in nonattainment for that pollutant. Title I of the CAAA specifies measures to address the problem of nonattainment in urban areas.

First, Title I divides nonattainment cities and geographic areas into five categories, with different compliance schedules, depending on the degree of the nonattainment problem to be resolved. The more serious the degree of nonattainment, the longer the area has in which to achieve attainment. For instance, areas that are only marginally in nonattainment have 3 years in which to comply, whereas areas that are in "extreme" nonattainment (such as the Los Angeles Basin) have 20 years in which to achieve attainment. Intermediate categories and schedules are provided for areas that are rated as moderate, serious, or severe. This extension of the time available in which to achieve attainment might seem unfair to mildly nonattaining areas, except that Title I states that the more serious the degree of nonattainment, the more severe are the control requirements that are mandated.

The most significant control requirement specified in Title I is a set of mandatory VOC emission reductions for ozone nonattainment areas. Moderate areas and those above this designation must achieve a 15% VOC reduction within 6 years of CAAA enactment, and serious areas and those above must average an additional 3% VOC reduction per year after the first 6 years until they reach attainment. There is the possibility, except for the extreme nonattainment cases, of areas obtaining exemptions from the percentage reduction requirements, if the reductions are shown to be technologically infeasible, but only if the area adopts control technology measures that are similar to those adopted in areas classified in the next higher category of nonattainment, and if the area adopts all feasible control measures in the first 6 years.

In addition to these reduction requirements, states with ozone nonattainment areas must revise their existing VOC control rules and programs to correct any deficiencies noted in the EPA interpretations. Each state must also promulgate new VOC control rules and programs based on existing EPA control technique guidelines (CTGs) for sources that the state has not yet acted on. Reasonably available control technology (RACT) must also be applied to smaller and smaller sources, as the degree of ozone nonattainment that is being dealt with becomes more and more severe.

If an area fails to implement programs and regulations to bring about the required improvements in air quality, after an 18-month grace period the EPA can impose sanctions on a state's federal highway funds and projects. The EPA could also impose a construction ban on projects causing significant VOC emissions, although no new construction bans are specifically called for in the CAAA. If EPA desires, within 2 years of a state's failure to develop an adequate state implementation plan (SIP) to bring about the required improvements in air quality, they may draft a federal implementation plan (FIP) to require the control measures that are needed for attainment. Even if a state lacks the resources or political consensus to promulgate the necessary regulations in the allotted time frame, EPA will impose a FIP that will likely be more stringent than the SIP that the state would have proposed. These measures are severe enough that few states will fail to follow through with plans to implement the required programs and regulations. Therefore, the VOC emission reductions called for in Title I of the CAAA will almost certainly come to pass.

As described earlier, even though Title I does not directly address toxic agents or mandate specific control techniques, its VOC reduction requirements will certainly affect emissions of toxic compounds that are also VOCs. In addition, for nonattainment areas in which growth in the number of sources will occur, the average reduction needed per source will be larger than 15%, if a 15% reduction in overall VOC emissions is to be realized. Since some sources will be more difficult to control than others, the required reductions could be quite substantial.

Control measures required by Title I regulations for vessels in nonattainment areas storing toxic VOC materials could be very similar to those described for the VOL storage NSPS and benzene storage NESHAP—a fixed roof with internal floating roof, an external floating roof, or a closed vent system, with a control device of specified reduction efficiency. Many different types of control devices could be chosen to accomplish the required reduction efficiency. However, if the NSPS requires these control measures only on new vessels, regulations based on Title I could require such measures on existing vessels, too, which would require potentially costly retrofitting.

2. Title III: Hazardous Air Pollutants

As described earlier, the promulgation of each NESHAP standard regulating a hazardous air pollutant (HAP) has taken years of agency effort to generate the volumes of data and information needed to substantiate the need for each standard and to identify the most appropriate methods of control. This has resulted in only seven compounds being regulated, from a potential list of hundreds. Reactions to information gathered under the Superfund "right-to-know" rule (Superfund Amendments and Reauthorization Act, or SARA, Section 313) highlighted concerns of environmental groups and the public over the relatively large quantities of potentially toxic compounds, termed air toxics, emitted nationwide. In response to these and other public concerns over emissions of air toxics, Congress included Title III on hazardous air pollutants in the CAAA of 1990 to speed the process of regulating HAPs.

One of the main provisions of Title III is the inclusion of a list of 189 compounds that Congress has stipulated as HAPs. In this one action, Congress eliminated the need for many years of agency work that would have been needed to substantiate the need for control of each of these compounds. In identifying this list of HAPs, Title III mandated reductions in emissions of the HAPs. The EPA must publish a list of source categories that emit certain levels of the listed HAPs within 1 year after passage of the new law. The list of source categories must include major sources emitting 10 tons/year of any one HAP or 25 tons/year of any combination of HAPs. Also, the list of source categories must include area sources composed of smaller sources, such as dry cleaners.

The EPA must then issue maximum achievable control technology (MACT) standards for each listed source category, according to a prescribed schedule. These standards are to be based on the best-demonstrated control technology or practices within the regulated industry. However, the definition of MACT does allow the use of cost versus benefits information in determining the level of control. For existing sources, MACT must be at least as stringent as the average control efficiency or best-controlled 12% of similar sources. This test excludes sources that have achieved lowest achievable emission rate (LAER) status within 18 months before proposal of the MACT standard or within 30 months before promulgation of the MACT standard. For new sources, MACT must be at least as stringent as the best-controlled similar source.

The EPA must issue MACT standards for 40 source categories plus coke ovens within 2 years of CAAA passage. The remaining source categories are to be controlled according to a schedule that implements all controls within 10 years: 25% of the remainder of the list of source categories within 4 years, an additional 25% within 7 years, and the final 50% within 10 years of enactment of the CAAA. Voluntary emission reductions by companies of listed HAPs, if they comply with certain conditions, can qualify the company for a 6-year extension from meeting the MACT requirements.

However, meeting the promulgated MACT standards may not accomplish sufficient HAP emission reductions to satisfy the requirements of Title III of the CAAA. Eight years after MACT standards are established for a source, EPA must examine the risk levels remaining at the regulated facilities within the listed source categories, determine whether additional controls beyond those required by MACT are necessary to reduce the residual health and environmental risks, and promulgate residual risk standards if necessary. These residual risk standards will be based on language in the Clean Air Act, as amended in 1977, that specifies that standards must achieve an "ample margin of safety." Costs will not be considered in setting the residual risk standards.

Standards to prevent accidental releases of toxic chemicals are also required under Title III. In addressing accidental releases, EPA must establish a list of at least 100 chemicals and threshold quantities. All facilities with these chemicals on site in excess of the threshold quantities would be subject to the standards, which would include hazard assessments and risk management plans. An independent chemical safety board is established to investigate major accidents, conduct research, and promulgate regulations for accidental release reporting.

3. Title V: Permitting

Under the Clean Air Act, as amended in 1977, federal permits were required only for major sources emitting significant quantities of criteria air pollutants. Under Title V of the CAAA, an operating permits program is introduced that is modeled after a similar program under the Federal National Pollution Elimination Discharge System (NPDES) covering water discharges. The purpose of the operating permits program is to ensure compliance with all applicable requirements of the Clean Air Act and to provide for enforcement of its provisions and standards. Air pollution sources subject to the program must obtain an operating permit, and states must develop and implement the program. In addition, EPA must issue permit program regulations, review each state's proposed program, and oversee the state's efforts to implement any approved program. The EPA must also develop and implement a federal permit program when a state fails to adopt and implement its own program.

The new Title V operating permit program clarifies air pollution control requirements for sources and makes those requirements more enforceable. Currently, the air pollution control requirements for a source may be specified in numerous state and federal regulations, which can be quite difficult to locate and compile, not only for the source owner, but also for state and federal regulators. The permit program will make it possible to consolidate all of a source's obligations relative to its air pollutants into one permit document. The program will also require the source to file periodic reports identifying the extent to which it has complied with those obligations. Both of these requirements will make it easier for federal and state agencies as well as source owners to evaluate the air quality compliance status of sources.

In addition, states will be able to administer significant portions of the Title III hazardous air pollutants program under federal oversight. Funds to help pay for the additional state workload caused by all titles of the CAAA will come from permit fee provisions included in Title V. These provisions will require all states to collect fees on an annual or other regular basis from permitted facilities "sufficient to cover all reasonable (direct and indirect) costs required to develop and administer the permit program requirements." Title V stipulates that in any case, the fees must be at least 25 dollars per ton of regulated pollutant emitted. Regulated pollutants include all of the criteria air pollutants as well as any pollutant covered under Section 111 or 112 of the act.

Under schedules laid out in Title V, EPA must issue operating permit program regulations within 1 year of CAAA enactment. Each state must then submit to EPA an operating permit program meeting the requirements of these regulations within 3 years of enactment. After receiving the state submittal, EPA has 1 year to accept or reject the program. The EPA must levy sanctions against a state that does not submit or enforce an operating permit program.

Title V operating permits will be required for major sources covered under Title I, as well as for sources covered by other titles of the act. Each operating permit must include all Clean Air Act requirements applicable to the source. Each permit must also include a schedule of compliance and applicable monitoring and reporting requirements. A single operating permit may be issued to a whole facility with multiple sources, rather than to each individual source at the facility and will be effective for a fixed term of up to 5 years. All facilities subject to the permit program must submit a complete permit application within 12 months of the effective date of the program. The state permitting authority must determine whether or not to approve each application and act to issue or deny the permit within 18 months of the date it receives the application.

The EPA has 45 days to review each permit and to object to permits that violate the Clean Air Act. If EPA fails to object to a permit that violates the act or the implementation plan, any person may petition EPA to object within 60 days following EPA's 45-day review period, and EPA must grant or deny the permit within 60 days. Judicial review of the EPA decision on a citizen's petition can occur in the federal court of appeals.

E. Permitting and Control Technology Requirements

Almost any process equipment or facility that emits air pollutants will need to obtain an air emission permit from the appropriate local, state, or federal governmental authority before construction or modification begins [31]. The application for the air emission permit generally must describe the pollutant-generating process to be installed or modified along with any emission control equipment or techniques, state the emission rates of all pollutants emitted, support the statement of emissions with a technical analysis or study, and describe the way that the process and control equipment will be operated to comply with regulatory requirements [31]. On occasion, the applicant must also demonstrate how the proposed process and emission controls will operate in compliance with applicable regulations, which may include atmospheric dispersion modeling.

In reviewing the permit application, the local, state, or federal permitting authority will normally evaluate the application for completeness, check the accuracy of calculations, analyze the stated emissions for compliance with applicable regulations and environmental acceptability, and review the previous compliance history of the source and source owner. After these tasks are completed, a set of permit conditions will be drafted to which the source owner must agree if the permit application is to be approved. The source must then operate within the bounds of the permit conditions to be considered in compliance with the permit. The source must still comply with all other air pollution laws, regulations, and ordinances, even if the permit conditions do not directly address them.

If the new or modified source is large enough, it will be considered a major source, subject to federal-permitting requirements and review. Collections of separate sources at the same geographic location are generally treated as a single source for the purpose of determining if they are large enough to require federal permitting. The process of evaluating air emission permit applications for these large sources which are subject to federal-permitting requirements is called new source review (NSR) and can be quite complicated, taking from 6 months to 4 years to complete. An NSR application would be required for a new source that could emit 100 tons/year or more of any criteria pollutant, after accounting for any air pollution control equipment. For an existing major source, if it is modified to increase its air emissions significantly (e.g., 40 tons/year for VOCs, sulfur dioxide, and nitrogen oxides, 15 tons/year for PM10, and 100 tons/year for carbon monoxide), then it too will be subject to new source review.

The specific requirements to complete the NSR process will vary depending on the source location and characteristics, the federal and state regulations that apply, the compliance status of the facility, if it is existing, and the nature of other sources in the area. However, an engineering study to determine the expected pollutant emission rates from the proposed source and to uphold the choice of control technologies will usually be needed in every case. In addition, atmospheric dispersion modeling is often necessary to determine the maximum off-site ambient air concentrations of the various pollutants that will be emitted by the proposed new source or modification. All of the information in a permit application will normally be open to public scrutiny, including the details of the engineering study, except for specific process details that can be shown by the applicant to be trade secrets or proprietary business information. However, nothing pertaining to the quality or quantity of air pollutant emissions can be claimed as proprietary.

The permitting requirements and procedures for a proposed NSR source are quite different, if the source is to be located in a nonattainment area for any of its major emitted pollutants, from if it is to be located in an attainment area. Often, a proposed source will be subject to nonattainment-permitting requirements for some of its pollutants, and attainment permitting requirements for other pollutants. This usually increases the complexity of the permit application for such a source.

1. Federal Permitting in Nonattainment Areas

If the source subject to NSR is to be located in an area that is nonattainment for any of the major pollutants that the source will emit, it will need to follow the federally approved state-permitting requirements for nonattainment areas of that pollutant. In most such circumstances, offsetting emission reductions at the same or other source locations in the area, at least equivalent to the allowed emission increases at the proposed source, must be provided. Usually, these reductions, called offsets, must be a set percentage (e.g., 10–50%) greater than the increases at the proposed source.

In addition, EPA requires states to require major sources proposed for nonattainment areas to provide the lowest achievable emission rate (LAER) for the pollutant for which the area is nonattainment. The *LAER* is defined as the lowest emission rate achieved in practice or required to be achieved *anywhere* for each particular source category, with no consideration given for costs or energy use. The only latitude allowed in disqualifying a practiced or required control technique as LAER is if it can be shown that the control technique is not feasible for technical or process reasons. The LAER is normally the most stringent control technology requirement that can be imposed.

2. Federal Permitting in Attainment Areas

If the source subject to NSR is to be located in an area that is attainment for any of the major pollutants that the source will emit, it will require federal permitting under the prevention of significant deterioration (PSD) rules. The purpose of the PSD rules is to ensure that air quality in areas attaining the NAAQS does not deteriorate significantly as a result of the installation of new sources or modifications. In other words, a new source is not allowed to pollute right up to the limit of the NAAQS—it is allowed to affect existing air quality only to a less-than-significant degree.

For the purpose of defining how much increase in ambient pollutant concentration is significant, EPA has established "PSD increments" that spell out the amount of increase in ambient concentration over an established "baseline concentration" that is allowed when new sources are installed in an area. The EPA has thus far established PSD increments for sulfur dioxide, particulate matter, and oxides of nitrogen. There have been no PSD increments established for carbon monoxide, lead, and VOCs (for ozone). Emissions of those pollutants must not cause a violation of the NAAQS.

In addition to meeting the PSD increments, a source located in an attainment area must also provide the best available control technology (BACT) on emissions of any major pollutant for which the area is attainment. The *BACT* is defined as

> an emission limitation based on the maximum degree of reduction of each pollutant . . . emitted from or which results from any major emitting facility, which the permitting authority, on a case-by-case basis, taking into account energy, environmental, and economic impacts and other costs, determines is achievable for such facility through application of production processes and available methods, systems, and techniques . . . for control of each such pollutant" [1977 CAA Amendments].

For a control technique to be disqualified as BACT, it must be shown to be either not as effective as another technique or not achievable from an energy, environmental, or economic standpoint. Energy considerations that might prove a technique to be not achievable could be inordinately high power or fuel consumption for the amount of pollutant reduced. An example of an environmental impact that could eliminate a control technology from consideration as BACT is the generation and emission of other pollutants with higher toxicities or in larger quantities than the pollutants that are being reduced. Economic effects that could eliminate a control technology are usually capital and operating costs that are disproportionately high compared with the emission reductions or environmental benefits that would be achieved. A BACT demonstration accompanying an application for a PSD permit must consider all control technologies that could technically be applied to an eligible emission and select the one that is most effective at reducing emissions of the regulated pollutant unless it can be shown to be not achievable according to the foregoing criteria.

IX. AIR EMISSION CONTROL TECHNIQUES

There are many different methods of controlling air emissions from toxic material storage vessels. The choice of the proper control equipment for a particular storage application will depend on factors such as the nature of the material being stored, the effectiveness of control required, the type of storage vessel in the case of existing installations, the cost of control equipment, availability of equipment in the required materials of construction, and reliability of controls. For example, the type of control technology chosen to control emissions of a material with high toxicity and high vapor pressure would likely be quite different from that chosen to control emissions of a relatively low-toxicity, low vapor pressure material.

Emission control equipment is usually classified into two main categories: passive controls and active controls. Passive controls are those that prevent or reduce the generation or release of emissions. Some examples of passive controls are floating-roof tanks, vapor-balancing systems, pressure vessels, and conservation vents. Active controls are those that remove, recover, or destroy emissions once they are generated. Some examples of active control equipment are vent condensers, afterburners, scrubbers, and adsorbers. The advantages and disadvantages of the various types of emission controls will be discussed, along with some general criteria to be considered during the selection process.

A. Closed Pressure Vessels

Perhaps the most straightforward and effective method of air emission control for the storage of toxic materials is to provide a closed storage vessel, with a pressure rating high enough to fully contain the vapors generated on filling the vessel. This passive control method is particularly appropriate with materials for which vapor pressure is above ambient pressure. For these substances, the composition of the vapor space inside the vessel is almost entirely the material being stored, although noncondensibles present initially must usually be either evacuated before filling or purged during the initial filling. Because the vapor pressure of the liquid inside the pressure vessel will be above atmospheric, once noncondensibles are eliminated, they do not leak in again. As more liquid is added to the vessel, the vapors are merely compressed and condensed at the storage temperature, and the volume of the vapor space shrinks. As a result, for a material with vapor pressures above ambient pressure, the tank internal pressure varies mainly with the temperature of the contents, not the liquid level inside the tank.

Closed pressure vessels may also be used to store materials with vapor pressures below atmospheric, but here, the composition of the vapor space inside the vessel is usually a mixture of the material being stored and noncondensibles, usually air. The noncondensibles can be excluded by evacuating the vessel before initial filling, but there will be a tendency for air to slowly leak back into the vessel through seals and gasketed joints over time, since the internal vessel pressure would always be below atmospheric. As the vessel is filled with liquid, the vapor in the headspace once again is compressed and condensed, but because of the presence of the noncondensibles, the tank internal pressure rises as the liquid level rises, even with the liquid contents at constant temperature. The tank internal pressure does not rise as quickly as the ideal gas law would predict, however, since the partial pressure in the vapor of the components making up the liquid remains relatively constant, and some limited condensation of the vapor does occur. However, this pressure rise on filling can be taken into account during vessel design, by providing some extra vessel volume to contain the noncondensibles and by designing the vessel with a high enough pressure rating to contain the noncondensibles without venting.

The advantages of closed pressure vessels to control air emissions include the ability to handle highly volatility materials with excellent control efficiencies and minimal emissions, as long as care is taken to assure that leaks and fugitive emissions are minimized through the use of gaskets, joints, and seals of good integrity. Other advantages include low operating and maintenance costs and simplicity of operation and control. Disadvantages include high capital costs for large pressure vessels or those requiring expensive alloys as materials of construction owing to corrosivity of the contents. Also, filling pumps must be designed with adequate discharge pressure to overcome the internal pressure when the vessel is nearly full. It is important to note, however, that for small process storage vessels (about 10,000 gal or less) using standard-sized dished heads, the capital cost of a pressure vessel is often less than that of an API storage tank of equal capacity, since the increased field fabrication costs of the API tank can overwhelm the increased material costs of the pressure vessel.

B. Conservation Vents

Conservation vents, a type of pressure–vacuum relief valve (PVRV), can be installed on pressure vessels that do not have design pressures high enough to totally contain the vapors generated during filling. Conservation vents are different from the relief valves that are installed on pressure vessels to protect against excessive pressures or vacuums generated under emergency or upset conditions. Conservation vents are designed to discharge vapors from and allow air to enter the vessel at pressures above and below ambient during normal operations and, therefore, open routinely. Usually, vessels equipped with a conservation vent are also equipped with one or more relief valves exclusively for emergency operation.

Conservation vents are widely used on fixed-roof API storage tanks, which usually can only contain a few inches of water pressure or vacuum. Without a conservation vent, emissions can occur from the tank because of wind loads either flexing the sides and roof of the tank or blowing into the open vent and causing mixing in the tank headspace between ambient air and the vapors above the liquid in the tank. Conservation vents typically eliminate these emission contributions and limit air emissions from the tank to working (filling) losses and breathing losses due to diurnal temperature changes.

If the storage vessel is capable of holding more than a few inches of water pressure, then, depending on the vapor pressure of the material being stored, the conservation vent set pressure may be able to be raised to the point where breathing losses are eliminated and only working (filling) losses remain. The following equation gives a theoretical estimate of the conservation vent set pressure, P_2, required to prevent breathing losses [35]:

$$P_2 = 1.1\ (P_a + P_1 - p_1) - (P_a - p_2)$$

where

P_2 = gauge pressure (psig) at which conservation vent pressure relief opens.
P_a = atmospheric pressure (psia).
P_1 = gauge pressure (psig) at which conservation vent vacuum relief opens.
p_1 = true vapor pressure (psia) at a 32.2°C (90°F) minimum liquid surface temperature.
p_2 = true vapor pressure (psia) at a 37.8°C (100°F) maximum liquid surface temperature.

This equation is applicable only when the vapor pressure at the minimum liquid surface temperature, P_1, is less than the absolute pressure, $(P_1 + P_a)$, at which the conservation vent vacuum relief opens. Pressure settings of about 2.5 psig have been quoted as being required to eliminate breathing emissions from gasoline storage vessels, depending on the volatility of the gasoline. However, even if the storage tank is not rated for a high enough pressure to allow the elimination of breathing emissions, a good portion may still be eliminated by setting the conservation vent as far above atmospheric pressure as possible. For gasoline, setting the conservation vent at 25% of the setting needed to totally eliminate breathing losses will reduce the breathing losses by roughly 50%.

The advantage of using conservation vents is that they are quite inexpensive to purchase, install, and operate. However, for many toxic materials stored in existing vessels with low pressure ratings, they are unable to achieve a low enough emission rate to satisfy regulatory requirements. As a result, many times conservation vents are used in conjunction with other control techniques to achieve adequate control efficiencies.

C. Vapor-Balancing Systems

Vapor-balancing or vapor return systems are a type of passive control normally used to control emissions during transfers between tanks or between storage and delivery vessels. A vapor-balancing system consists of piping the vent from the tank being filled into the vent of the tank being emptied. As the destination vessel is filled, the vapors that are displaced by liquid are returned to the originating vessel to take the place of the discharged liquid. In this manner, there are no net atmospheric emissions caused by filling, since the vapors displaced are equal in volume to the liquid displaced. However, a vapor-balancing system will not directly control tank breathing losses, since they result from diurnal temperature changes, which cause a net increase in overall system volume. However, if a vapor-balancing system is coupled with the use of an appropriately sized and set conservation vent, both filling and breathing losses can be virtually eliminated.

Vapor-balancing systems are most effective on vessels that can hold at least 1 psig of pressure, since pressure surges and drops through vent lines can result in some backpressure being generated in the vessel being filled. Without sufficient pressure-holding capability in the vessels being filled and emptied, the conservation vents or emergency relief vents may frequently be lifted, causing a loss in emission control efficiency. When the distance between vessels is large, more than a few hundred feet, for example, the pressure drop through the vent line connecting the vessels may become several psi. And, if the vent line run between the vessels contains low points, the pressure drop may become even higher owing to vent liquids condensing out, collecting in the low points, and forming a seal leg in the vent piping, which must be lifted if vapor is to pass. These factors may require that the vessels in the vapor-balancing system be rated for several psig.

Vapor-balancing systems have the advantages of low capital and operating costs, low maintenance, and ease of operation. They can be very effective at controlling emissions if the system is properly designed and sized. Disadvantages include increased capital costs when vessels are separated by large distances, requiring long vent pipe runs of large diameters to keep pressure drops down, a tendency to plug when vessels holding high freeze point materials are linked together, and the risk of cross-contamination if vents from vessels containing high-purity material are connected with those from vessels containing waste materials or lower-purity products.

D. Compressor Transfer Systems

A special type of vapor-balancing system is the compressor transfer system used to unload the contents of a delivery vessel into a storage tank, load a delivery vessel from a storage tank, or to transfer contents from one stationary vessel to another. In this type of system, the vent lines of the two vessels are connected together, as in a vapor-balancing system, but a gas compressor is installed in the vent line to actively pump vent vapors and cause liquid to be pressure transferred from one vessel to the other. Although this type of system can be used to either load or unload delivery vessels, compressor systems are more often used to unload delivery vessels. This is because delivery vessels often have higher pressure ratings than large-volume storage vessels, which allows the compressor to build up more pressure in the delivery vessel than would be allowed in the storage vessel, resulting in higher unloading flow rates than could be achieved during loading.

Compressor transfer systems are often used to unload railcars of highly volatile or compressed liquids. With a conventional pumped rail car unloading system, as the rail car is emptied, the pressure inside the rail car decreases. Since the liquid and vapor inside the rail car are usually in equilibrium at the beginning of the transfer, this decrease in pressure causes the bubble point of the liquid being transferred to decrease below the liquid temperature, and vaporization or boiling occurs within the rail car. In some instances, this decrease in bubble point may be enough to cause cavitation problems or even vapor locking in the transfer pump, particularly when the rail car must be unloaded through an internal dippipe. Operating personnel usually resolve this problem by applying nitrogen pressure to the rail car, which results in the elevation of the liquid bubble point and usually eliminates the cavitation problem. However, it also leaves residual pressure inside the rail car at the end of the transfer, which must be vented, either at the customer's or the vendor's plant, before the rail car can be reloaded. Regulations usually require a pollution control device to abate these emissions. With a compressor unloading system, these problems are avoided, since there is normally no pump in the system to cavitate.

Compressor transfer systems often have the advantage of relatively low capital cost, since the cost of the compressor is at least partially offset by the elimination of the need for a liquid transfer pump. However, maintenance costs are often higher on gas compressors than on pumps, depending on the compressor design. In addition, for systems handling highly corrosive materials, the necessary materials of construction for a compressor may make its initial cost quite high, or even make it infeasible if compressors are not available in the particular material that is required. If monomer vapors need to be handled, a compressor transfer system may be infeasible because of the potential for formation of polymer inside the compressor and the resulting need for frequent expensive maintenance. In spite of these potential drawbacks, compressor transfer systems are usually highly effective at preventing air emissions, as long as care is taken to assure that leaks and fugitive emissions are minimized through the use of gaskets, joints, and seals of good integrity.

E. Refrigerated Storage

One of the most important factors affecting the quantity of atmospheric emissions from a storage vessel is the vapor pressure of the material being stored. For materials that are stored in the liquid state in fixed-roof vessels with open vents or conservation vents with set points close to ambient pressure, the emissions during filling are directly proportional to the liquid vapor pressure. Since, for most practical purposes, the logarithm of liquid vapor pressure varies almost directly with the reciprocal of the liquid absolute temperature, the vapor pressure of a vessel's contents will drop quickly as the storage temperature decreases. As a result, a very straightforward passive control method to reduce storage vessel emissions is to reduce the liquid vapor pressure by refrigerating the vessel contents.

Refrigeration of a storage vessel can be accomplished by various methods. The storage vessel may be equipped with a liquid-filled jacket through which refrigerated heat transfer fluid may be circulated. For vessels lacking an integral jacket, panel-type heat exchangers may be clamped to the outside surface of the storage vessel to serve the same purpose as a jacket. However, the heat transfer coefficients that are normally achieved with either jackets or clamp-on panel-type heat exchangers are quite low. To reduce the required heat transfer area and increase the available cooling capacity, vessels are sometimes equipped with either internal cooling coils or a cooled external shell and tube heat exchanger through which the vessel contents are continuously recirculated.

For reactive or thermally sensitive materials, such as monomers, refrigerating the contents of a storage vessel to reduce air emissions may have the added advantage of reducing the potential for polymerization or other reactions of the vessel contents. In fact, some cooling of the vessel may already be necessary for processing reasons. In these situations, the incremental cost of further reducing the temperature of the cooling for control of air emissions may be relatively small. However, frequently, the cost of installing the required heat transfer area, an appropriately sized refrigeration system, and the full vessel insulation needed to maintain storage temperatures well below ambient can be greater than the cost of installing other add-on emission controls. In addition, the freeze point of the liquid contents of a vessel may be high enough or the required level of emissions may be low enough to render vessel refrigeration infeasible as the sole emission control technique. Other properties of the liquid being stored such as high viscosity or severe fouling tendencies may also rule out vessel refrigeration.

F. Vent Condensers

An active control technique that is very similar in principle to refrigeration of the contents of a vessel is to condense the vapors vented from the vessel. Rather than cooling the entire contents of a vessel to reduce the quantity of emissions generated, the vapors that are generated at normal vessel operating temperatures are routed through a condenser before venting to the atmosphere. This almost always results in a lower cooling duty and required heat transfer area than does refrigerating the contents of a storage vessel.

Vent condensers are one of the most widely used types of add-on emission control devices because of their simplicity, ease of operation, and relatively low cost. In many process applications, they may even be required for purposes of economy, when vapor losses from the process would be too high without recovery and recycle using condensation. As a result, vent condensers are often used in conjunction with other add-on emission controls to pretreat vents to reduce the load on a final vent treatment device.

The cooling medium that is used most frequently in vent condensers is cooling water, either single-pass from the water supply source or closed-loop from a cooling tower with a small fresh makeup stream. When low-boiling point materials are being handled, or when there are significant quantities of noncondensibles in the vent gas owing to instrument bubblers or a vessel blanketing system (cases where the vapor dew points would be low), refrigeration may be required to achieve desired levels of control [36].

It should be noted that the design conditions for a vent condenser are critical for proper operation of the unit. When there are widely varying vent loads, the peak condensing duty as well as the peak quantity of vent gas to be treated should be evaluated to see which one poses the more demanding condenser design.

As mentioned earlier, vent condensers have advantages of simplicity and relatively low capital and operating costs over other control techniques. They also can control a broad range of emissions simultaneously, being restricted only by the vapor pressure of the volatile to be controlled at the temperature of the cooling medium to be used. Material condensed out, particularly from storage vessels, is usually free enough of contaminants and in a state such that it may be readily recycled to the process or storage vessel from which it originated. Disadvantages of vent condensers include, in many cases, relatively low control efficiencies limited by the vapor pressure of the volatile to be controlled and the concentration of noncondensibles in the vent stream. Also, if the volatile being condensed has a high freezing point, the minimum condenser temperature may be limited which, in turn, limits the control efficiency that can be achieved. In addition, for monomers with nonvolatile polymerization inhibitor systems, condensed monomer liquid may be deficient enough in inhibitor concentration so that polymer may form in the condenser. This may result in the need for frequent cleaning of the condenser, or even total replacement, on occasion.

G. Absorbers and Scrubbers

Absorbers, commonly called vent scrubbers, are often used as an active control technique when a liquid is available in which the pollutant to be controlled is either highly soluble or reactive. Water is by far the most frequent scrubbing liquid and is used to control emissions of acid gases, soluble organics such as alcohols, and both soluble and insoluble particulate matter. However, other scrubbing media may be used where appropriate, such as oil to absorb hydrocarbon vapors, which would not be soluble in water. In addition, sometimes a process solvent or abundant raw material may be used as a scrubbing liquid when the component to be absorbed can be returned to the process for reuse.

The flow of scrubbing liquid through the absorber may be either recirculated, during which the bulk of the liquid exiting the absorber is returned to its inlet with some fresh liquid makeup, or single-pass, for which only fresh scrubbing liquid is fed to the absorber and none of the liquid exiting is returned to its inlet. When the volatile is reactive with the scrubbing liquid, such as ethylene oxide with water, absorption is enhanced, since pollutant concentrations in the liquid phase are kept low owing to the reaction. In a reactive scrubber, how low the liquid concentration actually runs at steady state within the absorber depends on the relation between the reaction kinetics and the rate of mass transfer in the scrubber. It is important to remember that just because one component in a vent gas is reactive with the scrubbing liquid and can be effectively treated does not mean that all components in the vent gas will be removed efficiently. For example, a recirculated caustic scrubber that is very efficient at removing hydrochloric acid fumes will likely not be very efficient at absorbing toluene out of the same vent gas.

One factor that must be dealt with in every absorber is the disposition of the spent or rich scrubbing liquid exiting the absorber. If the scrubbing liquid is water and the absorbed pollutant is biotreatable, it may be appropriate to discharge the stream to either an on-site waste water treatment plant or a publicly owned treatment works (POTW). However, discharge may not be feasible or allowable with many toxic materials because of sensitivity of the treatment plant biomass or toxicity of the material to fish or aquatic wildlife. In these cases, the spent scrubbing liquid must either be neutralized, recycled, treated, or disposed of by other means.

One possible process solution to the problem of the fate of the scrubbing liquid is to strip the absorbed pollutant out of the rich scrubbing liquid in a separate device and return the renewed "lean" scrubbing liquid back to the inlet of the absorber. In this manner, the scrubbing liquid can pass from absorber to stripper and back again in a closed loop, and the only fresh liquid makeup added is that needed to replace liquid lost by evaporation in the absorber. The collected pollutant is taken off of the stripper in a more concentrated stream than in the relatively dilute spent scrubbing liquid and can potentially be recycled to the originating process for reuse. This configuration of absorber and stripper in a closed loop is particularly attractive when a nonaqueous scrubbing liquid, such as an oil, is used, and regeneration and reuse of the liquid becomes necessary because of expense and difficulty in disposing of the spent liquid and providing fresh makeup.

Several different types of absorbers and scrubbers are used in industry today. They may be classified into three main categories: towers, venturis, and quench tanks. Furthermore, absorption towers may contain either randomly dumped or structured packing materials, a variety of plates or trays, or arrays of spray nozzles, to provide intimate contact between the vapors to be scrubbed and the scrubbing liquid.

1. Absorption Towers

In an absorption tower, the vent gas to be scrubbed enters at the bottom of the tower, and the scrubbing liquid enters at the top of the tower. The gas and the liquid pass through the tower in countercurrent flow, and gas–liquid contact is provided with either packing, trays, or liquid sprays. Relatively high concentrations of volatile in the gas are transferred into the relatively clean scrubbing liquid by diffusion across the gas–liquid interface. Clean gas exits at the top of the tower and spent or rich scrubbing liquid exits at the bottom of the tower. Absorption towers are typically used when high control efficiencies are needed, because of their ability to deliver multiple stages of countercurrent contact. Because of their multiple contact stages, towers frequently do not require as much scrubbing liquid per unit of gas treated as do other types of absorbers. They have the added advantage of a lower pressure drop than some types of venturi scrubbers, particularly packed and spray towers. However, spray towers usually do not deliver control efficiencies as high as those in packed or trayed towers, because of short contact times and backmixing of gas. Spray towers also have a tendency to generate significant quantities of mist, which must be controlled with a mist eliminator.

2. Venturi Scrubbers

In a venturi scrubber, the necessary interphase contact is achieved in either of two ways: by injecting the liquid into the gas as it passes through the venturi, or by admitting the gas to the liquid stream as it passes through the venturi (liquid jet eductors). The region of high turbulence in the venturi throat provides very intimate mixing of gas and liquid, which encourages mass transfer. The exit of the venturi discharges the gas–liquid mixture into a separation chamber, such as a tank or a cyclone, where the two phases are allowed to disengage. Venturi scrubbers are often used when particulate removal is desired or, sometimes, when limited space is available for installation. They also can deliver good control efficiencies in reactive systems when reaction rates are relatively high. However, they have limited control efficiencies in equilibrium-limited systems and can have quite high pumping requirements, particularly for liquid eductors.

3. Quench Tanks

In a quench tank [37], the gas containing the pollutant to be absorbed is simply injected or sparged into a vessel containing the scrubbing liquid through a perforated pipe, sparger, or some other type of disperser. Unless the size of the bubbles that are created is sufficiently small, the amount of mass transfer area available is inadequate to provide good control efficiencies. However, if the perforated pipe or sparger is designed to create small bubbles, the power needed to force the gas into the liquid is usually quite high. In fact, the pressure drop needed to overcome the head of scrubbing liquid above the sparger alone is usually higher than in other types of scrubbers. Quench tanks are quite efficient when the gas is almost entirely made up of condensibles, and the scrubbing liquid in the tank is cold relative to the gas being scrubbed. However, with high concentrations of noncondensibles, mass transfer becomes more important than heat transfer, and control efficiencies often are reduced significantly, sometimes to well below 50%. If the quench tank contents are well mixed, often only a single theoretical stage or mass transfer unit of contact can be realized.

H. Carbon Beds and Adsorbers

An adsorber is an active control device in which vent gas containing one or more volatiles is passed through an adsorbent bed, which preferentially adsorbs the volatile or volatiles, rather than the other components of the vent gas. When the concentration of the volatiles adsorbed in the bed becomes so high that insufficient control efficiency is obtained, the adsorbent bed is either replaced with fresh adsorbent or regenerated in place by desorbing the adsorbed volatiles. Spent adsorbent beds may be regenerated by either raising the bed temperature, decreasing the bed pressure, purging the bed with a low-concentration gas, or a combination of these methods. The desorbed volatiles are normally captured and collected for recycling, reuse, or disposal by condensation or another capture technique.

An important factor for efficient adsorber operation is the establishment of plug flow of the vent gas through the bed. If the vent gas flows through one area of the bed preferentially, the adsorbent solids in that area will become saturated with volatiles early, bed capacity will be reduced, and volatile breakthrough will occur before the entire bed is ready to be regenerated. To help establish plug flow, attempts are usually made to distribute the inlet vent gas across the entire cross-sectional area of the bed. This may be done by supporting the adsorbent bed with an evenly perforated plate or introducing the vent gas into the adsorber vessel through a gas distribution header.

A variety of techniques are used to refresh the adsorbent bed after saturation with pollutants. When the adsorbent bed is replaced with fresh material after it becomes exhausted, the spent adsorbent is often returned to the manufacturer for reactivation. This has the advantage of simplicity of operation for the user, who does not have to invest the capital or operating expense for a regeneration system, but has the disadvantage of being rather costly on a mass of adsorbent basis.

When the spent adsorbent bed is regenerated in place, thermal regeneration is the most common. During thermal regeneration of an adsorbent bed, steam is usually passed through the bed, instead of vent gas, and causes the adsorbed volatiles to desorb back into the gas phase. The volatile-laden steam is then condensed as it exits the adsorbent bed, and the recovered material is either returned to the originating process or disposed of. During pressure regeneration of an adsorbent bed, a vacuum is usually pulled on the spent adsorbent, and a small amount of clean purge gas is often allowed to pass through the bed, again causing volatiles to desorb back into the gas phase [38]. The low-pressure gas exiting the bed is compressed as it passes through the vacuum system. At ambient pressure, the rich vent gas is also condensed, and any recovered volatiles are either reused or disposed of. A combination of thermal and pressure regeneration may occasionally be used to carry out the adsorbent regeneration. Thermal regeneration has the advantage of lower capital cost, since no vacuum system is needed, but pressure regeneration has the advantage of lower energy costs, since it is not necessary to generate steam to carry out the regeneration.

Another regeneration option that is often well-suited to control of emissions from storage vessels is fresh air regeneration. In this situation, the vent from the storage vessel is piped into a canister containing an adsorbent bed. As the storage vessel is filled with liquid, rich vent vapors pass through the bed, where volatiles are adsorbed before discharge of the vent gas to the atmosphere. Then, as the vessel is emptied, fresh air is simply allowed to purge back through the adsorbent bed, causing a portion of the adsorbed volatiles to desorb back into the gas phase, which discharges back into the closed head space of the storage vessel. It is not necessary to apply any heat to assist in the desorption process [39]. This regeneration method has the advantage of very low capital and operating costs compared with other adsorbent regeneration systems, although the control efficiencies that can be achieved are usually lower than those with adsorbent beds using other regeneration methods.

By far the most common adsorbent that is used in adsorption emission control systems is activated carbon. Carbon is fairly inexpensive, available from a wide variety of vendors, and is quite effective at adsorbing many types of hydrocarbons and organic chemicals. In addition, much work has been done by vendors and in academia to characterize the adsorption performance of different types of activated carbon. However, alternative adsorbents such as ion-exchange resins, activated alumina, silica gel, molecular sieves, or polymer beads may result in better control efficiencies on specific pollutants, although their cost is typically higher than that of carbon. In addition, alternative adsorbents may be less subject to poisoning than activated carbon, which can have a tendency to lose its adsorptive capacity with successive regenerations over time.

I. Combustion Devices: Afterburners

Combustion devices, commonly called afterburners, have become more popular for air pollution control in recent years as a result of regulatory pressures to achieve very low levels of emissions for a broad range of pollutants. When the compounds to be controlled in a vent stream represent a wide range of chemical families, vapor pressures, and characteristics and need to be reduced by factors of more than a 1000-fold, afterburners have little competition from other control techniques. When a noncombustible pollutant must also be controlled, afterburners may be preceded or followed by a supplemental control device, such as a water or caustic scrubber.

1. Direct-Fired Afterburners

Several types of afterburners have been developed to control a wide range of vent streams. A common type is the simple direct-fired afterburner in which a self-supporting flame is ignited from fuel flowing through one or more gas burners in a refractory-lined combustion chamber that discharges into a vent stack. Depending on its fuel value and oxygen content, the vent stream to be burned may be introduced as a fuel gas, with the burner combustion air, or as a separate gas stream that is mixed with the burner flame in the combustion chamber. The destruction efficiency of the direct-fired afterburner is largely determined by the temperature and retention time of the combustion gases in the combustion chamber [40]. With adequate temperatures and retention times, destruction efficiencies in excess of 99.99% have been achieved in direct-fired afterburners, even on hard-to-burn compounds, such as highly halogenated hydrocarbons. However, because significant quantities of support fuel may be needed to maintain high combustion temperatures, particularly with dilute vent gas streams with low fuel values, the operating costs of simple direct-fired afterburners can often be higher than those associated with other combustion devices or control techniques.

2. Recuperative Furnaces

One common method that is used to reduce the support fuel requirements of a simple direct-fired afterburner is the installation of a heat exchanger on the inlet to the afterburner to preheat the combustion air and vent gas to be burned with hot exhaust gases from the combustion chamber before they are discharged to the atmosphere. This type of afterburner is often referred to as a recuperative furnace. In practice, up to 70% of the heat in the combustion chamber exhaust gases can be recovered into the gas entering the combustion chamber [41]. As a result, recuperative furnaces generally have significantly lower fuel costs than simple direct-fired afterburners because of the reduced heat input needed to bring the vent gases up to combustion temperatures. However, because of the additional heat exchange equipment involved, the capital costs are higher for recuperative furnaces. Since their combustion chambers can operate at temperatures and retention times similar to those in simple direct-fired afterburners, high destruction efficiencies are also achieved in recuperative furnaces.

3. Boilers and Heaters

Another method of recovering heat from a direct-fired afterburner is to install a waste heat boiler at the exit of the afterburner combustion chamber. The steam that is generated can then be used to provide process heat or to satisfy building ventilation heating requirements. Since the boiler handles only combustion gases after they are exhausted from the combustion chamber, no degradation of volatile control efficiency occurs. If additional steam capacity is already needed, including a waste heat boiler on an afterburner may be quite cost-effective.

In many installations where an afterburner is needed to control air emissions, an existing boiler or process heater may already be present. It may be appropriate under these circumstances to treat the vent gas in the existing combustion device. However, care must be taken to assure that existing boiler or heater operation is not compromised and that the vent gas is introduced into the boiler or heater in such a way that the desired volatile destruction efficiencies are obtained. The capacity of the boiler or heater to combust the vent gas needs to be adequate, even during periods of low steam or heat demands. Although conditions in a boiler firebox approximate those in a well-designed afterburner, good destruction efficiency depends on adequate temperature, retention time, turbulence, and flame. If the volume of vent gas to be burned in the boiler or heater is excessive, the thermal efficiency of the unit will be reduced in much the same way as when excess combustion air is used. Also, the oxygen content of vent gas used as combustion air must be similar to that of air in order to maintain adequate combustion.

In addition, the manner of introducing the vent gas into the firebox of the boiler or heater is important in achieving the desired destruction efficiency. Most often, vent gases are introduced through the burner as combustion air or downstream from the burner to serve as secondary air. When the fuel value is high enough and the oxygen content is low enough, vent gases may even be introduced along with the boiler or heater fuel gas.

4. Regenerative Thermal Oxidizers

Another combustion technique that has been used to improve on the support fuel requirements of simple direct-fired afterburners is the regenerative thermal oxidizer. Regenerative thermal oxidizers are most often used when large volumes of vent gases with very low fuel values must be combusted.

In a regenerative oxidizer, before the vent gas to be burned enters the combustion chamber, it first passes through a chamber containing a bed of previously warmed ceramic stoneware elements, as shown in Fig. 7. As the vent gas flows through this bed, it is heated nearly to combustion temperatures and the pollutants it contains are partially destroyed. The preheated vent gas then enters the combustion chamber where further destruction of the pollutants takes place with a relatively small support fuel burner. The exhaust gases from the combustion chamber then pass through another chamber, containing another ceramic bed. In this bed, heat from the hot exhaust gases is recovered and stored in the ceramic elements for use in preheating the next cycle of vent gas. During this heat recovery phase, the exhaust gas temperature is reduced to nearly that of the inlet vent gas. When the temperature of the inlet ceramic bed becomes too low, flow

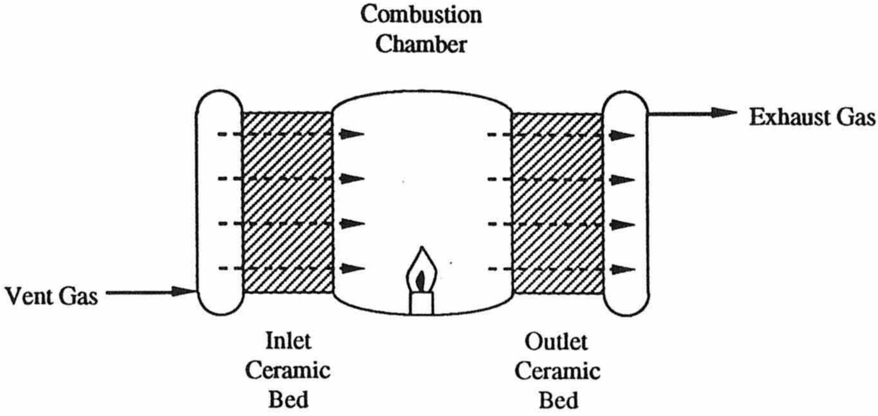

Figure 7 Flow through a regenerative thermal oxidizer.

through the oxidizer is reversed and inlet vent gas instead passes through the ceramic bed that was previously heated up by the combustion chamber exhaust gases. The combustion chamber exhaust gases now pass through the ceramic bed that had been cooled down by the inlet vent gas. This cycle is continuously repeated to maintain combustion of the vent gas.

In this manner, the oxidizer cycles back and forth between the ceramic beds and recovers up to 95% of the heat in the combustion chamber exhaust gases so that very little fresh support fuel is needed to sustain combustion [41]. Regenerative thermal oxidizers can handle vent streams that have such low fuel values that other types of afterburners would not be practical because of the support fuel requirements. They can achieve destruction efficiencies of more than 95% and approach efficiencies of 98% [42]. Higher destruction efficiencies are usually not feasible with regenerative oxidizers, mainly because of the residual pollutants remaining in the inlet ceramic bed, which are exhausted when the flow through the unit is reversed. In addition, although operating costs can be quite low, capital costs are usually greater than for other types of afterburners because of the additional cost of the ceramic beds.

5. Catalytic Oxidizers

A popular type of afterburner for vent gas treatment is the catalytic oxidizer, reportedly accounting for roughly 25% of the annual market for VOC emission control systems [43]. In the catalytic oxidizer, the vent gas to be burned is preheated with a direct flame and then passed through a catalyst bed. In the catalyst bed, the organic volatiles in the vent gas are oxidized at temperatures less than half those required for thermal oxidation. The treated gas is then exhausted to the atmosphere and, as in recuperative furnaces, heat may be recovered from this exhaust gas with a heat exchanger on the inlet to the oxidizer [41].

Because of the low temperatures needed for catalytic oxidation, preheat fuel requirements are quite modest compared with support fuel requirements in direct-fired afterburners, and emissions of NO_x (oxides of nitrogen) are very low. In addition, the need for expensive high-temperature alloy steels in oxidizer construction is eliminated. However, the platinum-group metal catalysts that are used in 75% of the catalytic oxidizers used for VOC destruction can be quite sensitive to degradation and poisoning from halogens and vaporized metals. In addition, particulates in the vent gas to be treated can cause fouling of the catalyst bed and subsequent performance degradation. Also, surges of high VOC concentrations in the vent gas entering a catalytic oxidizer can cause temperatures to rise high enough to cause damage to the unit and even fires.

Catalytic oxidizers usually are limited to roughly 95% destruction efficiencies on VOCs, although efficiencies of over 99% are claimed by some vendors in certain applications. Recent advances in catalyst technology have resulted in new catalysts that can achieve better than 95% destruction efficiencies on emissions of halogenated hydrocarbons, without significant degradation of the catalyst [43].

6. Flares

Flares are usually reserved for the handling of emergency releases and nonroutine emissions, such as those occurring from processes during start-ups and shutdowns. Flares normally assure that such releases and emissions are handled safely so that hazardous levels of toxic or flammable materials do not collect in or around process units. Elevated flares need to be properly sized for all potential process events and must usually be equipped with steam or air injection. Good instrumentation and properly balanced steam/hydrocarbon ratios are important factors in the design of a safe, smokeless flare.

X. EXAMPLES OF SAFE STORAGE OF HAZARDOUS CHEMICALS

A. Chlorine

Chlorine [44–46] is a very toxic and hazardous material. The technology developed over many years of manufacture and use of chlorine has made it possible to handle it with a high degree of confidence. The technology developed for chlorine handling may be of help in designing facilities for other highly toxic materials with moderate to high vapor pressures at ambient temperature.

Cryogenic atmospheric storage of chlorine is a preferred storage technique. It affords a significant safety factor by reducing the initial flash of a possible liquid spill, compared with the flash that could result storing it at atmospheric temperature and under its vapor pressure. Table 5 shows the initial flash of stored liquid chlorine and the volume of gas produced from a 10,000 lb (4,540 kg) spill as a function of storage temperature.

Table 5 Initial Flash of a Chlorine Spill versus Storage Temperature

Pressure		Temperature		Volume of gas from a 10,000 lb (4,539 kg) liquid spill		
psig	kPa gauge	°F	°C	% flash	ft^3	m^3
0.0	0	–30	–34	0.0	0	0
15	103	–10	–23	3.6	1750	50
130	896	20	–7	9.0	4350	124
180	1241	38	3	12.0	5800	166

Figure 8 shows the initial fraction flashed as vapor versus temperature for chlorine. If liquid chlorine escapes through a hole or a broken pipe, it is probable that significantly more chlorine will be entrained in the air as small aerosol drops, so the amount in the air could be significantly more than that which is vaporized, as shown in Fig. 8.

If the material is stored at ambient temperature and pressure, hazardous concentrations can cover a very large area. The best way to reduce the possibility of a large gas release in the event of a spill is to store at low pressure and temperature.

In the Texas operations of The Dow Chemical Company, three large spheres are used for storage. Only one of the spheres is in operation at any one time to ensure that there is always room to pump chlorine from a leaking tank to a sound, empty tank. These spheres are of double-wall construction. The inner shell is made of low-temperature steel. The inner shell should meet Charpy V-notch test requirements of the current edition of ASTM A-20 at design temperature. Nickel-bearing steels (2.5–9% nickel) such as ASTM A203, A353, and A537 should be used

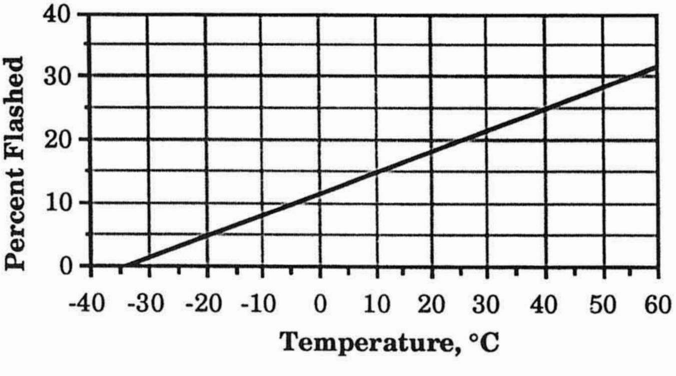

Figure 8 Initial flash of liquid chlorine versus storage temperature.

to satisfy low-temperature conditions. The inner shell is suitable for a design pressure of 50 psig (344.7-kPa gauge) at –40°C (–40°F). An outer shell surrounds the inner shell, with a 3-ft annulus between the two shells. Perlite is used between the shells to provide insulation. Dry air is used to purge the annulus and keep the perlite dry. The vent air is monitored for chlorine to detect any possible leakage of the inner shell. The outer shell is designed only as a container for the insulation and is not designed for operating at either pressure or vacuum. Figure 9 shows the system schematically.

To reduce the possibilities of a major vapor release, the spheres are installed on top of a concrete pit that is designed to hold slightly more than the volume of one sphere. The area around the spheres is equipped with dikes to drain a spill to the pit. The pits are of reinforced concrete and are equipped with closures to seal the pit . The pits are sized to provide minimum surface area to limit vaporization of spilled chlorine. A suitable foam may be used to reduce evaporation if necessary. A blower is used to remove chlorine vapors in the event of a spill. The blower discharges into a caustic scrubber to remove the chlorine from the air. Most of the chlorine in a spill will be contained in the pit. Only the chlo-

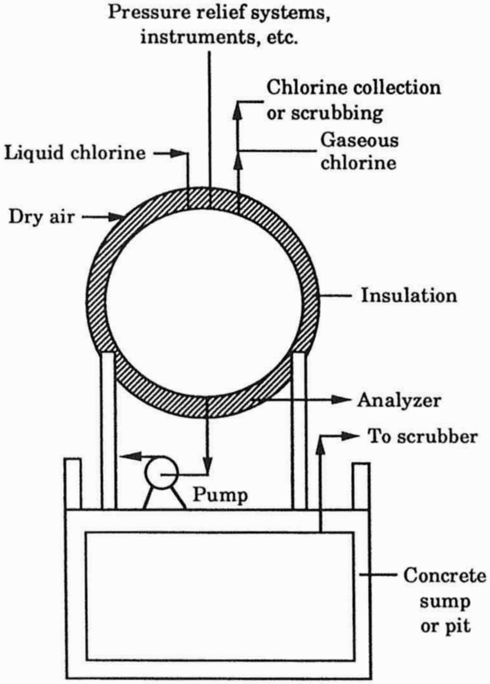

Figure 9 Refrigerated storage of liquid chlorine at atmospheric pressure.

rine vaporized by contact with the warmer concrete of the pit and diked area will not be contained in the pit and will be sent to the chlorine scrubber. The pit has a sump and pump to remove rainwater.

Sealless, or canned pumps, specially modified for chlorine service, are used for transfer. There are remote operated valves on the suction and discharge of the pumps. Liquid chlorine is chilled to the required temperature for storage by a refrigeration system and heat exchangers. The low vapor pressure of chlorine imposes severe NPSH (net positive-suction head) problems on liquid pumps. The bottom of the sphere should be high enough to allow it to be pumped empty.

The transfer of liquid chlorine should be minimized.

Chlorine should be revaporized and transported as a gas for use within a plant. If liquid chlorine is transported in pipes, the pipe material must be suitable for low-temperature service. Cold liquid chlorine must not be transferred to equipment that cannot withstand the low temperatures of liquefied chlorine at atmospheric pressure. Remote-controlled block valves should be provided to isolate equipment in an emergency. Only chlorofluorinated lubricants should be allowed in contact with chlorine.

Chlorine storage tanks should be located in separate clearly defined areas that can be isolated in emergencies and are accessible to emergency personnel. The chlorine area should be separated and protected by barriers when incidents from other processes or materials might damage storage tanks. Where practical, tanks should be located away from densely populated areas. The location should be chosen to minimize the possibility of external corrosion by acid gases or liquids, and the possibility of damage by vehicles, fire, or explosion.

Consideration should be given to a suitable backup refrigeration system that can maintain the pressure within safe limits during emergencies or equipment failure.

B. Safe Storage of Acrylonitrile

Acrylonitrile is a widely used monomer that is flammable and has severe acute and chronic toxic properties. The methods used to store and handle acrylonitrile may apply to some other flammable toxic materials.

The following is a summary of some of the most important recommendations to follow for the storage and handling of acrylonitrile [47]. These recommendations apply to tanks between 5,000 and 50,000 gal (19 and 190 m^3). Figure 10 shows a suggested design for a horizontal acrylonitrile tank.

1. Tank Design and Construction

The tank will be constructed of carbon steel suitable for the operating range and will be designed for complete draining. The normal acrylonitrile outlet will be above the base. For tanks smaller than 50 m^3 (13,200 gal), the design pressure rating will be 50 psig (345-kPa gauge) and full vacuum. This will provide com-

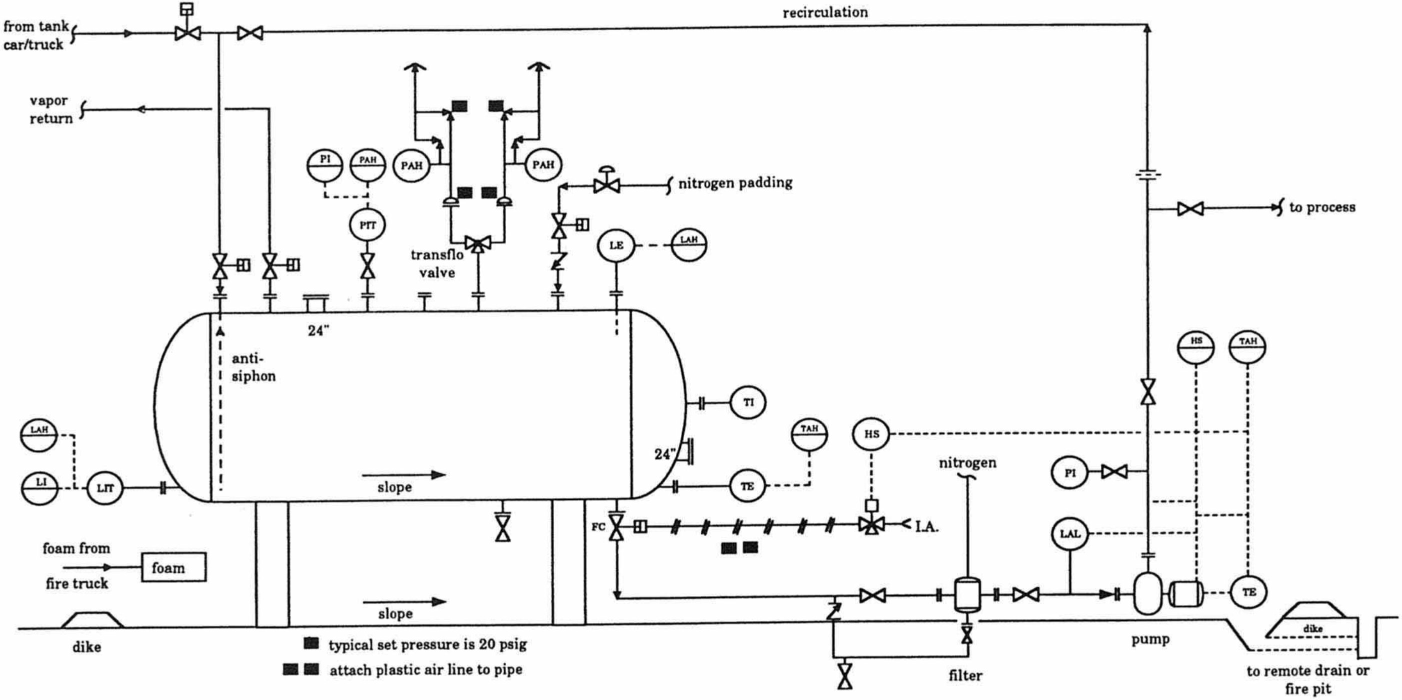

Figure 10 Suggested design for a horizontal acrylonitrile tank.

plete vapor containment under normal operation, eliminate the need for vacuum protection (which could allow air to enter, creating a flammable atmosphere), and allow higher integrity relief design of reduced size, compared with low-pressure tanks. This higher-integrity design will reduce the potential of a spill or vapor release of toxic and flammable vapors.

Where large storage tanks are required, a reduced design pressure is acceptable. Design will be to API-620 code or equivalent to eliminate breathing losses during ambient temperature and enable vent conservation during filling. Design pressure will be greater than the pressure caused by a tank liquid-full plus maximum relief setting to allow operating without breathing losses during a 20°C (36°F) rise of tank contents, equivalent to a 4.0 lb/in^2 (27.6-kPa) pressure change for pure acrylonitrile. This will account for average daily temperature change in most locations. The tanks should be installed aboveground, not buried, and painted with reflective paint, usually white.

2. Materials of Construction

Copper and copper alloys should not be used for any equipment likely to contact acrylonitrile.

3. Relief System

For tanks smaller 50 m^3 (13,200 gal U.S.), the relief system should consist of a fire-tested transflow valve and a complete set (for each valve branch) of a rupture disk and safety valve in series (see Fig. 10). Leak detection will be provided for the space between the rupture disk and safety valve by a pressure detector, with a relief valve to relieve the trapped volume. This provides a high degree of integrity. Rupture disks will be of metal construction. With relatively small tanks, the higher surface/volume ratio increases the rate of heat input during a fire. The use of a high-integrity relief system allows more time to fight a fire. Maintenance is made easier by using a transflow valve to achieve isolation of each safety valve and rupture disk combination. The transflow valve must always be open to a relief system. The specifics of relief system design must be tailored to each installation. Relief valves will be protected from the weather, and weep holes will be provided, directed away from the vessel wall, to ensure no water collection above the valves.

When a tank larger than 50 m^3 (13,200 gal U.S.) is used, up to about 190 m^3 (50,200 gal U.S.), the relief system should consist of single or possibly multiple rupture disks. In addition, owing to the size of these disks, a smaller relief device is required [typically 80-mm (3-in.) nominal diameter], set at a lower pressure than the large rupture disk to protect against inert gas failure or overfilling. There should be an independent relief device to protect against vacuum. The size should account for the maximum rate of airflow into the tank on a hot sunny day following cooling from sudden rainfall.

The relief vent should have a short containment pipe [approximately 0.5 m (1.5 ft)], since the vessel top is not a normal personnel area and has sufficient height to provide adequate dispersion if there is a release.

4. Fill Point

Liquid, unloaded or from circulation, should enter the tank below the liquid level, using a bottom sidewall nozzle available for this purpose, to reduce static hazard. For a large vessel, top filling without a dippipe is acceptable, using a chain for grounding to the liquid in the vessel.

5. Diking and Drainage

The storage tanks and unloading station will be diked and designed for runoff of a spill to a remote emergency containment sump. Because of the volatile and toxic nature of acrylonitrile, the containment surface area should be minimized to reduce evaporation, by using the maximum practicable wall height for the sump.

Design will include protection from potential fire radiation effects by a separation distance of 15 m (50 ft) from the tank wall. If plant layout makes this separation distance impractical, a properly designed firewall may be used to reduce the distance of the sump from the tank.

6. Fire Protection

Tanks are protected from fire by a fixed ring of spray nozzles for cooling the external wall of the vessel. There should be the capability to apply foam for at least a 10-min period to the containment area for extinguishing. Foam is the primary protection system, as it can both extinguish a fire and suppress toxic and odorous vapors in the event of a spill. In addition there should be the capability to apply foam repeatedly to the potential spill area and containment pit for fire and vapor suppression. Care should be taken to use the proper type of foam.

Acrylonitrile is quite soluble in water and has a lower density than water. The use of water alone in case of a spill without fire will increase the size of the disposal and recovery operation and perhaps only move the problem elsewhere, as the acrylonitrile will float on water until it is dissolved.

Fire protection should also be used for unloading stations.

7. Instrumentation

The following instruments are the minimum required for an acrylonitrile tank:

a. Analog level element. A weight or level device is acceptable.
b. Independent level or fail-safe high-level switch.
c. Analog temperature element fitted in a flanged well. When the monomer tank volume is greater than 50 m^3 (13,200 gal) an additional analog temperature element will be required.
d. Pressure-measuring device with vacuum capability.

e. Relief system pressure element or switch.
f. Two analog temperature elements on sealless or magnetic drive unloading pumps, one to sense the containment can temperature and the other the temperature of the internally circulating liquid.
g. Independent level element or fail-safe low-level switch to prevent the unloading pump from running dry.
h. Protection against overfill will be provided by the installation of a redundant analog level measurement that will be interlocked with the material supply valve to automatically stop filling the tank.

8. Inerting

The formation of explosive vapor in the tank will be prevented either by inerting with a 95% N_2–5% O_2 mixture from a suitable source (such as a membrane), or pure nitrogen mixed with air.

9. Emergency Isolation

Emergency block valves (EBVs) for isolation of equipment by remote activation must be installed for this material on storage tanks, process vessels, and long lengths of lines holding large amounts of fuel for a fire. A fire-tested valve is required. Actuators will be air-to-open and spring- to-close. The first 1 m (3 ft) of air line attached to the actuator will be made of plastic tubing that will burn through in case of a fire. Operating controls will be located at a safe distance.

10. Liquid Fill Level

The maximum permissible working capacity of a storage vessel is expressed with reference to water and is called the filling ratio. The following equation is used to calculate the filling ratio [14]:

$$FR = \frac{\rho_\mu}{\rho_\omega}(1 - FS)$$

where:

FR = filling ratio.
ρ_μ = density of material at reference temperature.
ρ_ω = density of water at 15°C.
FS = free space, the volume fraction to be left in the tank head space. This is normally 0.05 for monomer storage tanks

The reference temperature is the maximum temperature the material should reach in service. For vessels larger than 5 m^3 (1320 gal), this is typically 38°C (100°F). With these values, the weight of acrylonitrile in a storage tank loaded at 15°C (59°F) should be no more than 74.8% of the weight of water that could be loaded in the tank at 15°C, to allow a 5% free volume at 38°C (100°F).

11. Pumps

The unloading pump will be of sealless design, canned or magnetically driven, constructed of carbon steel (minimum metallurgy).

C. Safe Handling of Butadiene

Butadiene is used widely by many companies. The acute toxicity of butadiene is not high, but it is highly regulated because of its suspected carcinogenicity. The technology for handling and storing butadiene has been tested over many years and is well proved. The methods used to store and handle butadiene may apply to some other low-boiling hydrocarbons (liquefied petroleum gases) as well.

Following is a summary of some of the most important recommendations to follow for the storage and handling of butadiene [47]. These recommendations apply to horizontal tanks between 5,000 and 50,000 gal (19 and 190 m^3). They do not apply to spheres. Figure 11 shows a suggested design for a butadiene tank.

1. Tank Design and Construction

The tank will be constructed of carbon steel suitable for the operating range. It will be of full-draining design, sloped to the outlet, and have no trapped areas. The pressure rating will be 100 psig (690-kPa gauge) and full vacuum. The design pressure may be reduced for larger storage tanks when refrigeration is used. Refrigeration may be considered to maintain a storage temperature of 5–10°C (41–50°F) to reduce the formation of impurities. The question of refrigeration is an individual assessment of capital requirements of the tank, capital requirements of the refrigeration system, impurity formation, and a risk analysis of the reliability of the systems that prevent release versus the potential consequences. When refrigeration is used, consideration should be given to using recompression of butadiene vapors in place of refrigerant gases.

The tank will be installed aboveground, unburied, and externally painted with a reflective paint (usually white). It will be insulated if refrigerated. Since liquefied gas storage tanks have explosion potential, in a tank explosion the ends of the tank cylinder or the tank itself may be propelled with considerable force along the axis line of the tank for some distance. Primary protection will be by proper spacing and by orientation of the tank so that the potential damage to personnel, fire protection systems, and property is minimized.

2. Materials of Construction

Copper and copper alloys should not be used for any equipment likely to contact butadiene. There is a potential for the formation and accumulation of copper acetylide, a shock-sensitive material, from impurities in the butadiene.

3. Relief System

The relief system for each tank will consist of a fire-tested transflow valve and a complete set for each valve branch of a rupture disk and safety valve in series

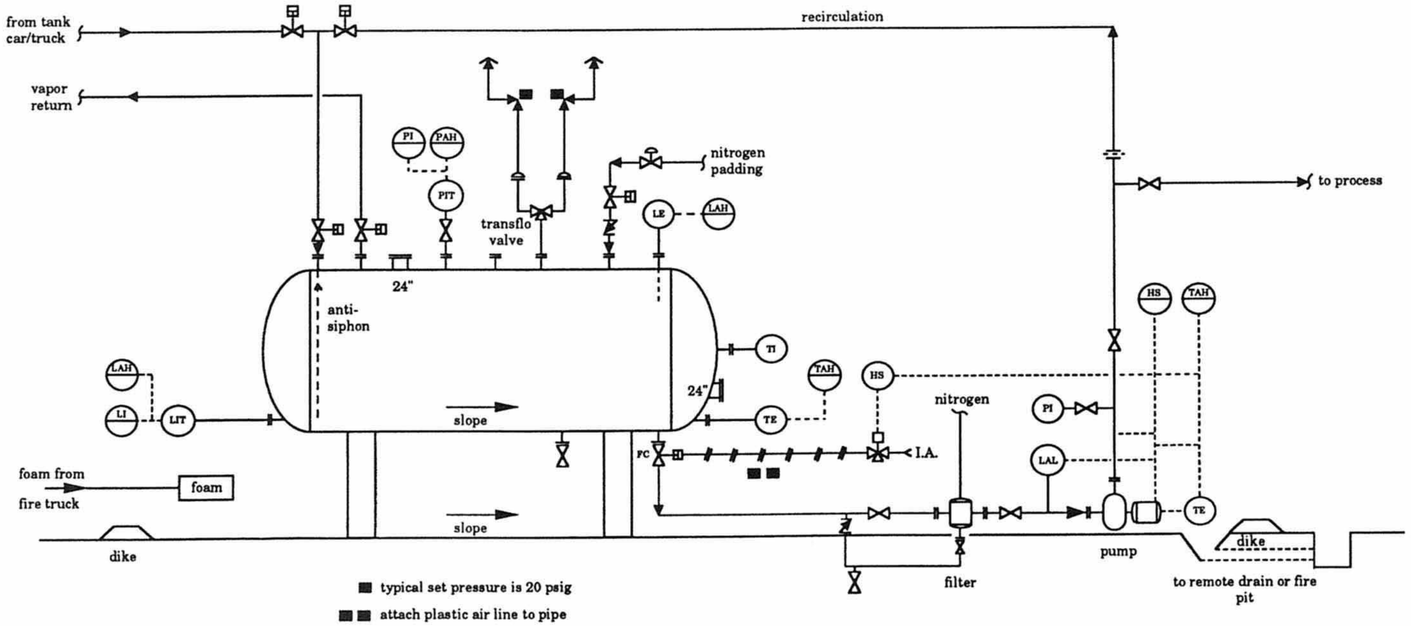

Figure 11 Suggested design for a butadiene tank.

(see Fig. 11). The specifics of relief system design must be tailored to each installation and should be sized using suitable pressure relief design technology. Leak detection will be provided.

4. Diking and Drainage

The storage tanks and unloading station will be diked and designed for runoff of a spill to a remote emergency containment sump. To avoid confined gas pockets and maintain good ventilation, dike walls will not exceed 0.5 m (1.5 ft) in height. Potential radiation effects should include a separation distance of 15 m (50 ft) from the tank wall. If plant layout makes this separation distance impractical, a properly designed firewall may be used to reduce the distance of the sump from the tank.

5. Fire Protection

The tanks will be protected from fire by a deluge system using a water rate of 10.2 L/min/m^2 (0.25 gal/min/ft^2) of tank area. The system will be interlocked with the combustible gas detectors for automatic operation. Manual operation capability will be installed in the field and in the control room.

6. Instrumentation

The following instruments are the minimum required for a tank:

a. Analog level element. A weight or level device is acceptable.
b. Independent level or fail-safe high-level switch.
c. Analog temperature element fitted in a flanged well. When the monomer tank volume is more than 50 m^3 (13,200 gal), an additional analog temperature element will be required.
d. Pressure-measuring device with vacuum capability.
e. Relief system pressure element or switch.
f. Two analog temperature elements on sealless or magnetic drive unloading pumps, one to sense the containment can temperature and the other the temperature of the internally circulating liquid.
g. Independent level element or fail-safe low-level switch to prevent the unloading pump from running dry.
h. Protection against overfill will be provided by the installation of a redundant analog level measurement, which will be interlocked with the material supply valve to automatically stop filling the tank.

7. Inerting

If ambient temperatures will maintain a vapor pressure above atmospheric pressure, it is preferred not to use nitrogen and to design the system with enough positive suction head to allow operation without inerts. If the vapor pressure at ambient temperatures can fall below atmospheric, the vapor space should be padded with pure nitrogen, with a maximum oxygen level of 150 ppm to prevent peroxide formation.

8. Emergency Isolation

Emergency block valves (EBVs) for isolation of equipment by remote activation will be installed for this material on storage tanks, process vessels, and long lengths of lines holding large amounts of fuel for a fire. A fire-tested valve is required. Actuators will be air-to-open and spring-to-close. The first 1 m (3 ft) of air line attached to the actuator will be made of plastic tubing that will burn through in case of a fire. Operating controls will be located at a safe distance.

9. Liquid Fill Level

The weight of butadiene in a storage tank loaded at 15°C (59°F) should be no more than 57.3% of the weight of water that could be loaded in the tank at 15°C, to allow a 5% free volume at 38°C (100°F). Refer to foregoing section on acrylonitrile.

10. Pumps

The unloading pump will be of sealless design, canned or magnetically driven, constructed of carbon steel (minimum metallurgy).

11. Freeze Protection

Installations in cold climates should have equipment to protect against freeze-up of traces of water in the butadiene. The recommended procedure is the capability to add small quantities [5–20 L (1.3–5.3 gal)] of methanol or propylene glycol to the tank to act as a water scavenger and antifreeze.

XI. CASE HISTORIES

A. Bhopal, 1985

On December 3 and 4, 1985, a chemical release causing a massive toxic gas cloud occurred at the Union Carbide India Ltd. plant in Bhopal, India [2, 48]. The process involved used methyl isocyanate (MIC), an extremely toxic chemical, to make Sevin, a pesticide. Between 1,700 and 2,700 (possibly more) persons were killed, 50,000 persons affected seriously, and 1 million persons were affected in some way. The final settlement may involve billions of dollars. It was one of the worst industrial accidents in history. The incident has severely affected Union Carbide, the parent company. The accident occurred when about 120–240 gal of water contaminated a MIC storage tank. The MIC hydrolyzed, causing heat and pressure, causing the tank rupture disk to burst.

Equipment designed to handle an MIC release included a recirculating caustic soda scrubber tower and a flare system designed for 10,000 lb/h, which would be moderate flows from process vents, not runaway reactions from storage. The design was based on the assumption that full cooling would be provided by the refrigeration system. The actual release was estimated to be 27,000 lb over 2 h, with the tank at 43°C. At the time of the release, the refrigeration had been turned off and the flare tower was shut down for repairs. A system of pressurized sprinklers that was supposed to form a water curtain over the escaping gases was deficient. Water pressure was too low to reach the height of the escaping gas.

There have been conflicting stories of how the water got into the tank, including operator error, contamination, and sabotage.

1. Immediate Cause

The immediate cause was hydrolysis of MIC from water contamination. The exact source of the water is controversial.

2. Contributing Causes

a. Flare tower shut down for repair.
b. Scrubber inadequate to handle a large release.
c. Chilling system was turned off, and was too small.
d. MIC tank not equipped with adequate instrumentation.
e. Operating personnel lacked knowledge and training.
f. Large inventory of MIC.
g. Lack of automatic devices and warning systems; it is said that safety systems had to be manually turned on.
h. When the plant had been built, over 20 years before the accident, there were very few people near the plant. At the time of the accident, a residential area had grown up near the plant with a density of 100 persons per acre, greatly increasing the potential exposure of people to toxic releases. There was no emergency action plan to notify neighbors of the potential for toxic releases or what to do if there was a release, nor was there a functioning alarm system.
i. Pesticide sales were dropping and business was bad, so there were economic pressures to minimize costs, which may have contributed to shortcuts.

3. Root Cause

The root cause of the accident appears to be a management system that did not adequately recognize the potential hazards of MIC. There was probably more inventory of MIC than was really needed. The main process expertise was in the United States. Local management does not appear to have understood the process or consequences of changes made. This includes plant design, maintenance, and operations; backup systems; and community responsibility. The legal problems of Union Carbide are likely to go on for a long time. There appears to be enough blame to go around for all those involved in any way in the plant, including government units.

This accident has become very well known. It is an objective of many chemical process safety programs and government actions to "avoid another Bhopal"—that is, avoid a severe release of toxic chemicals (usually toxic chemicals in the air). Almost every chemical company in the world has been affected by this incident in one way or another in the design and operation of chemical plants, in community action programs, and in the activities of such organizations as the American Institute of Chemical Engineers, the Chemical Manufacturers Association, and many governmental units.

B. Sandoz Warehouse, 1986

On November 1, 1986, near Basel, Switzerland [49,50], there was a chemical spill into the Rhine River resulting from a fire at a chemical warehouse reportedly storing 740 Mt of insecticides. No one was hurt, but 1/2 million fish were reported killed, many municipal water systems were contaminated, and some chemicals settled to the bottom of the river. It was a disaster for the Swiss nation, for the Rhine river, and for persons who used the Rhine.

A fire started in the warehouse in an area where dyes were stored. Firefighters used more than 3000 gpm of water from the Rhine to fight the fire. This soon overwhelmed the catch basin designed to hold 12,000 gal of water. About 27–30 Mt of toxic chemicals, including mercury, stored in the warehouse were washed into the river, forming a 25- to 44-mile-long patch of toxic material flowing at 2 mph. It was considered to be the gravest nonnuclear environmental disaster in 10 years. It was claimed by West Germany that the warehouse had been approved only for the storage of machinery.

1. Immediate Cause

The immediate cause was a fire caused by smoldering dyes, requiring the use of huge quantities of water, which overwhelmed the dikes and overflowed into the river.

2. Contributing Causes to the Seriousness of the Event

a. The warehouse was close to the river.
b. The warehouse contained large amounts of toxic material.
c. The Swiss were slow to give notice to other nations—it took 24 h.

3. Root Cause

The root cause was a management system that allowed storage of toxic materials close to the river in a warehouse that was intended only for machinery. The possibility of massive water use for toxic materials was not anticipated, and dikes were inadequate. It was claimed by insurance companies that Sandoz had been warned that the firefighting systems were inadequate.

An important lesson to be learned from this event is that plans should be made for all process plants to handle the large amount of water that could result from fighting a fire, and that could contain hazardous materials. Another lesson learned is the need to respond quickly to emergencies, especially when many persons are affected.

REFERENCES

1. Arthur D. Little, Inc., and R. LeVine, *Guidelines for Safe Storage and Handling of High Toxic Hazard Materials*, Center for Chemical Process Safety, American Institute of Chemical Engineers, New York, 1988.
2. DNV Technica, Ltd., Consulting Scientists and Engineers, London, England, and Columbus, Ohio, 1989.
3. T. Kletz, Inherently safer plants, *Plant Oper. Prog. 4*(3) (1985).
4. J. S. Arendt, D. K. Lorenzo, and A. F. Lorenzo, *Evaluating Process Safety in the Chemical Industry. A Manager's Guide to Quantitative Risk Assessment*, Chemical Manufacturers Association, 1989.
5. *Guidelines for Chemical Process Quantitative Risk Analysis*, Center for Chemical Process Safety, American Institute of Chemical Engineers, 345 E. 47th St., New York, NY, 1989.
6. A. Burk, Principal Safety Consultant, E. I. Du Pont de Nemours, Inc., Newark, Delaware, "Presentation on process hazards analysis and quantitative risk assessment," July 20, 1989.
7. M. W. Golay, and N. E. Todras, Advanced light-water reactors, *Sci. Am.*, April: 86 (1990).
8. S. B. Gibson, Safety Consultant, E. I. Du Pont de Nemours, Inc., Newark, Delaware, "Quantitative risk assessment," November 17, 1988.
9. S. M. Englund, Opportunities in the design of inherently safer chemical plants, *Advances in Chemical Engineering*, vol. 15 (J. Wei, J., eds.), Academic Press, Orlando, FL, 1990.
10. S. M. Englund, Design and operate plants for inherent safety, *Chem. Eng. Prog.*, parts 1 and 2, March and May (1991).
11. T. Kletz, Cheaper, safer plants or wealth and safety at work, Institution of Chemical Engineers, Rugby, UK, 1985.
12. T. Kletz, Friendly plants, *Chem. Eng. Prog.*, July: 18–26 (1989).
13. T. Kletz, *An Engineer's View of Human Error*, Institution of Chemical Engineers, VCH Publishers, New York, 1991.
14. F. Lees, *Loss Prevention in the Chemical Industries*, Buttersworth, London, 1980.
15. L. C. Schaller, *Plant/Oper. Prog.*, *9* (1) (1990).
16. D. Hendershot, Alternatives for reducing the risks of hazardous material storage facilities, *Environ. Prog.*, *7*: 180 (1988).
17. D. L. Russell, and S. W. Hart, (1987). Underground storage tanks, potential for economic disaster, *Chem. Eng.*, March 16: 61–69 (1987).
18. C. Semonelli, Secondary containment of underground storage tanks, *Chem. Eng. Prog.*, June (1990).
19. R. D. R. Hoffman, Stopping the peril of leaking tanks, *Popular Sci.*, March (1991).

20. "USEPA asks rules to prevent leaks in underground tanks," New York Times, April 3 (1987).
21. K. Brooks, R. Rhein, and M. Bluestone, The hidden problems of underground storage, *Chem. Wk*, Sept. 24: 38 (1986).
22. *AP-42 Compilation of Emission Factors for Stationary Sources*, U. S. Environmental Protection Agency, Office of Air Quality Planning and Standards (1985).
23. *API Standards*, American Petroleum Institute, 1220 L St., N.W., Washington, DC 02005.
24. *ANSI/API-620-1986*, American National Standards Institute, 1430 Broadway, New York, NY, 1986.
25. J. Prokop, The Ashland tank collapse, *Hydrocarbon Processing* May (1988).
26. *Engineering News Record*, June 9 (1988).
27. *ASME Boiler and Pressure Vessel Code; ASME Code for Pressure Piping; ASME Performance Test Codes; ASME General and Safety Standards*. American Society of Mechanical Engineers, 345 E. 47 St., New York, NY.
28. S. M. Englund, and D. Grinwis, Redundancy in control systems, *Chem. Eng. Prog.* Oct. (1992).
29. J. H. Wensley, "Improved alarm management through use of fault tolerant digital systems," International Conference and Exhibit, Instrument Society of America, Houston, TX, Oct. 13–16, 1986.
30. S. M. Englund, J. L. Mallory, and D. Grinwis, Preventing backflow, *Chem. Eng. Prog.* Feb. (1992).
31. *Air Quality Handbook*, ENSR Consulting and Engineering, 35 Nagog Park, Acton, MA 01720, June 1988 edition.
32. *Code of Federal Regulations*, Protection of environment, Title 40, Parts 53–60, Office of the Federal Register, National Archives and Records Administration, Washington, DC, July 1991.
33. *Code of Federal Regulations*, Protection of environment, Title 40, Parts 61–80, Office of the Federal Register, National Archives and Records Administration, Washington, DC, July 1991.
34. *Clean Air Act Amendments Bulletin Board System*, U. S. Environmental Protection Agency, Office of Air Quality Planning and Standards, 1200-9600 baud, (919)541-5742, April 1992.
35. *AP-40 Air Pollution Engineering Manual*, 2nd ed., U. S. Environmental Prevention Agency, Office of Air Quality Planning and Standards, 1973, p. 634.
36. J. S. Forrester, and J. G. LeBlanc, A cool way to reduce emissions, *Chem. Eng.* May 23 (1988).
37. *AP-40 Air Pollution Engineering Manual*, 2nd ed., U. S. Environmental Prevention Agency, Office of Air Quality Planning and Standards, 1973, pp. 227–229.
38. D. H. White, and P. G. Barkley, The design of pressure swing adsorption systems, *Chem. Eng. Prog.* Jan., (1989).
39. *Ventsorb for Industrial Air Purification*, Bulletin 23-56c, Calgon Carbon Corp., Box 717, Pittsburg, PA 15230-0717, 1986.
40. *AP-40 Air Pollution Engineering Manual*, 2nd ed., U. S. Environmental Protection Agency, Office of Air Quality Planning and Standards, 1973, p. 176.

41. A. E. Hodel, Catalytic oxidation controls VOC emissions, *Chem. Processing* June (1992).
42. J. H. Mueller, Spray paint booth VOC control with a regenerative thermal oxidizer, Air Pollution Control Association 81st Annual Meeting, June 19--24, 1988, paper 88-84.3.
43. G. Parkinson, Catalysts and clean air, *Chem. Eng.*, July (1991).
44. *Refrigerated Liquid Chlorine Storage*, Pamphlet 78, The Chlorine Institute, Inc., 70 W. 40th St., New York, NY 10018, July 1984.
45. C. Golden, Chlorine Technology Center, The Dow Chemical Co., Freeport, TX, personal communication, Mar. 9, 1990.
46. R. Woods, "Atmospheric chlorine storage," 23rd Plant Managers Seminar, The Chlorine Institute, New Orleans, LA., Feb. 6, 1980.
47. N. E. Scheffler, *Raw Material Storage*, The Dow Chemical Company, Midland, Michigan, Jan. 1991.
48. *Chem. Eng. News*, Feb. 11 (1985).
49. H. Neuerbourg, Associated Press, Basel, Switzerland, Nov. 17 (1986).
50. T. Petty, Associated Press, Koblenz, Germany, July 18 (1988).
51. Semonelli, Chris, Colley, Inc., Pawtuckett, RI, Secondary containment of underground storage tanks, *Chem. Eng. Prog.*, June (1980).

8

Transfer of Highly Toxic Materials

Stanley S. Grossel
Process Safety & Design, Inc., Clifton, New Jersey

I. TRANSFER OF LIQUIDS

A. Introduction

When pumping and transferring highly toxic liquids between items of equipment, the primary safety and occupational health considerations are the elimination or minimization of leaks and fugitive emissions. Pumping and transferring can be accomplished safely by the following means:

Centrifugal and vertical submersible pumps
Positive-displacement pumps (rotary, gear, vane, diaphragm)
Sealless pumps—canned and magnetic drive
Transfer by liquid or gas-driven jet pumps
Gas pressurization transfer
Vacuum suction transfer

This section will not discuss in any great detail the mechanical design of pumps or other transfer equipment, per se, since there are several good books on this subject [1–4]. Rather, what will be discussed are the mechanical features that enhance safety, selection criteria for various types of pumps and transfer methods, monitoring instrumentation to detect pump component failures, methods for containing highly toxic liquids within the pumps and transfer equipment, materials of construction considerations, handling of leaks and emissions, and other safety considerations and engineering-control techniques.

B. Centrifugal and Vertical Submersible Pumps

Standard centrifugal pumps, the most common type found in the chemical industry, can be used to pump highly toxic liquids if properly designed, installed, operated, and monitored. In such service, double inside mechanical seals or tandem mechanical seals should be used. A buffer liquid between the seals, with a reliable seal-failure alarm should be provided. Figure 1 shows a buffer liquid system with a circulating, pressurized reservoir system for a double mechanical seal. If there is a seal failure, pressure on the reservoir holding the liquid will force the liquid into the process fluid or out of the seal on the low-pressure side, and the liquid level in the reservoir will show an abnormal level drop. The level switch in the reservoir should be connected to an alarm and interlocked to the

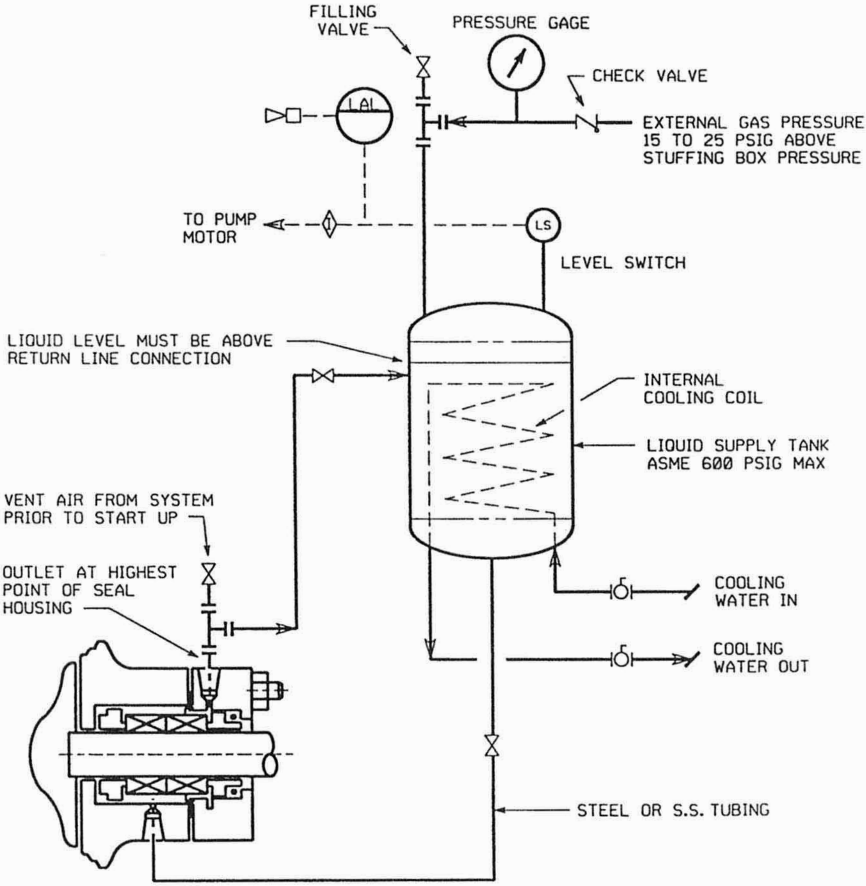

Figure 1 Mechanical seal buffer liquid system with pressurized external reservoir.

pump motor to shut it down. If desired, the level switch can also be interlocked to close the valve at the supply tank nozzle in the suction pipeline. Some type of heat transfer device is required with a circulating, pressurized reservoir system to remove the heat of seal friction. This device can be a jacket on the reservoir, jacketed piping, or a small heat exchanger. Sometimes it may be necessary to heat the circulating barrier liquid, either to prevent freezing of the process liquid or the barrier liquid, or to control the viscosity of the barrier liquid. Special care should be taken here for outdoor installations, especially in cold climates, as viscosity increases can cause a high-pressure drop. Figure 2 shows a buffer liquid system for which the liquid is provided from a pumped, pressurized source (e.g., a process water system). The solenoid valve in the buffer liquid supply line is interlocked with the pump motor so that the motor cannot be started unless the buffer liquid line is open. In addition, a pressure or flow switch is interlocked with the motor to shut it down if there is a loss of buffer liquid supply. Tandem mechanical seals are used when no contamination of the fluid being pumped can be tolerated. With tandem mechanical seals, the buffer liquid is usually at atmospheric pressure, or a little higher, and a failure of the inner seal will result in a

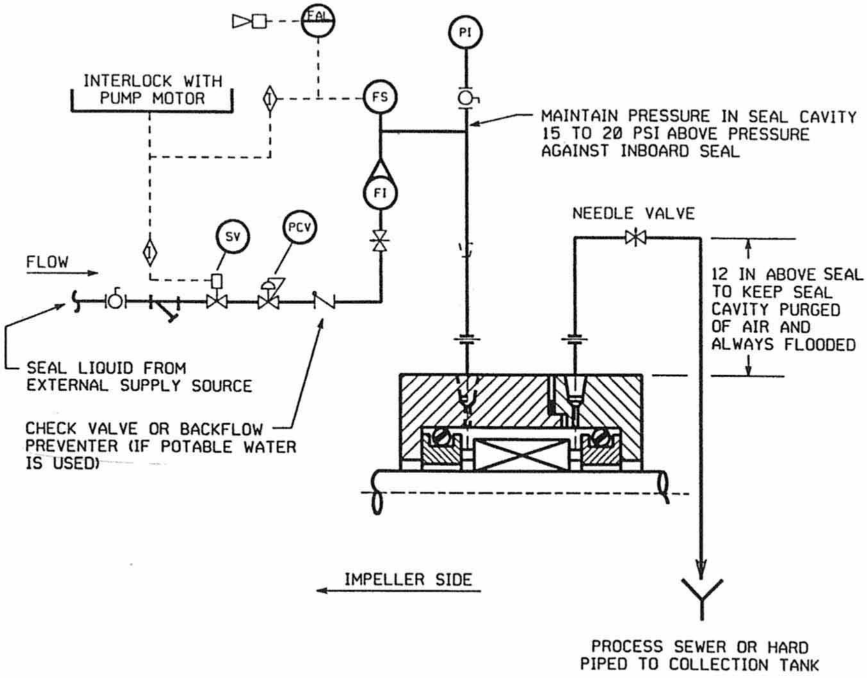

Figure 2 Mechanical seal buffer liquid system with circulation of clean fluid from external supply system.

rapid filling of the reservoir with process liquid. A high-pressure or liquid level switch in the reservoir should be installed that will alarm or shut down the pump motor. Further details about mechanical seal systems can be found in API Standard 610 [5] and STLE Special Publication SP-30 [6].

Another safety consideration for centrifugal pumps is the avoidance of operation at severely reduced flow or at shutoff. Frequently, instability points are reached as pump flow is throttled. The instability flow condition may be encountered at flows of 50%–60% of the flow at the best efficiency point of the pump, or lower. This instability condition can cause excessive vibration and damage to pumps, drivers, couplings, gears, piping, and adjacent equipment. To avoid this problem, which could result in release of highly toxic liquids as a result of the aforementioned damage, a minimum flow recirculating line should be installed as a bypass in the discharge line from the pump discharge side of the pump, upstream from the block and check valves. The bypass line should be routed preferably back to the pump supply tank if it is an adequate "heat sink." Otherwise, the minimum flow bypass line should be routed through an external cooler before returning to the supply tank or pump suction line. The minimum flow rate requirements should be obtained from the pump vendor. Also, if thermally sensitive liquids are being pumped, it is advisable to install a temperature sensor in the pump casing, which is interlocked to shut off the pump motor when a high casing temperature is reached.

Centrifugal pumps are also available in canned-motor and magnetic-drive designs which are less susceptible to leakage problems, as they are sealless. These types of pumps are discussed further on in this section.

Vertical submersible pumps are preferred over centrifugal pumps by some companies for transferring highly toxic liquids, as there is no suction piping from which a leak can occur. As in a centrifugal pump, shaft sealing is required to prevent fugitive emissions from the pump, and double mechanical seals are recommended. A variety of vertical pump designs, however, use packing to seal the shaft. In this situation, to prevent toxic gas from leaking to the atmosphere, a buffer gas (dry air or nitrogen) is piped in between the lower and upper sealing element (Fig. 3). In this event of packing failure, an emergency seal is pressurized to prevent toxic gas leakage into the buffer chamber. Various toxic liquids, such as liquid chlorine, anhydrous hydrogen cyanide, phosgene, and bromine, are handled successfully by pumps with this packing system. When specifying vertical submersible pumps, this feature should be specified if packing is to be used.

C. Positive-Displacement Pumps

For viscous liquids (> 20 cp), or flows of 40–50 gpm or less, positive-displacement pumps are frequently used. Conventional rotating positive-displacement pumps (gear, vane, lobe, progressing cavity, and screw type), with double me-

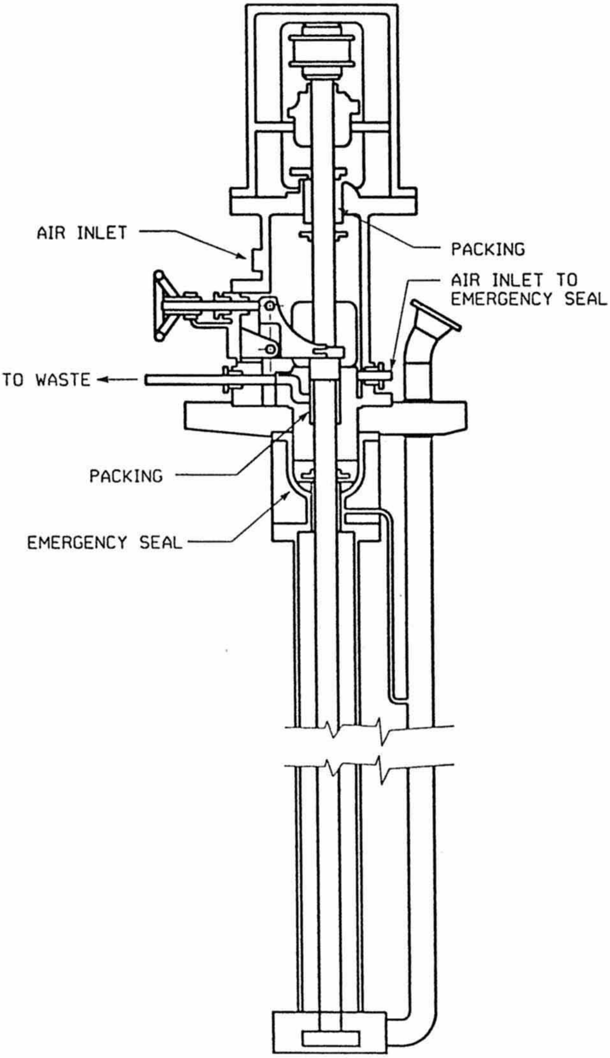

Figure 3 Vertical submersible pump buffer gas system arrangement.

chanical and tandem mechanical seals, can be used to pump highly toxic liquids. Recently, several manufacturers have introduced magnetic-drive, rotating positive-displacement pumps, which are inherently safer than the conventional type. The advantages and problems of magnetic-drive pumps are discussed in the next section.

Motor-driven diaphragm metering pumps and air-operated diaphragm pumps are good pumps for handling highly toxic liquids. Unlike centrifugal or rotating positive-displacement pumps with mechanical seals, they do not have a sealing device that can leak. Also, they cause a smaller temperature rise at low flows. Consequently, pumps with double diaphragms are recommended for highly toxic chemicals. This type of construction allows the volume between the diaphragms to be monitored and alarmed, using pH, liquid conductivity, or pressure instrumentation techniques.

Most positive-displacement pumps require a pressure relief device to protect against overpressure, which can be caused by a closed discharge valve or restricted discharge line. External relief valves are usually used because it is easy to see when they open, they can be easily set at any pressure, they remain open only long enough to relieve pressure and so reduce process fluid loss, and they dissipate pump heat if the valve discharge is not recirculated directly to the pump suction piping. It is recommended that the relief valve discharge rather be piped back to the suction supply tank. Internal relief valves are commonly installed in hydraulically driven diaphragm pumps as protection if the external relief fails to work. A major drawback is that internal relief does not dissipate heat. Even if the pump comes equipped with an internal relief valve, it is strongly recommended that an external relief valve be provided when pumping highly toxic liquids. A rupture disk is usually used with slurries, since an external relief valve would plug.

An external relief device should be located as close as possible to the pump discharge, and before any block valve.

D. Sealless (Canned-Motor and Magnetic-Drive) Pumps

Sealless pumps, such as canned-motor and magnetic-drive pumps, are being used in greater frequency for handling highly toxic liquids. Both types of sealless pumps are similar, in that they are driven by a magnetic coupling between the pump and an external rotating motor. The magnets are attached to the pump shaft and the motor shaft with a nonmagnetic shield between them. Magnetic-drive pumps use permanent magnets, whereas canned-motor pumps use electromagnets in the external motor stator to drive the internal motor rotor. The rotor and stator are separated by a nonmagnetic shield, also known as a "can." For further discussion of the design features, applications, and problems of sealless pumps, refer to the articles by Parkinson and Johnson [7], Reynolds [8], Schommer and Johnson [9], Newby and Forth [10], McCallion [11], and CP Staff [12].

Because they do not have a seal, there is less of an opportunity for leaks and fugitive emissions to occur. However, there are two "weak points" in sealless pumps that can result in serious leakages occurring. These weak points are the containment shell, or can, and the bearings. The containment shell is usually fairly thin to allow enough of the magnetic field to drive the pump. Thus, if the rotor bearings, which are internal and lubricated by the pumped fluid, wear enough to cause the rotor to move sufficiently to rub against the can, the can may be punctured and rupture, causing uncontrollable loss of the fluid being pumped. Innovative design features by a number of pump manufacturers address these problems. Some pumps are constructed with an outer shell that serves as a secondary containment should the can rupture. One pump manufacturer, and perhaps others as well, provides a sensor well in the secondary containment shell that can accept a moisture-sensing probe, which can be interlocked to an alarm or to the motor to shut it down. Another vendor has an option that incorporates a mechanical seal between the radial ball bearings and the secondary-containment housing. A monitor to detect bearing failure is available on some sealless pumps, as are temperature probes. In summary, all or some of the following safety features are available from sealless pump manufacturers: bearing wear detector, temperature monitoring, dual can, corrosion detector, power sensor, dry run detector, and can leak detector. Nasr discusses these safety features in detail [13].

Several operating precautions should be observed when using sealless pumps. Low-boiling liquids may flash when circulated through the internal bearing and rotor assembly, resulting in vapor binding of the pump when the liquid is returned to the lowest pressure zone at the back of the impeller. This can usually be prevented when using canned motor pumps by using a reverse circulation system and returning some liquid back to the suction tank. With magnetic-drive pumps, a reverse circulation system cannot be as easily installed because the can is blinded on the back side by the external magnetic drive. A small bypass stream sometimes can be taken off the discharge end, cooled externally, and injected into the can area. Another possible cause of failure is solids in the pumped fluid which can create problems with the internal lubrication system, as they can constrict or block passageways entirely. Various pump manufacturers use different techniques to handle this problem, such as self-cleaning strainers, and a piping arrangement similar to mechanical seal piping, including strainers, separators, and external flushing. Special care should be taken to avoid running sealless pumps dry, which can result in worn bearings and internal rotor galling or ripping open of the can. Some manufacturers offer an electric current-sensitive device to detect a dry-running pump.

When specifying sealless pumps, the aforementioned safety features and monitoring devices should be considered.

E. Transfer by Liquid or Gas-Driven Jet Pumps

Jet pumps, which are devices with no moving parts, can be used to transfer highly toxic liquids. They have been used in such diverse applications as nuclear reactor coolant circulation systems, fuel pumping in aircraft and spacecraft power systems, and thrust augmentation in propulsion systems [14]. In the chemical industry, they have been used in the continuous manufacture of TNT to transport water-insoluble explosive mixtures through the various processing steps of a continuous nitration process, thereby eliminating the use of pumps, which can be the source of trouble in the event of friction-sensitive explosives [15]. Jet pumps are a class of liquid-handling equipment that make use of the momentum of one fluid to move another. Jet pumps are classified as ejectors or injectors. Ejectors are designed for use in operations for which the head pumped against is low and is less than the head of the motive fluid. Injectors are special types of jet pumps that use a condensible gas (usually steam) to entrain the liquid to be transferred and to discharge this liquid into a space under the same pressure as that of the motive gas. When the motive fluid is a liquid, the jet pump is called an eductor. Jet pumps have low efficiencies, in the order of only a few percent, and they also develop a low head, except in special types. They have the disadvantage of diluting the fluid being pumped by mixing it with the motive fluid. However, if air or nitrogen is used as the motive fluid, it can be disengaged from the process fluid in the downstream receiver. Also, liquids that would have to be added to the pumped liquid in the next operation can be used as the motive fluid, since dilution does not matter. Jet pumps, in spite of their low efficiency, can be used to transfer highly toxic liquids from one process vessel to another, if the pipe run is relatively short, so that a high head is not required. Figure 4 shows a jet pump transfer system.

F. Gas Pressurization Transfer

Liquids can be transferred by means other than by pumping. This can be accomplished by using a gas (usually air or nitrogen) at a sufficiently high pressure to force the liquid from one process vessel through connecting piping to another process vessel. Gas pressurization has been used widely to feed rocket liquid propellants from supply tanks to the rocket thrust chamber. In the chemical industry, gas pressurization transfer of liquids is commonly practiced. Some chemical manufacturers even recommend that chemicals they supply in drums be unloaded by gas pressurization (e.g., acetaldehyde [16]). For this, the drums are of a special type, designed for 40 psig. A typical gas pressurization transfer system is shown in Fig. 5. The air or nitrogen supply line to the tank should be provided with a safety valve, set at or below the MAWP of the tank, to protect the tank against overpressure if the pressure-reducing valve fails. If the tank being pressurized with nitrogen is in a closed room, the discharge line from the safety valve should be routed to a safe location outdoors to prevent possible asphyxiation of operating personnel who might be in the room when the safety valve is discharged.

G. Vacuum Suction Transfer

Unloading of drums of liquids by vacuum suction transfer is a common operation in batch chemical processes. Figure 6 shows a typical arrangement for such

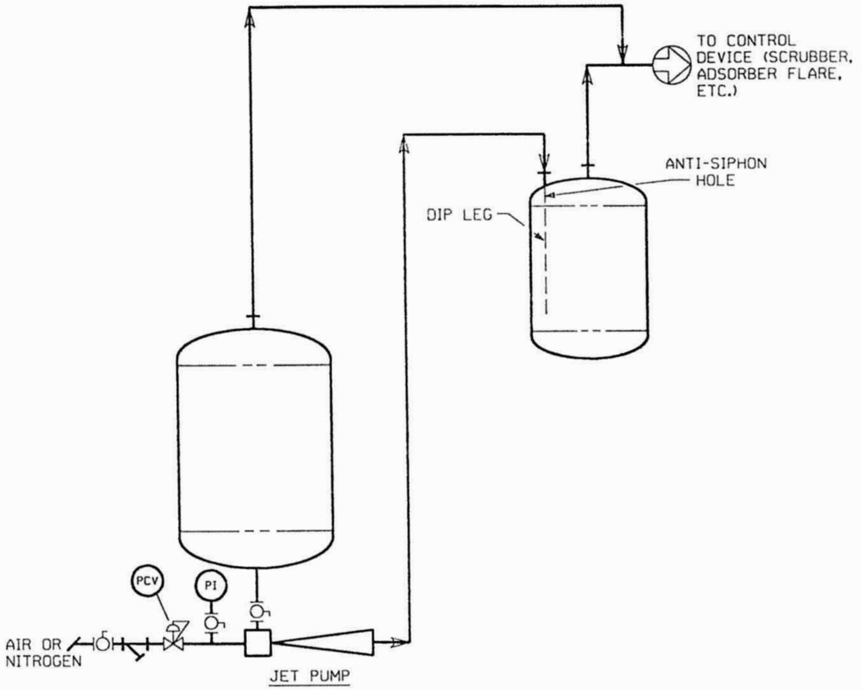

Figure 4 Jet pump arrangement for pumping highly toxic liquids.

a system. The system is operated in the following manner: Valve A is opened and the vacuum pump or ejector is turned on, pulling a vacuum on the process vessel to the desired negative pressure. Then valve A is closed, and the vacuum pump is turned off, "locking in" the vacuum in the vessel. Next, valve B is opened and the liquid in the drum is "sucked up" into the vessel. Then valve B is closed, and nitrogen is admitted to the vessel to break the vacuum. When highly toxic liquids are transferred in this manner, the drum should be placed in an enclosure that is connected to a scrubber or adsorber, and an exhaust hood should be placed at the top of the drum, which will remove any vapor emissions from the drum bung hole to the vapor control equipment. There should also be a scabbard, connected to the scrubber or adsorber, in which to place the drum discharge wand (dip pipe) after the drum has been emptied. Highly toxic liquids can be transferred from one process vessel to another in this manner. Vacuum suction transfers are limited to systems with short transfer lines, as the maximum available pressure differential is 1 atm. Also, transferring of viscous liquids by vacuum suction may pose problems. Two other problems that have to be taken into

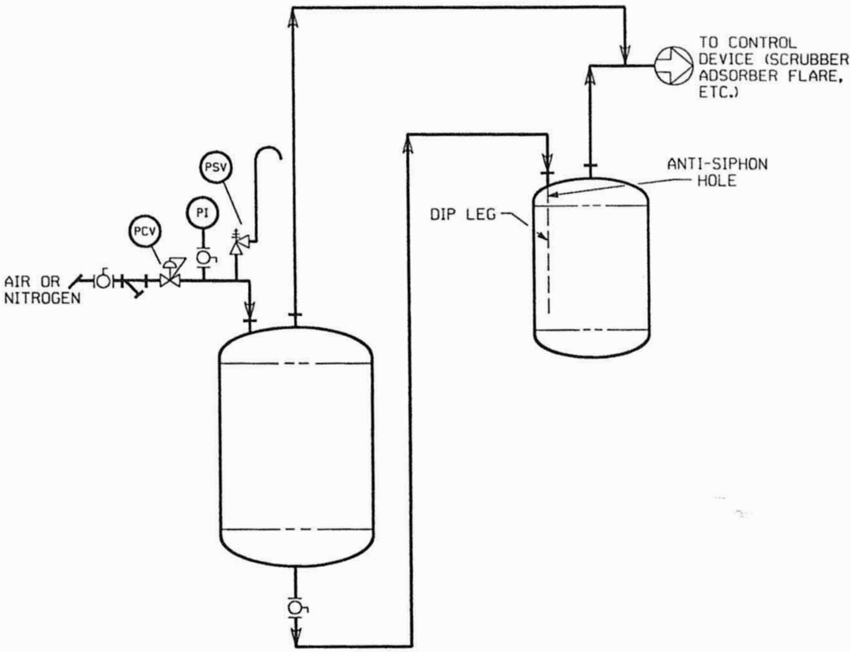

Figure 5 Typical gas pressurization transfer system.

consideration are (1) the liquids in the vacuum source (pump oil, seal water, or steam jet condensate) may become contaminated with highly toxic vapors unless protected by an intermediate condenser or scrubber, and (2) the receiving vessel may be overfilled, which will contaminate the vacuum equipment unless there is a trap in the line.

H. Drum and Bulk Container Unloading

When unloading drums of highly toxic liquids, the drums should be placed in a ventilated enclosure, as described in the foregoing Sec. I.G. The operator should wear protective clothing and use an air hood when connecting and disconnecting drums to and from the transfer piping.

In recent years, bulk containers for liquids, larger than drums, have become available. These are similar to "tote bins" for powders and granular solids. They are usually unloaded by gravity flow (located above the receiving vessel) or by a pump and piping system. For highly toxic liquids, these bulk containers should be situated in a ventilated enclosure, as described earlier for drums. The opera-

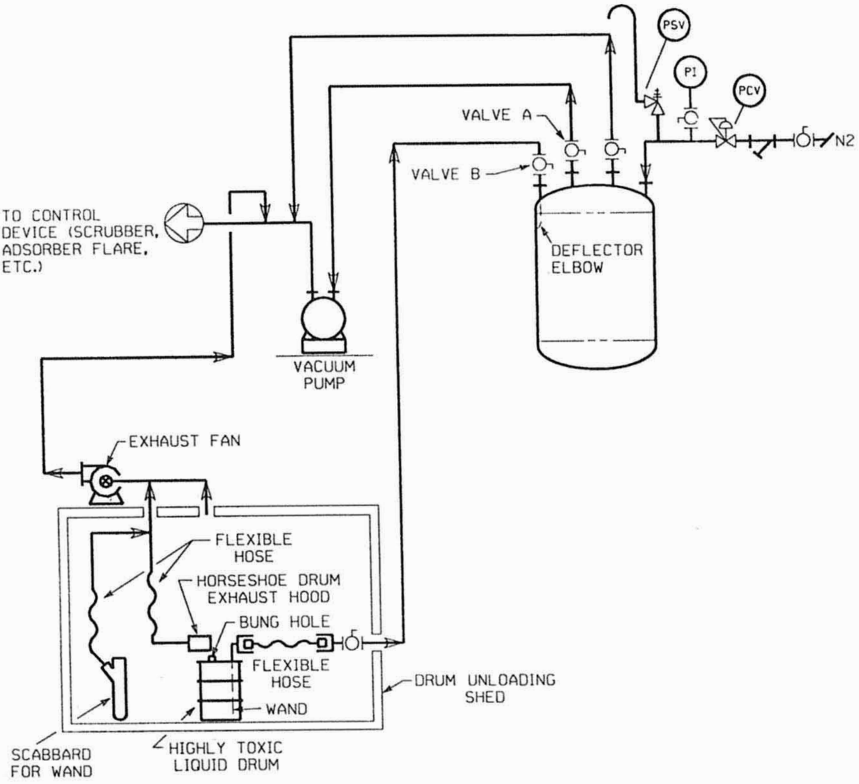

Figure 6 Typical vacuum suction transfer system for unloading drums of liquids.

tor should similarly wear protective clothing and use an air hood when unloading them.

When unloading drums or bulk containers, consideration must be given to spill control measures. These measures include solid adsorbents, foams, neutralizing agents, or others. For detailed discussions of spill control techniques, the books by Bennett and Feates [17] and Unterberg et al. [18] should be consulted.

I. Railroad Car and Tank Truck Unloading

Some highly toxic materials are used in large volume in industry and are therefore shipped in railroad cars and tank trucks. Unloading procedures and precautions are often provided by the supplier, and should be exactly followed. General safety considerations for unloading railroad cars and tank trucks are presented in a CCPS guidelines book [19].

J. Materials of Construction Considerations

Pumps made of brittle materials, such as cast iron, shall not be used for highly toxic liquids. Ductile iron shall also not be used, because ductile iron, when exposed to temperatures produced by flammable liquid fires, can revert to cast iron.

Normally, materials of construction for pumps and piping are selected for their resistance to corrosion. However, consideration must also be given to the effect that certain elements in alloys have on the stability of the specific liquid being pumped. For example, when pumping 54 wt% (or higher concentration) monomethyl hydrazine at 160°F or higher, 304 stainless steel pumps should be used, rather than 316 stainless steel pumps, as the 3% molybdenum content of 316 stainless steel catalyzes the decomposition of monomethyl hydrazine. This results in the outbreak of a spontaneous fire [20]. To avoid other such "booby traps," material safety data sheets and information on recommended materials of construction should be requested from the manufacturer of the chemical being pumped. The book by Bretherick also contains much information on catalytic effects of various metals on chemicals that result in hazardous conditions [21].

K. General Safety, Occupational Health, and Maintenance Considerations

Several general safety practices for pumps handling highly toxic liquids are recommended as follows:

a. Pumps should be located in well-ventilated, open areas to prevent accumulation of toxic vapors. Location of such pumps under pipe racks should be avoided.
b. A trapped drain should be provided near the pump to safely carry away any process spills to a collection and control sump or tank.
c. Proper alignment (both internal and driver alignment with pump) is critical to avoid premature mechanical seal failure. Proper alignment of suction and discharge piping will also minimize mechanical seal failures.
d. Pumps and their associated suction and discharge piping should have foundations and supports that protect against damage caused by vibration and any static or dynamic loads.
e. Consideration should be given to installing remotely operated isolation valves at the supply tanks outlet nozzles in the suction lines to the pumps. If remote operation of a shutoff valve is provided, the shutoff valve must be interlocked to simultaneously shut down the pump motor. This is especially important for sealless pumps.
f. Where air-operated diaphragm pumps are used, flexible metal hoses should be used instead of expansion joints to connect the process piping to the pump nozzles. The flexible metal hoses should be long enough to have some slack so that they are not too rigid.

Protection of operating and maintenance personnel is of utmost concern when pumping or transferring highly toxic liquids. It is recommended that pump hoods be provided to take care of minor fugitive emissions and leaks. The hood is connected to a scrubber or adsorber by an exhaust fan. One pump shroud that is mentioned in an unpublished NIOSH report is designed so that half is permanently mounted, and the other half is movable so that the pump can be serviced, while maintaining airflow away from the maintenance worker. Pump hoods should be suitable if airflow is designed to provide at least 200 ft/min linear velocity at the junction between the pump and hood [22].

Maintenance workers should wear personnel protective clothing and wear respiratory protection equipment while servicing pumps handling highly toxic liquids.

An active and continuous monitoring and maintenance program should be instituted where highly toxic liquids are handled. This program should consist of the following:

Regular (beginning or end of a shift) visual inspection of all rotating shaft seals by process operators.
Routine (daily or weekly) visual inspection of shaft seals by a maintenance worker regularly assigned to this duty.
Monitoring of the seal area with direct-reading instruments.

II. TRANSFER OF GASES AND VAPORS

A. Introduction

Highly toxic gases and vapors can be transferred by several different types of compressors. Compressors are divided into two categories:

a. Dynamic compressors (continuous flow)
b. Positive-displacement (intermittent flow)

Dynamic compressors use a rotating element to accelerate a gas and to build pressure. These types of machines include centrifugal, multistage, axial, mixed flow, and scroll-type compressors. Positive-displacement compressors are machines in which volumes of gas are confined within a closed space and are elevated to a higher pressure by rotary or reciprocating motion that compresses the gas or vapor. Rotary compressors include sliding vane, liquid ring or liquid piston, two-impeller straight lobe, and helical or spiral-lobe machines. Both rotary and dynamic type compressors use the same sealing technology. The potential source for fugitive emissions is at the shaft–case and case split lines of the compressor. Reciprocating compressor types include trunk piston and cross head. Potential sources of emissions are at the cylinder heads, cylinder rod packing boxes, valve covers, valve unloaders, clearance pockets, and distance piece covers. Reciprocating compressors require a sealing technology that is different from rotating shafts.

To successfully apply the appropriate sealing concepts to gas compressors, careful consideration must be given to the support systems available at the plant site. The appropriate seal design, combined with the proper support system, will meet or exceed regulations concerning fugitive emissions. The system must be carefully selected and properly sized for the application.

To minimize or eliminate fugitive emissions from compressors handling highly toxic gases or vapors, compressor manufacturers provide special seal design features. The following sections describes these special seal design features and discuss applications of compressors for specific highly toxic chemical service. For additional details about compressor-sealing systems, refer to STLE Special Publication SP-32 [23].

B. Centrifugal Compressors

The following types of seals are used for centrifugal compressors: (1) labyrinth seals, (2) carbon ring seals, (3) bushing seals, (4) pumping bushing seals, (5) circumferential seals, (6) contacting face seals, and (7) noncontacting face seals (dry seals). Dry-running, noncontacting face seals have proved superior for applications involving highly toxic gases [24]. This seal may be used as a single, double, double-opposed, tandem, or triple-tandem seal. Double seals with a dry buffer gas (air or nitrogen) injection are normally used for such gases as chlorine and hydrogen chloride. Figure 7 shows a dry-running, noncontacting face seal. Details of compression of chlorine using centrifugal compressors are presented by White et al. [25].

Table 1 lists the various types of centrifugal compressor seals and their characteristics [23].

C. Reciprocating and Diaphragm Compressors

Positive-displacement compressors, such as the reciprocating and diaphragm type, are used for higher discharge pressures than centrifugal compressors.

Reciprocating compressors have several leak paths as follows: (1) cylinder rod packing, (2) distance piece cover, (3) valve cover, and (4) unloader and clearance pockets. The most common source of leakage is through the cylinder rod packing. Each of these leak sources can be greatly reduced by appropriate control measures, as indicated in Table 2 [23].

Diaphragm compressors are less susceptible to leaks than reciprocating ones and are recommended for highly toxic gases and vapors. They are available with double and triple diaphragms that can be monitored to detect any failure of a diaphragm or diaphragm seal, and interlocked to shut down the compressor. Diaphragm compressors have been used successfully for such highly toxic gases and

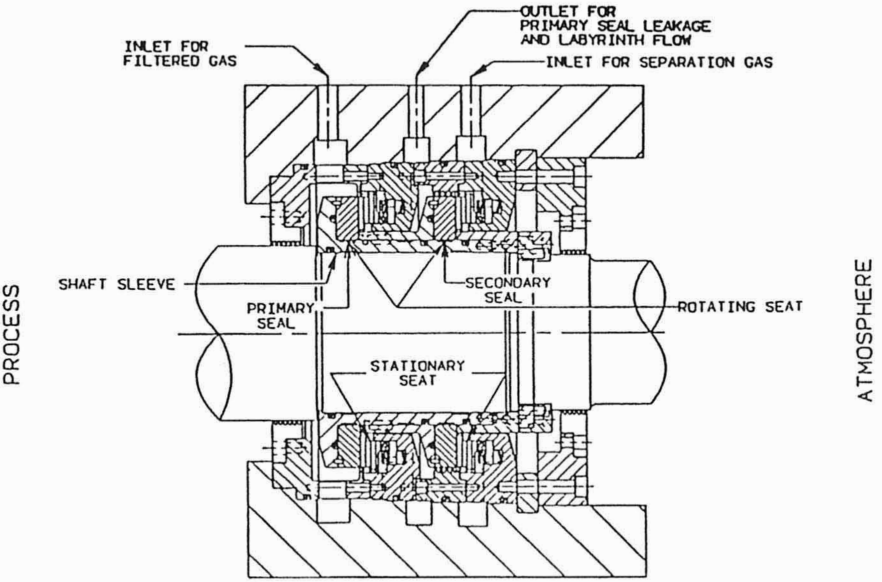

Figure 7 Dry-running noncontact face seal for centrifugal compressors.

vapors as ammonia, chlorine, hydrogen bromide, hydrogen chloride, and fluorine, to name several.

D. Liquid Ring Compressors

Liquid ring compressors are often used over a range from low-flow rates at moderate discharge pressures [up to 300 standard cubic feet per minute (scfm) at 130 psig] to high-flow rates at low-discharge pressures (up to 12,000 scfm at 15 psig). They have been used widely for chlorine compression in chlorine plants. For chlorine service, sulfuric acid is usually the seal liquid used.

For highly toxic gases and vapors a double mechanical seal, with a pressurized buffer liquid between the two seals should be provided.

E. Compressed Gas Cylinder Unloading

Compressed gases in small (100–150 lb. of gas) and large (1-ton) cylinders are frequently used. When gases are highly toxic, extreme caution in handling the cylinders and strict unloading procedures must be followed. Very useful information is available on unloading practices for small cylinders in the *Compressed Gas Handbook* [26].

Cylinders containing highly toxic gases should be placed in a ventilated enclosure for unloading. Toxic gas detectors and alarms located in and outside the

Table 1 Types of Compressor Seals and Requirements to Meet Emission Regulations

Seal type	Peripheral speed limit	Pressure limit	Temp limit	Leakage range	Support system to meet the requirement < 1000 ppm	Advantage	Disadvantage
Labyrinth	Limited by materials of contruction	Typically low[a]	High	2.8–2800 L/min (1.0–100 scfm)	• Buffer fluid • Bleed off • Vapor recovery system	• Ease of maintainability • Split assembly • Slight to no contact	• High operating cost • Limited radial movement • High leakage
Carbon ring		4140 kPa (600 psig)	Moderate	< 60% of labyrinth		• Long life • Tolerant of dirty gas • Unlimited axial movement • Low horsepower losses	• Some leakage into proces
Bushing	115 m/s (375 ft/s)	Typ < 4140 kPa[b] (Typ < 600 psig)	Low	Buffer liquid 40–75 L/day (10–20 gal/day)	• Buffer fluid • Bleed off • Vapor recovery system	• Ease of maintainability • Split assembly • Slight to no contact • Moderately dirty gas • Unlmited axial movement • Tolerant of press reversal	• High operating cost • Limited radial movement • Chemical compatibility • Medium horsepower losses • Medium heat generation
Pumping bushing	115 m/s (375 ft/s)	Typ < 4140 kPa[c] (Typ < 600 psig)	Low	Buffer liquid 4–20 L/day (1–5 gal/day)[d]	• Buffer fluid • Bleed off • Vapor recovery system	• Ease of maintainability • Split assembly • Unlmited axial movement • Tolerant of dirty gas	• Limited radial movement • Chemical compatibility • Medium horsepower losses • Medium heat generation

Circumferential (segmented)	190 m/s (600 ft/s)	690 kPa/stage (1–100 psi/stage)	Moderate	2.8–28 L/min (0.1–1.0 scfm)	• Buffer fluid • Bleed off • Vapor recovery system	• Ease of maintainability • Low heat generation • Low horsepower • Unlimited axial movement • Gas liquid or mixture • Split assembly • Low leakage • Low operating cost	• Moderately clean environment • Limited radial movement • Low pressures • Limited pressure reversal
Contacting face	135 m/s (450 ft/s)	<3400 kPa/stage (<500 psi/stage)	Moderate	Buffer fluid[e]	• Buffer fluid • Bleed off • Vapor recovery system • Tandem, double-opposed, triple-seal designs	• Ease of maintainability • Slight to no contact • Tolerance of dirty gas • Gas or liquid	• Medium operating cost • High horsepower or losses • Generates heat • Limited pressure reversal
Noncontacting face	170 m/s (550 ft/s)	<12,400 kPa/stage (<1800 psi/stage)	Moderate	0.28–85 L/min (0.01–3 scfm)	• Buffer fluid • Bleed off • Vapor recovery system • Tandem, double-opposed, triple-seal designs	• Ease of maintainability • No contact • Low operating bost • Low horsepower losses • Long life • Low leakage	• Clean environment • Limited pressure reversal

[a] <34 kPa (5psi) per knife edge; special designs to 340 kPa (50 psi).

[b] Special designs to 21 mpa (3000 psi) max.

[c] Special designs to 34 mpa (5000 psi)max.

[d] Pumping ring leakage increases when shaft is not rotating.

[e] Liquid 3–30 L/day (1–8 gal/day); gas 0.28–170 L/min (0.1–6 scfm).

Source: Ref. 23.

Table 2 Control of Fugitive Emissions from Reciprocating Compressors

Potential leak source	Control methods
Rod packing	Install wedge ring packing as required (pressure, intermediate or wiper packing boxes), with appropriate inert gas purge. Vent to acceptable recovery system or flare. Where appropriate, install soft, static seal packing to control emissions when compressor is not running.
Packing box (external)	Verify that mating surface or packing box bottom and cylinder have proper finish, and that o-ring materials are correct.
Distance piece and vent	Assure that gasket fit and bolt torques on covers are correct. If necesary, replace flat gasket with gasket eliminator material. Nitrogen purge distance piece and vent to flare. If distance piece can not be vented, vent to an acceptable vapor recovery system or use a hydrocarbon-absorbing charcoal canister.
Valve cover	Remachine valve cover to cylinder surfaces and replace metal or metal jacketed gasket with an o-ring.
Unloader and clearance pocket	Install multiple o-rings on shaft and at mating surfaces between unloader/clearance pocket and cylinder.

Source: Ref. 23.

enclosure (above or below depending on whether the gas or vapor is lighter or heavier than air) are recommended.

Figure 8 shows an installation for unloading 1-ton cylinders of phosgene [27]. Two cylinders are placed on separate scales and connected to piping by flexible metal hoses. Nitrogen is used to pressure the phosgene from the cylinders through the feed piping to the process. The piping is of double-walled containment construction.

Connection of phosgene cylinders to the feed system is done within an enclosed panel, which is constantly monitored (with phosgene levels recorded) for leaks. An alarm will sound at 0.1 ppm (the current threshold limit value; TLV). A glove box-type arrangement is provided to allow an operator to make the necessary connections without being exposed to possible leaks. However, operating valves are equipped with handles that protrude through the front shield without gas-tight seals. The enclosure is continually vented by an exhaust fan to a caustic scrub-

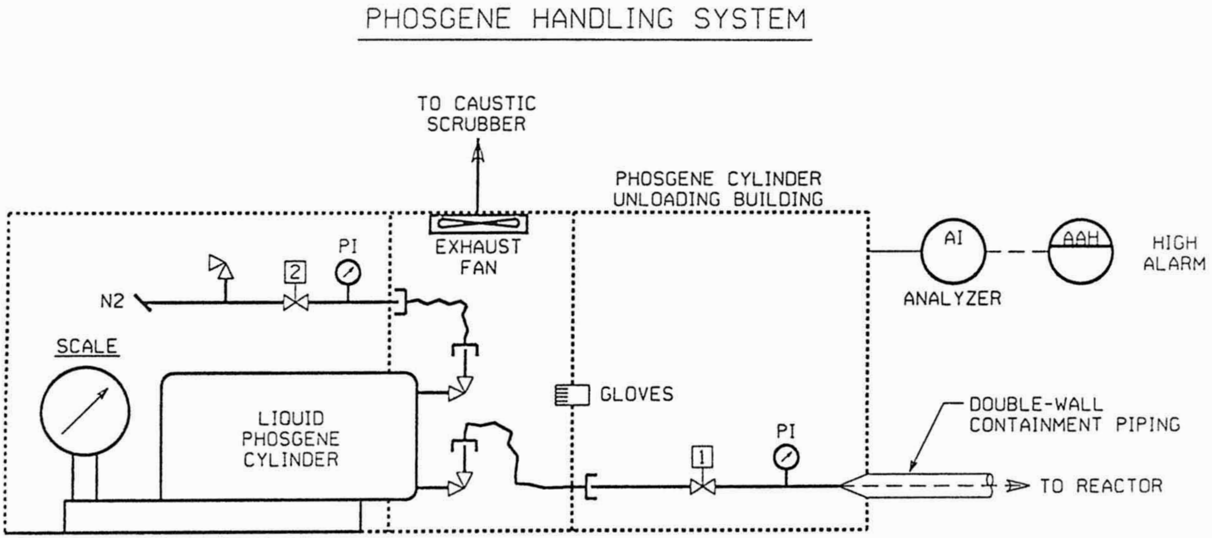

Figure 8 Unloading facility for 1-ton phosgene cylinders.

ber while work is being done on the cylinders. The scrubber exhaust is continuously monitored (and recorded) for phosgene. An effluent level of 2 ppm will trigger the area evacuation alarm system.

The phosgene-handling building is protected in front of the enclosure and at the doors with infrared personnel sensors. These devices detect unauthorized personnel at the building and, consequently, sound an alarm in the manufacturing area.

In a liquid spill from a cylinder, the building floor drains are connected to an underground tank for neutralization with 12% caustic soda. The building floor is provided with a lip to contain a spill.

This design can be used as well for 1-ton cylinders of other highly toxic gases and vapors.

F. General Safety, Occupational Health, and Maintenance Considerations

The following design features and operating and maintenance practices are recommended for compressors handling highly toxic gases and vapors:

a. Provide remotely operated, fire-safe, shutoff valves in the suction lines to compressors, to be used in case of a fire.
b. Design and properly support suction and discharge lines, especially for positive-displacement compressors, to minimize vibration problems.
c. Install toxic gas detectors in the sump area under compressors (if on a platform) and above them. They should sound an alarm and close the suction line block valve on detection of a leak.
d. Install exhaust ventilation pickup hoods at seals and other common leak points. The piping from the pickup hoods should be routed to a scrubber, flare, or incinerator.
e. Make sure that the proper materials of construction are selected, taking into account other components and impurities in the gas. For example, carbon steel is satisfactory for dry chlorine, but stainless steel must be used for wet chlorine.
f. Provide monitoring of bearings, seals, shaft vibration, and such, and interlock the detectors to shut down the compressor and driver if abnormal conditions occur. The following conditions should be monitored, according to Industrial Risk Insurers (IRI) [28]:

   Electric motors
   - High bearing temperature
   - High case temperature
   - Overload

- Loss of air purge (if required)
- Vibration
- Low and high voltage

Reciprocating compressors

- Low-suction pressure
- High-discharge pressure
- High-discharge temperature
- Vibration

Centrifugal compressors

- Low seal oil pressure
- Vibration
- Surge
- Low-suction pressure
- High-discharge temperature

g. Provide water spray protection if the gas or vapor is flammable as well as toxic.
h. Institute a preventative maintenance and inspection program, including a metals inspection and nondestructive-testing program.
i. Install safely relief valves in the discharge line between the compressor and the first discharge block valve for each stage of compression. Route the safety valve discharge line to a scrubber or flare system.
j. Install the compressor in a closed shed or room equipped with an exhaust fan actuated by a sensor on detection of a leak. The exhaust fan should route the leaking gas or vapor to a scrubber or flare.

III. TRANSFER OF BULK SOLIDS AND POWDERS

A. Introduction

Many bulk solids and powders are highly toxic (e.g., pesticides, herbicides, and fungicides). Great care must be taken to protect personnel who are involved in handling them both in their production and end-use. It should also be recognized that highly toxic bulk solids and powders may also be combustible, which could cause fires and explosions when they are being transported. Therefore, experimental tests should be conducted to determine these hazard potentials. Eckhoff [29] describes several of these tests. If experimental tests show that handling of these bulk solids and powders can result in fires and explosions, protective measures must be taken to prevent them, as a twofold hazard could occur, namely, physical damage to personnel and equipment, and severe physiological damage to the health of personnel in the vicinity.

B. Fire and Explosion Hazards

1. Causes of Fires and Explosions

A dust explosion results when finely divided combustible matter is dispersed into an atmosphere containing sufficient oxygen to permit combustion, and a source of ignition of appropriate energy is present. Dust explosions have certain similarities to gas explosions, especially relative to the chemical processes involved and if the particle size of the dust is smaller than 5 μm. However, there are significant differences that make the study of dust explosions extremely difficult. For a dust explosion to occur, a degree of turbulence must be present, if only to disperse the dust into a suspension. Gas explosions can occur when the gas is in a quiescent state, the mixture being homogeneous and consisting of molecular-sized particles. The suspensions of dusts encountered in dust explosions, however, are unlikely to be homogeneous, normally containing a range of concentrations of particles that are many orders of magnitude larger and heavier than gas molecules, and that settle out of suspension by gravity. The processes of a dust explosion involve such a high rate of combustion that individual particles and agglomerates are either consumed or oxidized. The combustion of carbon present in organic materials will produce gaseous products that, in themselves, take up more space than the solids of the parent material. In addition, an expanding flame front will result from the ignition of flammable gases produced by the decomposition of the dust. A dust explosion, therefore, produces a system that requires more space because of expansion of the hot gaseous products. In industrial plants, the heat released during a dust explosion is likely to exceed the natural rate of cooling and, consequently, an explosion would be accompanied by significant and, occasionally, uncontrolled expansion effects. In an unconfined situation, a dust explosion would mainly result in localized flames and pressure effects. However, in confined situations, such as those commonly found in plants handling particulate matter, the expansion effects are likely to be sufficient to burst through the confines of the plant equipment and piping.

Several conditions must be satisfied simultaneously for a dust explosion to occur:

a. The dust must be combustible.
b. The dust must be in suspension in the atmosphere, which must contain sufficient oxygen to support combustion.
c. The dust must have a particle size distribution that will propagate flame.
d. The dust concentration in the suspension must be within the explosible range.
e. The dust suspension must be in contact with an ignition source of sufficient energy.

If these conditions are satisfied, the hazard from a dust explosion depends on the explosibility of the dust, the volume and characteristics of the vessel or chamber containing the dust suspension, the dispersion and concentration of the dust suspension, and the degree of turbulence in the vessel.

Ignition sources of sufficient energy to cause a dust explosion are many, but the main ones are the following:

Flames
Hot surfaces
Incandescent material
Spontaneous heating
Welding or cutting operations
Friction heating or sparks
Impact sparks
Electric sparks
Electrostatic discharge sparks

Static electrical charges are probably the most common ignition source and can develop on conveyed bulk solids and powders, especially organic ones. These charges occur because of the contacts made between surfaces during the movement of particles. The charge on a powder particle is governed by three factors: (1) the charge production rate, (2) the charge leakage rate when the particle is in contact with a ground, and (3) the electrical breakdown of air initiated by the high field around the charged particle.

A good discussion of electrostatic spark hazards and methods of protecting against them is found in Glor's book [30].

2. Factors Affecting Explosivity

(a) Moisture. Explosion violence is usually reduced with increasing powder moisture content. In many instances, there are direct relationships between moisture content and the minimum ignition energy, the minimum flammable concentration, the maximum pressure developed during a deflagration, and the maximum rate of pressure rise [31].

(b) Presence of inert material. Inert gases, such as nitrogen and carbon dioxide, are often used to prevent ignition of powders by reducing the oxidant concentration. The addition of an inert diluent to a mixture of a combustible powder and oxidant (usually the oxygen in air) will affect the lower and upper flammability limits and the limiting oxidant concentration [32].

(c) Particle size. Generally speaking, the explosibility of a combustible dust is greater if the particle size is reduced. The minimum ignition energy is reduced and the maximum explosion pressure and rate of pressure rise are increased with a decrease in particle size. In addition, fine particles more readily stay in suspension than coarse particles so the probability of producing an explosible concentration is enhanced. Particles larger than about 500-μm diameter are usually unlikely to cause dust explosions, although the possibility of coarser materials producing fine dust by attrition during handling must be anticipated.

(d) Turbulence. Initial turbulence in closed vessels results in both higher maximum deflagration pressures and higher maximum rates of pressure rise than

would be obtained if the powder–oxidant mixture were at initially quiescent conditions.

3. Preventative and Protective Measures

Several preventative and protective measures are available to protect solids-handling transfer equipment against deflagrations (explosions). These include the following:

a. Deflagration venting
b. Control of oxidant concentration
c. Control of combustible concentration
d. Explosion suppression
e. Deflagration pressure containment
f. Spark-extinguishing systems

Refer to NFPA 68 [31] and NFPA 69 [32] for details on these methods.

Various informative and useful books on the subject of dust explosions are available. Among these are the books by Cross and Farrar [33], Palmer [34], Bartknecht [35], Field [36], Nagy and Verakis [37], and Eckhoff [29].

C. Mechanical Conveying and Conveyors

Mechanical conveyors for bulk solids and powders are available in a variety of types [38]. However, for highly toxic bulk solids and powders, only those types that can be made dust-tight are recommended, i.e., screw conveyors, bucket elevators, and drag conveyors (en-masse conveyors).

If a screw conveyor is selected, it should be specified with a dust-tight cover. Trough end shaft seals should also be specified to be dust leak-proof. This can be accomplished by injecting air or nitrogen into the packing gland seal. The shaft should be hard-faced where it fits into the packing gland. The shaft runout must be specified to the vendor to minimize shaft wear. They can also be operated under a slight negative pressure (connected to a ventilation system discharging to a baghouse).

From a dust explosion standpoint, screw conveyors have minimal free volumes, so that dust suspensions cannot usually form; thus, dust deflagrations are rarely a problem. However, sometimes, screw conveyors can jam, generating friction and becoming an ignition source if the motor is not shut down soon enough. This hazard can be minimized by installing an overload trip switch on the motor driving the screw.

Bucket elevators are also available in dust-tight construction for which additional sealing, as compared with standard construction, is provided by caulking between inside skip welds, and gaskets are provided for all bolted joints.

Bucket elevators have experienced explosions and fires when conveying explosible dusts, and numerous incidents have occurred in the past, particularly with agricultural powders, for which these elevators have customarily been used [34]. The reasons are that, because of its design, dust clouds are likely to be continuously present during working, particularly in the head and the boot of the elevator. Second, the buckets are regularly subjected to impact, and the belt supporting the buckets can slip on the pulleys and generate frictional heat. As a result, a source of ignition and a dust suspension can be present simultaneously, causing explosion or fire. Modern high-capacity elevators, with separate delivery and return legs, have a reduced risk because of the reduced volume per unit weight of dust conveyed. Generally, with explosible dusts, other types of elevators are preferable, and they are particularly necessary for dusts of more severe explosibility (e.g., those giving maximum rates of pressure rise in excess of 5000 lb/in.^2-s in small-scale test apparatus. Use of elevators should also be avoided for dusts known to be readily ignited by friction. Colijn [38] presents a good discussion of bucket elevator constructional features. Steps should be taken in the design of bucket elevators to minimize the generation of sources of ignition. These include the provision of strong attachments for the buckets and strong bearings for all shafts, external to the casing, provided with detectors for overheating. The main drive to the elevator should be external to the casing. Belt slip within the casing can be detected by belt speed meters, and antirunback devices should be installed. Development of friction within the casing can thereby be reduced.

For minimizing fires and explosions in an elevator handling explosible dusts, the elevator can be maintained under a nitrogen blanket. Also, nonsparking buckets (aluminum or plastic) and a casing fabricated of aluminum can be specified.

Exhaust ventilation can be applied to the casing of bucket elevators. Ventilation assists the removal of suspensions of dust in air, which would contain those dust fractions of smaller particle size, and also would give a slight negative pressure, relative to atmosphere, within the casing. The ventilation system should be connected to a dust collection unit in a safe area, which should be provided with explosion protection on a basis similar to that in the elevator casing itself. Care should be taken to ensure that the airflow is sufficient to prevent deposition of dust in the ducting to the collection unit, and also sufficient to permit the collector to function efficiently. Dust collection systems hazards are considered in more detail in Palmer's [34] and Bartknecht's [35] books.

Automatic explosion suppression should be used to protect bucket elevators, rather than deflagration venting, because venting would eject toxic dusts into the atmosphere. The design of the suppression system, which is a highly specialized technology, should be done by a qualified vendor.

Gillis and Fishlock [39] conducted experimental investigations on bucket elevator explosions to find means to limit their effect, or to extinguish the explosion. They found explosion suppression to be very feasible.

En-masse (drag) conveyors are also recommended for conveying highly toxic bulk solids and powders, as they are totally enclosed and can be designed to be dust-tight. They can thus be operated under a nitrogen blanket. They can also be operated under a slight negative pressure (connected to a ventilation system discharging to a baghouse).

The explosion hazard situation in en-masse conveyors is similar to that in bucket elevators, especially when operated vertically [34]. In the elevating leg, the channel will be full of material, probably above the upper explosive limit, but during start-up, or when the inlet is starved, an explosible concentration could occur. To prevent deflagrations, an explosion suppression system should be considered.

D. Pneumatic Conveying and Conveyor Systems

Pneumatic conveyors are used when bulk solids and powder have to be transferred over long distances. For highly toxic bulk solids and powders a closed loop, negative-pressure (vacuum) system, using nitrogen as the conveying gas, should be used (Fig. 9).

Pneumatic conveying systems normally have the greatest proclivity for dust explosions and fires among conveyors. This is so for the following reasons:

a. Generation of static electricity by contact between particles themselves and between particles and the pipe wall.
b. The possibility of dust concentrations within the explosible range at the delivery point where the dust is separated from the air (silos, cyclones, baghouses).
c. The possibility that heated particles created during a prior operation (e.g., grinding or drying) may be carried in a pneumatic transport system and fanned to a glow by the high air velocity. These heated particles can then cause an ignition in the storage or collection system at the end of the pneumatic conveyor. Tramp metal in pneumatic systems may also cause frictional heating or sparks as it is passed through the system.

Various design features can be provided that will reduce the potential for fires or explosions occurring. These include the following:

a. Providing piping strong enough to contain a deflagration.
b. Using flanged joints, rather than the conventional couplings used in standard pneumatic conveying piping.
c. Installing adequate grounding and bonding across joints to drain off static electrical charges that are generated by the flow of materials. Electrically isolated metallic objects within the system may accumulate dangerous static charges.
d. Providing an electrical installation meeting the electrical classification imposed by the conveyed materials as well as the surrounding environment.

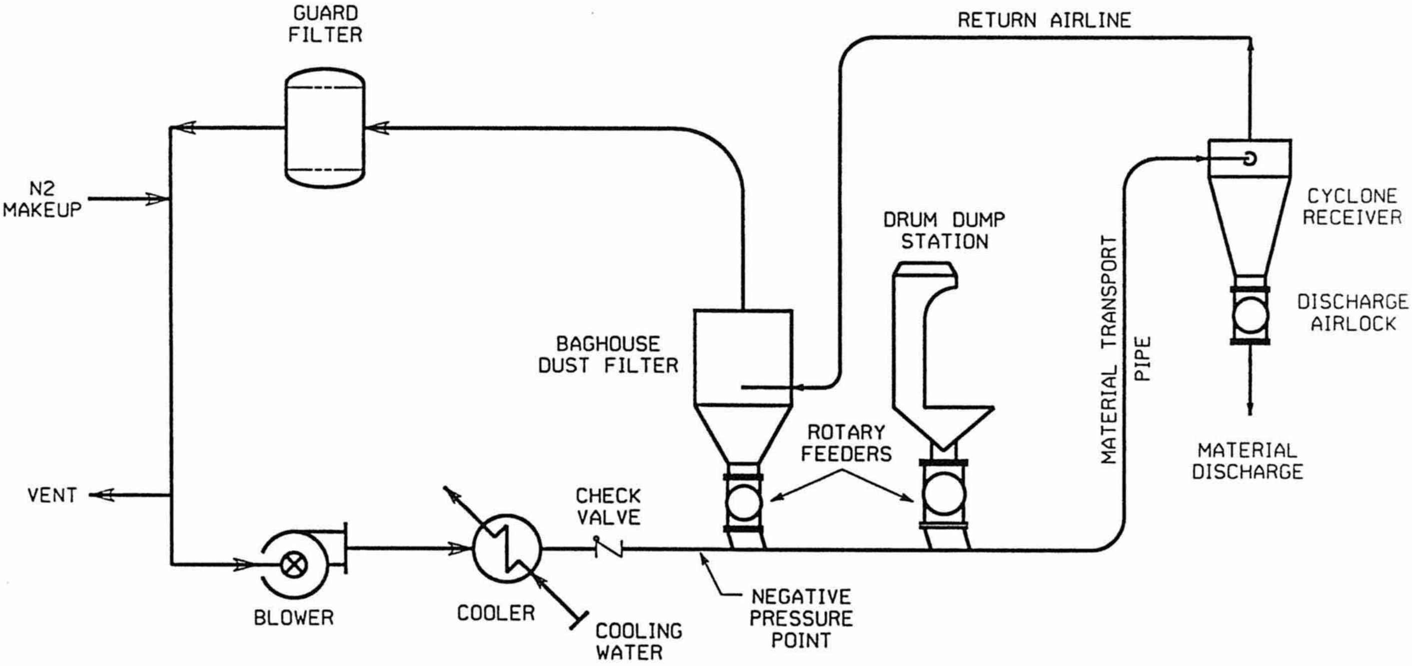

Figure 9 Closed-loop, negative-pressure conveying system.

e. Selecting materials of construction compatible with the materials handled and the surrounding environment.
f. Installing equipment such as screens, magnets, and metal detectors, upstream of the conveyor feed point for the detection or removal of any foreign material that might create an ignition source in the system.

E. Gravity-Flow Transfer

Highly toxic bulk solids and powders are often transferred from one piece of equipment to another at a lower elevation by gravity flow through a chute.

The chutework should be designed to contain a deflagration. Also, adequate grounding and bonding across flanges should be provided to dissipate any electrostatic charges that may accumulate during the flow of powder on the chute surface.

Another common type of gravity flow operation is the filling of railroad cars and tanker trucks with material from silos. For highly toxic bulk solids and powders it is recommended that special chutes, called loading spouts, be used for this purpose. A loading spout is a retractable chute with an integral dust-capture shroud that is connected to a baghouse dust filter and an exhaust fan. They are available from several bulk solids-handling equipment manufacturers. Figure 10 shows a typical loading spout.

F. Unloading of Drums and Bags

When unloading drums and bags of highly toxic bulk solids and powders into reactors or process vessels, care must be taken to prevent the dispersion of these materials into the working space where they could contact personnel or deposit on equipment and building members.

There are several methods for charging highly toxic materials from drums into reactors and process vessels. Among the options that are recommended are

a. Ventilated charge hopper with rotary discharge valve (Fig. 11).
b. Ventilated charge hopper with "double-dump" discharge valve (Fig. 12).
c. Proprietary drum dump station with integral dust filter and exhaust fan (Fig. 13).

For unloading bags of highly toxic materials, automatic bag-opening (slitting) machines are recommended. An operator places a bag on a conveyor, which is part of the machine, and the conveyor feeds the bag into the enclosed machine where it is opened (slit), emptied, and discarded. The empty bags are usually fed into a trash compactor. The dust generated in the enclosure is controlled by a integral dust filter. This isolates the worker from the dust generated by the bag-opening process. A good discussion of bag-opening machines is presented by Heitbrink and McKinney [40].

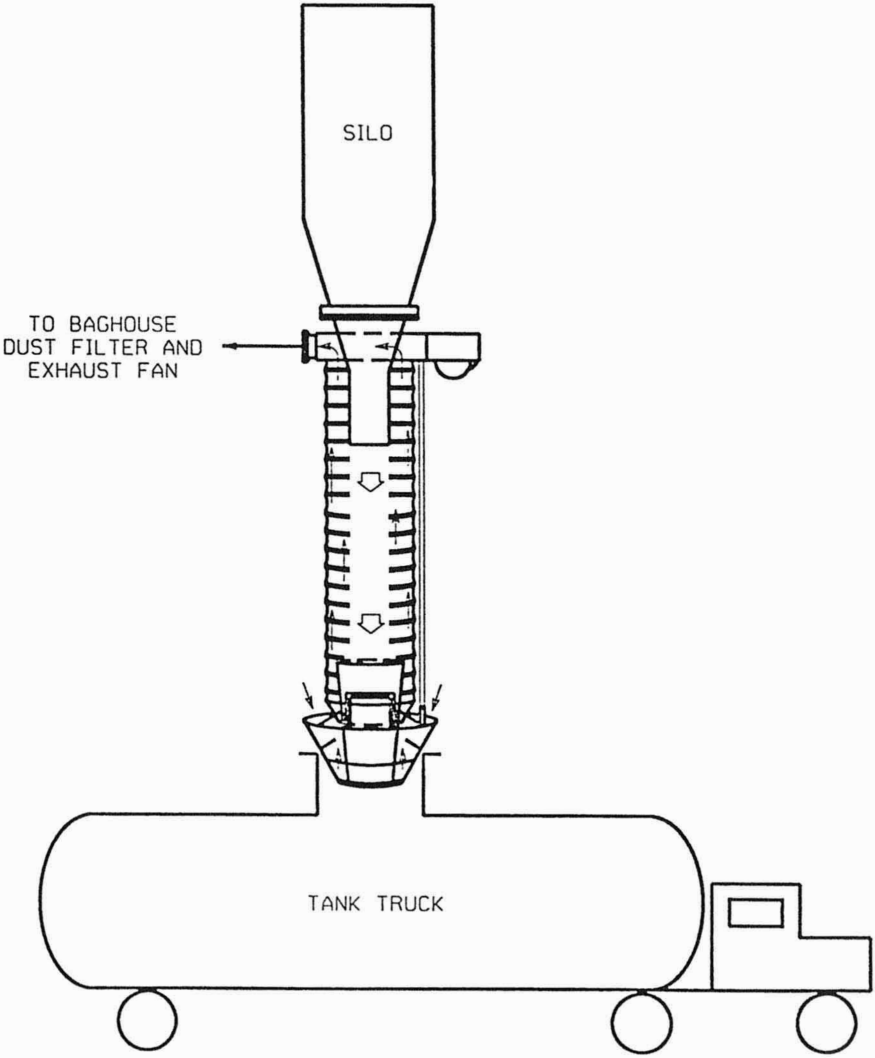

Figure 10 Typical loading-spout installation.

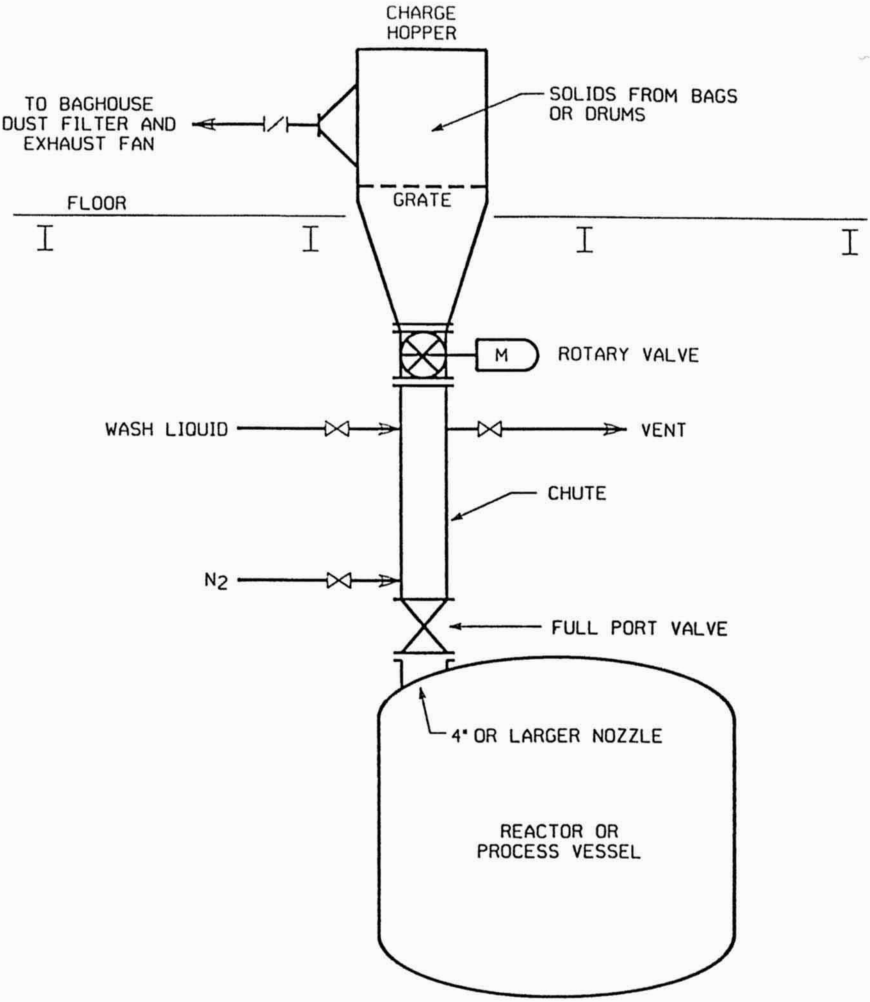

Figure 11 Charge hopper with rotary discharge valve.

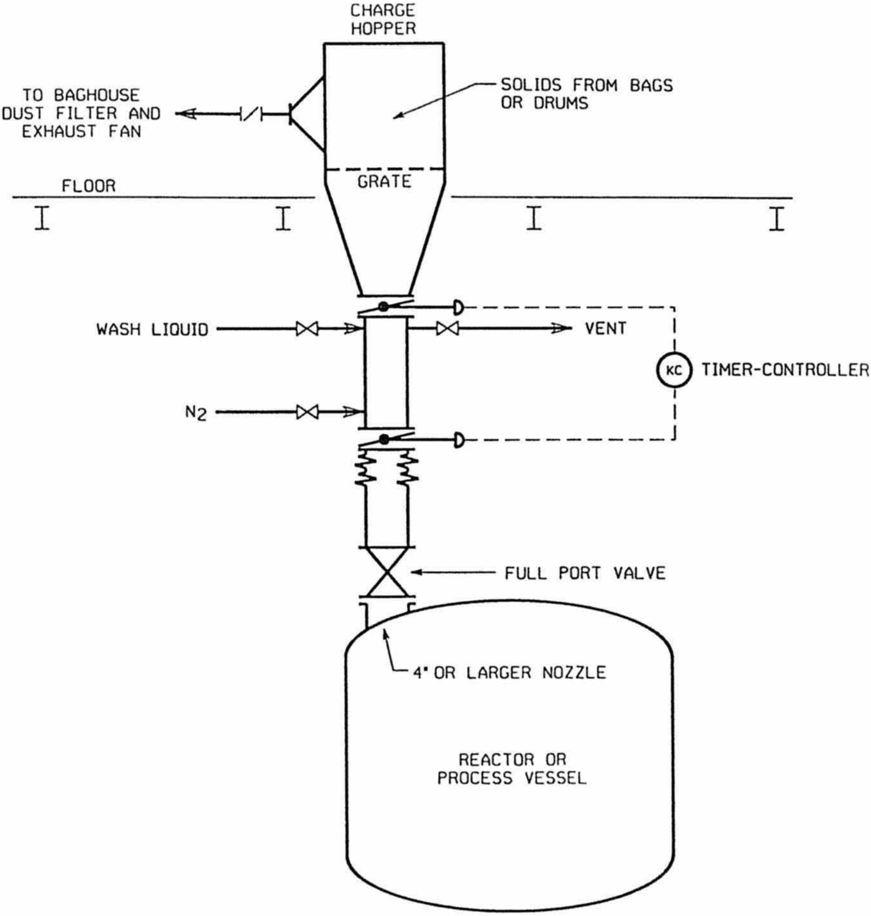

Figure 12 Charge hopper with "double-dump" discharge valves

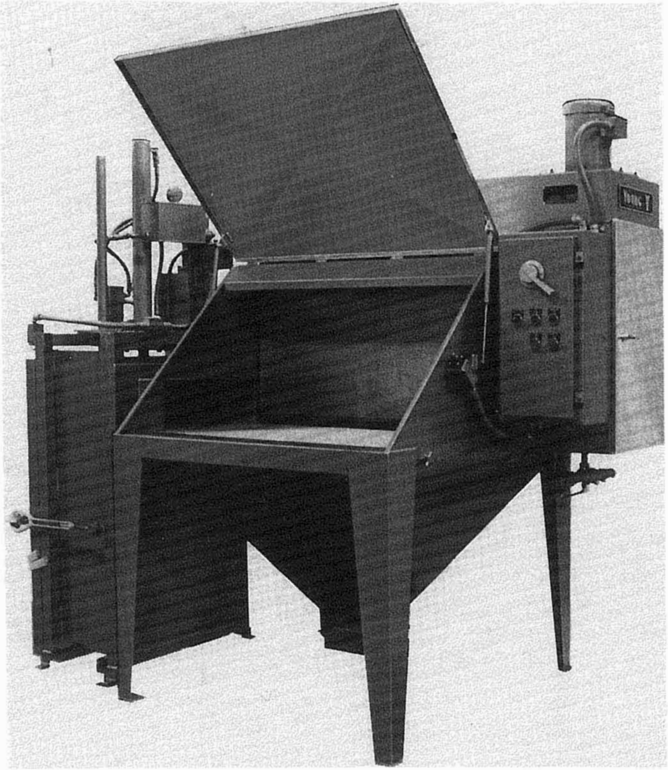

Figure 13 Proprietary drum dump station. (Courtesy of Young Industries, Inc.)

REFERENCES

1. J. T. McGuire, *Pumps for Chemical Processing*, Marcel Dekker, New York, 1990.
2. I. J. Karassik, and W. C. Krutzsch, *Pump Handbook*, 2nd ed., McGraw-Hill, New York, 1986.
3. J. P. Poynton, *Metering Pumps: Selection and Application*, Marcel Dekker, New York, 1983.
4. T. L. Henshaw, *Reciprocating Pumps*, Van Nostrand Reinhold, New York, 1987.
5. American Petroleum Institute (API), API Standard 610, *Centrifugal Pumps for Refinery Services*, 7th ed., API, Washington, DC, 1989.
6. Society of Tribologists and Lubrication Engineers, (STLE), Special Publication SP-30, *Guidelines for Meeting Emission Regulations for Rotating Machinery with Mechanical Seals*, STLE Park Ridge, IL, 1990.
7. G. Parkinson, and E. Johnson, *Chem. Eng.*, June: 30–37 (1989).
8. J. A. Reynolds, *Chem. Process.*, Nov: 71–75 (1989).
9. H. J. Schommer, and T. Johnson, T., Proc. 7th International Pump Users Symposium, Texas A&M University, 1990.
10. T. Newby, and D. Forth, *IChemE Symp. Ser.* 124; 119–134 (1991).
11. J. McCallion, *Chem. Process.*, Dec: 16–20 (1991).
12. CP Staff, *Chem. Process.*, July: 46–49 (1992).
13. A. Nasr, *Chem. Eng. Prog.*, Nov: 31–34 (1992).
14. S. Nilavalagan, M. Ravindran, and H. C. Radhakrishna, *Chem. Eng. J.*, 39:97–109 (1988).
15. G. S. Biasutti, and E. Camera, *Loss Prevention*, 8, 123–125 (1974).
16. Hoechst Celanese Corporation, private communication.
17. G. F. Bennett, and F. S. Feates, eds., *Hazardous Materials Spills Handbook*, McGraw-Hill, New York, 1983.
18. W. Unterberg, R. W. Melvold, S. L. Davis, F. J. Stephens, and F. G. Bush III, *How to Respond to Hazardous Chemical Spills*, Noyes Data, Park Ridge, NJ, 1988.
19. CCPS, Equipment design, *Guidelines for Engineering Design for Process Safety*, AIChE Center for Chemical Process Safety, New York, 1993, Chap. 4.
20. Olin Corporation, *Monomethyl Hydrazine Handling and Storage* [brochure].
21. L. Bretherick, *Handbook of Reactive Chemical Hazards*, 3rd ed., Butterworth Publishers, Boston, 1985.
22. SRI International, "Control technology assessment of the pesticides manufacturing and formulating industry" unpublished report to NIOSH, May, 1980.
23. Society of Tribologists and Lubrication Engineers (STLE), Special Publication SP-32, *Guidelines for Meeting Emission Regulations for Compressors with Advanced Sealing Systems*, STLE, Park Ridge, IL, 1992.
24. J. L. Dulak, Machine design, Mar. 8:58–59 (1990).
25. I. F. White, G. J. Dibble, J. E. Harker, and T. F. O'Brien, *Modern Chlor-Alkali Technology*, Vol. 3, Ellis Horwood, Chichester, UK, 1986, Chap. 8.
26. Compressed Gas Association (GCA), *Handbook of Compressed Gases*, 3rd ed., GCA, Arlington, VA, 1990.
27. R. Bianchi, and J. Alspach, *Plant Operations Prog.*, 3:40 (1984).

28. Industrial Risk Insurers (IRI), IRI IM. 17.3.2, *Guiding Principles for Loss Prevention and Protection of Gas Compressor Stations*, IRI, Hartford, CT, 1990.
29. R. K. Eckhoff, *Dust Explosions in the Process Industries*, Butterworth-Heinemann, Boston, 1991.
30. M. Glor, *Electrostatic Hazards in Powder Handling*, John Wiley & Sons, New York, 1988.
31. National Fire Protection Association (NFPA), NFPA 68, *Venting of Deflagrations*, NFPA, Quincy, MA, 1993.
32. National Fire Protection Association (NFPA); *Explosion Prevention Systems*, NFPA, Quincy, MA, 1992.
33. J. Cross, and D. Farrar, *Dust Explosions*, Plenum Press, New York, 1982.
34. K. Palmer, *Dust Explosions and Fires*, Chapman & Hall, London, 1973.
35. W. Bartknecht, *Dust Explosions—Course, Prevention, Protection*, Springer-Verlag, Berlin, 1989.
36. P. Field, *Dust Explosions* Vol. 4, *Handbook of Powder Technology*, Elsevier, Amsterdam, 1982.
37. J. Nagy, and H. C. Verakis, *Development and Control of Dust Explosions*, Marcel Dekker, New York, 1983.
38. H. Colijn, *Mechanical Conveyors for Bulk Solids*, Elsevier Science Publishing, New York, 1975.
39. J. P. Gillis, and F. H. Fishlock, Explosion venting and suppression of bucket elevators, *J. Powder* and *Bulk Solids Technol.*, 6(2):5–16 (1982).
40. W. A. Heitbrink, and W. N. McKinney, Jr., *Powder Bulk Eng.*, May:40–52 (1987).

9

Containment and Disposal of Effluent Streams from Emergency Pressure Relief Devices

Stanley S. Grossel
Process Safety & Design, Inc., Clifton, New Jersey

I. INTRODUCTION

When an effluent stream from an emergency relief device (safety valve and rupture disk) contains a highly toxic chemical, it cannot be released directly into the atmosphere, as is the practice with common, nontoxic streams. It must be sent to some type of disposal equipment that will render it harmless, commonly a scrubber or flare system. In addition, if the stream is multiphase (vapor–liquid or vapor–liquid–solid), it must be routed to some type of separator or blowdown drum (catch tank) to separate the vapors from the other components before the vapors go to a scrubber or flare system.

In this chapter, we will briefly discuss the requirements for pressure relief devices and the various types used in industry. Then, the remainder of the chapter will be devoted to a discussion of separation and containment equipment and disposal equipment and systems.

II. OVERPRESSURE RELIEF REQUIREMENTS

There are many possible causes of overpressure that can occur in chemical plants, petroleum refineries, pharmaceutical plants, or other facilities handling highly toxic chemicals. The following list covers several of the more obvious causes of overpressure:

a. Exposure of process vessels to external fires (perhaps the most frequent hazard)

b. Exposure of storage vessels and pipelines to strong sunlight
c. Equipment failure (such as pumps, compressors, and heat exchangers tube failure)
d. Reflux failure on a distillation column
e. Excessive operating heat input or high pressure as a result of some control failure
f. Failure of cooling water supply (e.g., to the jacket of a chemical reactor or to a heat exchanger)
g. Loss of utilities (electric power, instrument air)
h. Valve failure (e.g., locking in the open or closed position)
i. Accumulation of noncondensibles in a condenser
j. Mixing of hot and cold streams (water with hot liquid or light hydrocarbons into hot liquids)
k. Runaway chemical reactions
l. Blocked outlets (e.g., inadvertent valve closure) on reciprocating compressors, pumps, turbine exhausts, distillation columns, and heat exchangers
m. Dust explosions inside vessels

A good discussion of these overpressure causes is presented in API RP521 [1].

After having established a list of feasible overpressure scenarios for a system, the engineer must then determine the maximum possible loading (i.e., flow rate) to be handled by a relief device.

III. TYPES OF PRESSURE RELIEF DEVICES AND RELIEF SYSTEMS

The most commonly used pressure relief devices are pressure relief valves and rupture disks. A more recent pressure relief device is the rupture pin valve. A brief discussion of these will be presented.

A *spring-loaded pressure relief valve* is a pressure relief device designed to automatically reclose and prevent the further flow of fluid.

A *relief valve* is a spring-loaded pressure relief valve actuated by the static pressure upstream from the valve. The valve opens normally in proportion to the pressure increase over the opening pressure. A relief valve is used primarily with liquids.

A *safety valve* is a spring-loaded pressure relief valve actuated by the static pressure upstream from the valve and characterized by rapid opening or pop action. A safety valve is normally used with compressible fluids.

A *safety relief valve* is a spring-loaded pressure relief valve that may be used as either a safety or relief valve, depending on the application.

A *conventional pressure relief valve* is a spring-loaded pressure relief valve the performance characteristics of which are directly affected by changes in the backpressure on the valve.

A *balanced pressure relief valve* is a spring-loaded pressure relief valve that incorporates a means for minimizing the effect of backpressure on the performance characteristics.

A *pilot-operated pressure relief valve* is a pressure relief valve in which the main valve is combined with and controlled by an auxiliary pressure relief valve.

A *rupture disk* is a nonreclosing differential pressure relief device actuated by inlet static pressure and designed to function by bursting the pressure-containing rupture disk. A rupture disk device includes a rupture disk and a rupture disk holder.

A *rupture pin valve* is a device in which a piston and plate, subjected to the system pressure, is held in place by a pin. When the axial force on the plate reaches a critical value (the pin rupture force), the pin buckles, and the piston and plate instantly move to a full-open position.

A good discussion and description of these relief devices is presented in API RP520 [2] and by Parry [3]. These two books also discuss, in detail, sizing methods for relief devices handling single-phase fluids, and installation procedures and practices.

When the relief effluent stream is multiphase (vapor–liquid or vapor–liquid–solid), the relief device should not be sized by the conventional methods. Experimental data, which are required for sizing and design of the relief device and vent piping, should be obtained in a suitable adiabatic calorimeter. These data include rate of temperature rise, rate of pressure rise, vapor- and liquid-phase flow rates, physical characteristics of the effluent stream (foamy, gassy, hybrid). A discussion of the various adiabatic calorimeters used to determine these data is presented in the *DIERS Project Manual* [4]. After the foregoing data have been obtained, the relief device and vent piping can be sized using methods such as presented in the *DIERS Project Manual* [4] and the article by Simpson [30].

Relief systems can be classified in accordance with the following cases:

a. Single relief devices discharging directly to the atmosphere.
b. Single relief devices discharging to control equipment (flare, scrubber, or other).
c. Multiple relief devices discharging to a collection header and subsequently to control equipment.

When the relief device effluent is a multiphase one, it usually must be routed to a separation vessel to separate the vapor-phase from the liquid-phase (or liquid- and solid-phases). Alternatively, if the vapors of a multiphase stream are very soluble or condensible in water or some other solvent, they can be sent to a totally enclosed quench tank where the vapors are condensed out. The following sections will discuss selection and design considerations and methods for containment, separation, and final disposal equipment (i.e., scrubbers and flares).

IV. BLOWDOWN DRUMS (CATCH TANKS), CYCLONE SEPARATORS, AND QUENCH TANK

A. Types of Equipment

For handling highly toxic releases, the following types of equipment are used in the chemical industry.

1. Horizontal Knockout Drum or Catch Tank

The horizontal knockout-type drum, shown in Fig. 1, combines both the vapor–liquid separation and holdup functions in one vessel. Horizontal drums are commonly used when space is plentiful, such as in petroleum refineries and petrochemical plants. The two-phase mixture usually enters at one end and the vapor exits at the other end. For two-phase streams with very high vapor flow rates, inlets may be provided at each end, with the vapor outlet at the center of the drum, thus minimizing vapor velocities at the inlet and aiding vapor–liquid separation.

2. Cyclone Knockout Drum with Separate Catch Tank

The cyclone-type blowdown system, shown in Figs. 2 and 3, is frequently used in chemical plants where plot plan space is limited. The cyclone performs the vapor–liquid separation, while the catch tank accumulates the liquid from the cyclone. This arrangement allows location of the cyclone knockout drum close to the reactor so that the length of the relief device discharge line can be minimized. The cyclone has internals, vital to its proper operation, which will be discussed later.

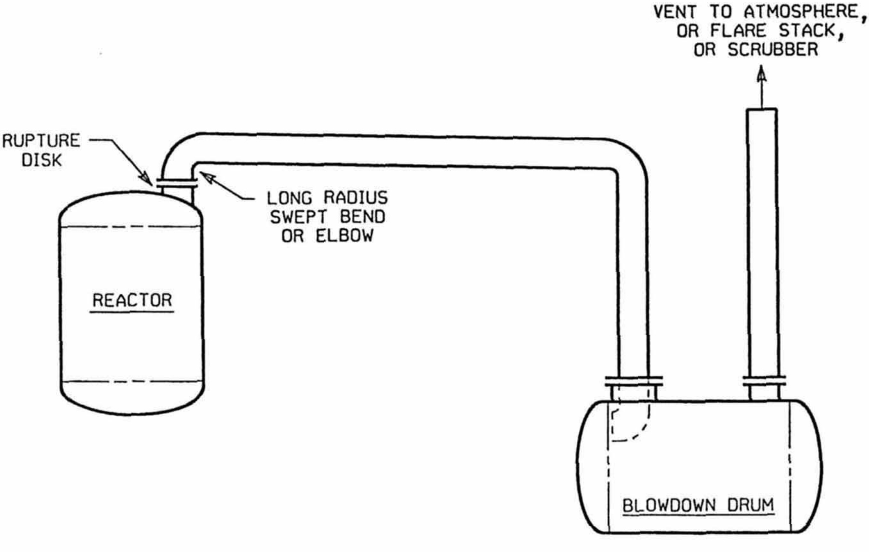

Figure 1 Horizontal Blowdown Drum.

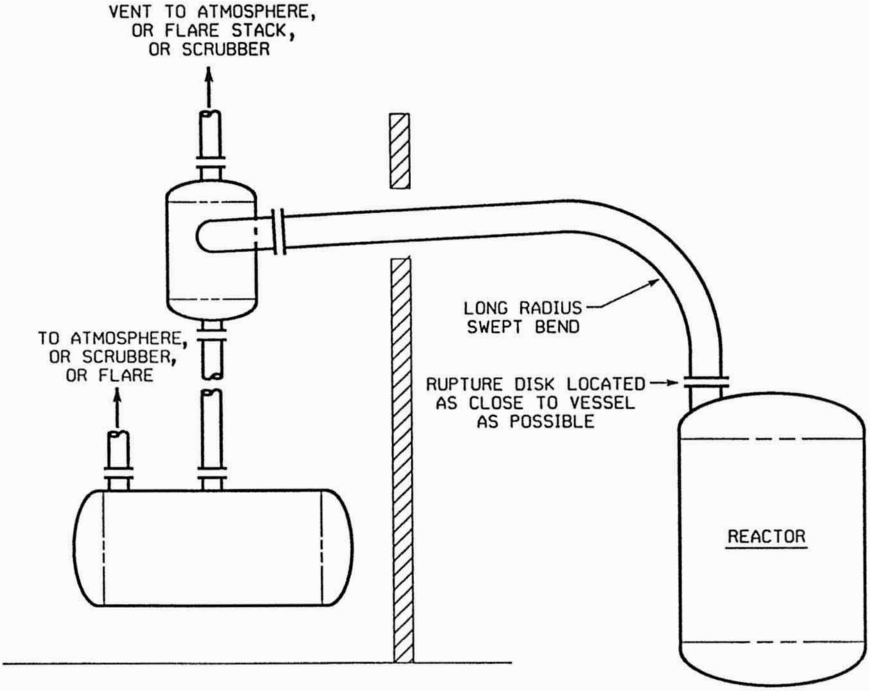

Figure 2 Tangential inlet knockout drum with separate liquid catch tank.

3. Cyclone Knockout Drum with Integral Catch Tank

The integral-type containment system (Fig. 4) is similar to the foregoing type, except that the knockout drum and catch tank are combined in one vessel shell. This design is used when the vapor rate is quite high so that the knockout drum diameter is large.

4. Quencher Knockout Drum and Catch Tank

The quencher-type system (Figs. 5 and 6) is used when it is desired to remove condensible vapors from a flammable or toxic vent mixture by passing them through a pool of liquid in the vessel. This arrangement often obviates the need for a subsequent scrubber or flare stack. The design of the quencher arm is critical to efficient condensation and avoidance of water hammer. Figure 5 is the more conventional "passive" type quenching pool used in the chemical and nuclear industry. The type shown in Fig. 6, with a superimposed baffle-plate section, is used when complete condensation of the vapors is not expected. This type is often used in petroleum refineries.

5. Multireactor Knockout Drum and Catch Tank

The interesting system, depicted in Fig. 7, is sometimes used as the containment vessel for a series of closely spaced reactors [5]. By locating the drum, as shown

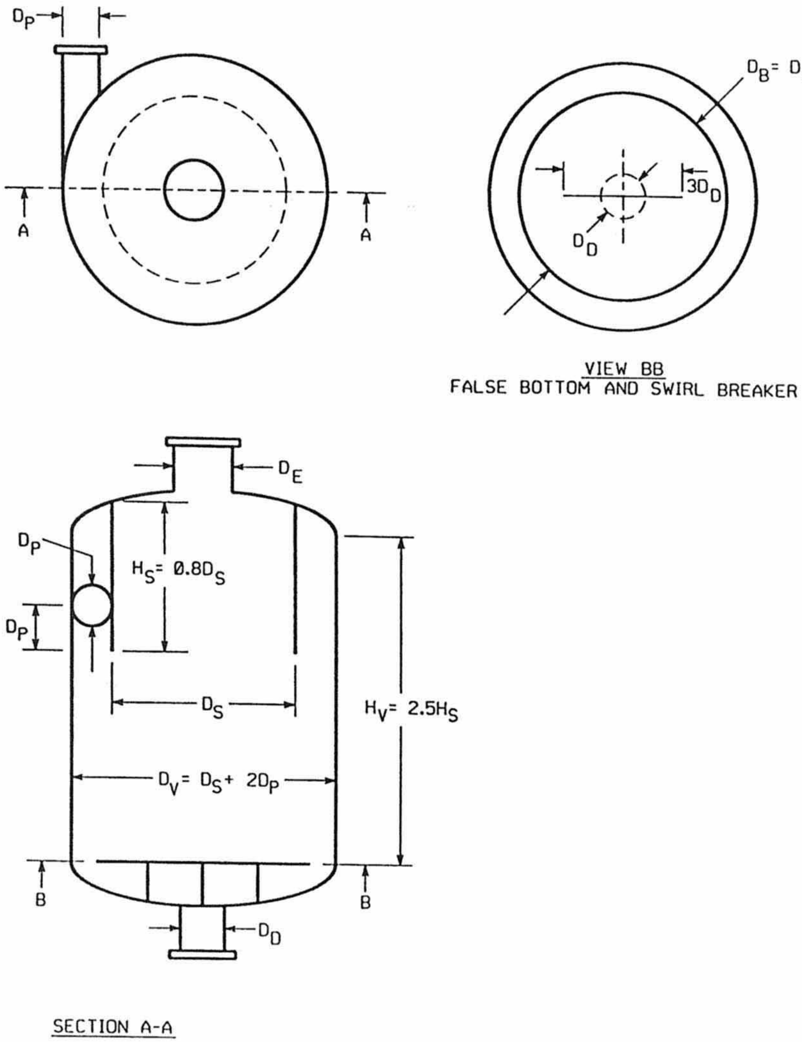

VIEW BB
FALSE BOTTOM AND SWIRL BREAKER

SECTION A-A

Figure 3 Cyclone knockout drum.

in Fig. 7, minimum length vent lines can be routed directly to the vessel without any bends.

B. Equipment Selection Criteria and Guidelines

Several factors should be considered to determine when to select a blowdown drum, cyclone separator, or quench tank to handle a multiphase stream from a

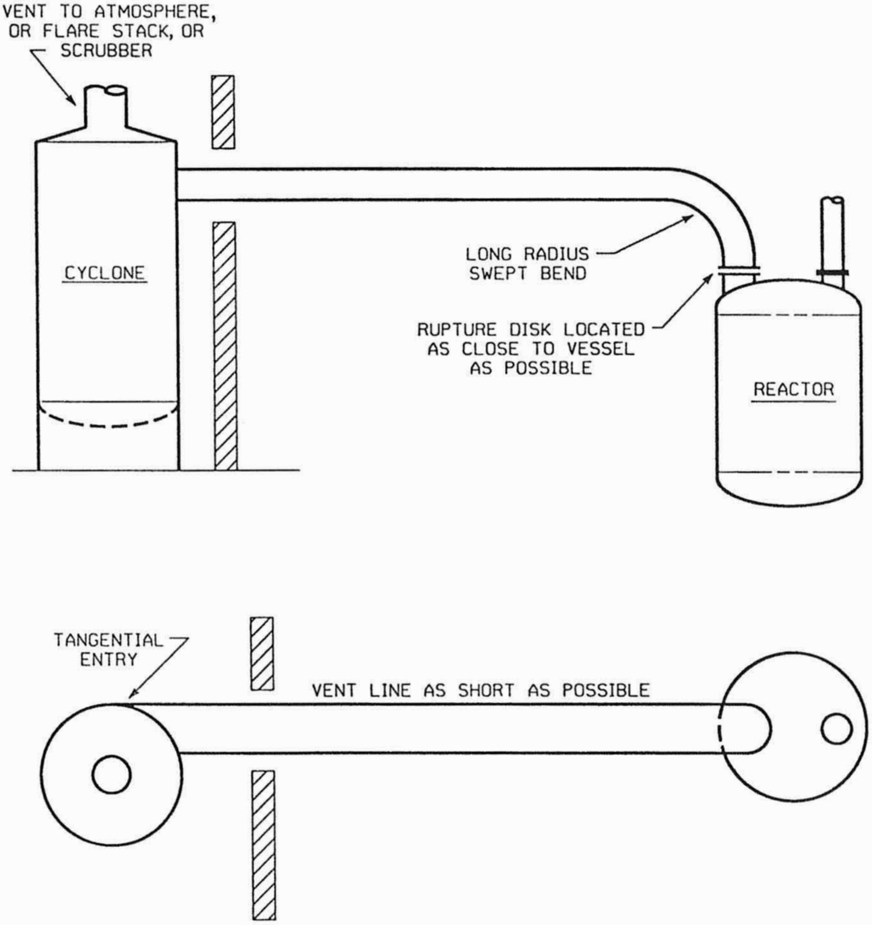

Figure 4 Vertical blowdown drum with tangential inlet-combined knockout drum and catch tank.

relief device. Among these are the plot plan space available, the operating limitations of each type, and the physico-chemical properties of the stream.

The criteria for application and performance characteristics of blowdown drums, cyclone separators, and quench tanks are discussed in the following.

1. Horizontal Knockout Drums (Catch Tanks)

a. Applications

Inlet liquid loading greater than 20 wt % based on gas flow rate.
Can be used for viscous or fouling service.

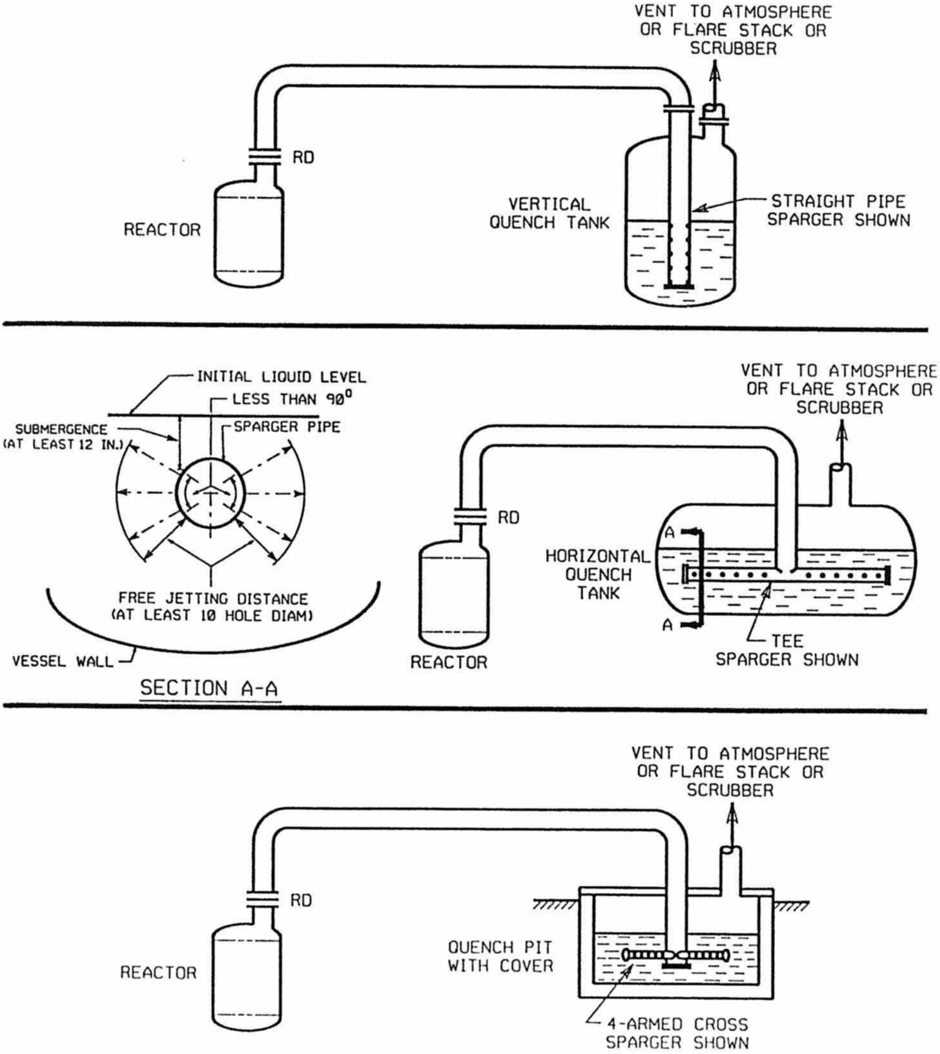

Figure 5 Quencher knockout drum catch tank.

b. Performance characteristics

Residual entrainment in the range of tenths to a few percent.
Pressure drop is usually very low.
Efficiency of separation is weakly dependent on the size of the vessel.
Usually able to separate droplets of 300 μm and larger.

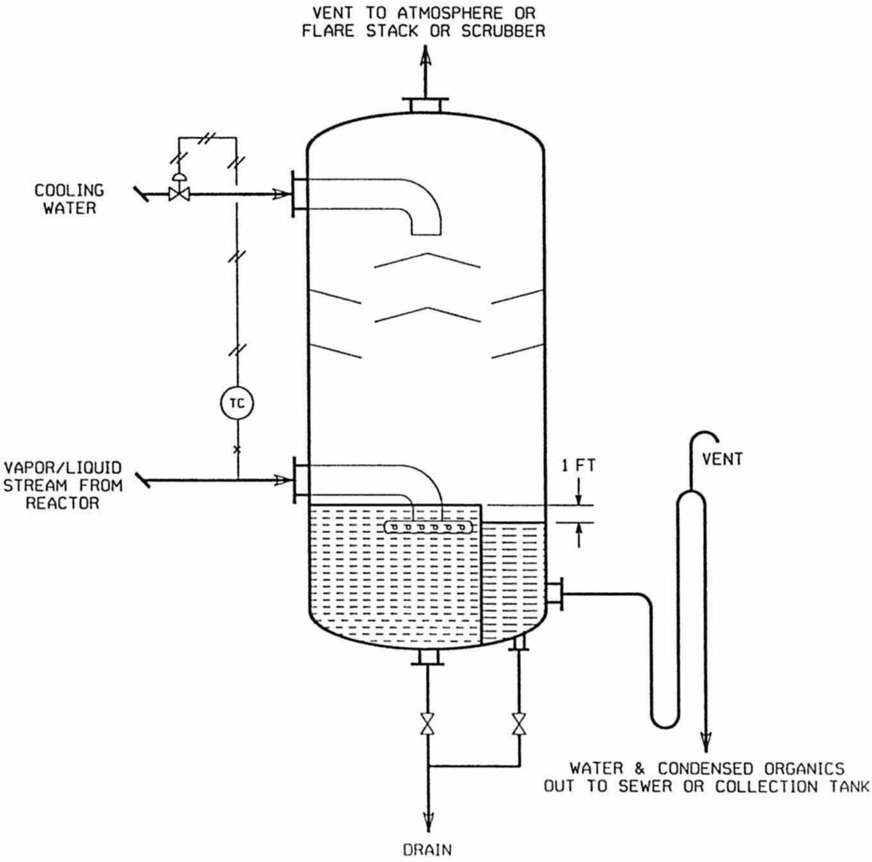

Figure 6 Quench tank with direct-contact baffle tray section.

2. Cyclones

a. Applications

Can handle liquids with low to moderate viscosity.

Some fouling is acceptable.

Inlet liquid loading is generally less than 20 wt %, based on the gas flow rate, but higher loadings are sometimes possible.

b. Performance characteristics

Higher separation efficiency than a horizontal knockout drum.

Pressure drop higher than a horizontal knockout drum.

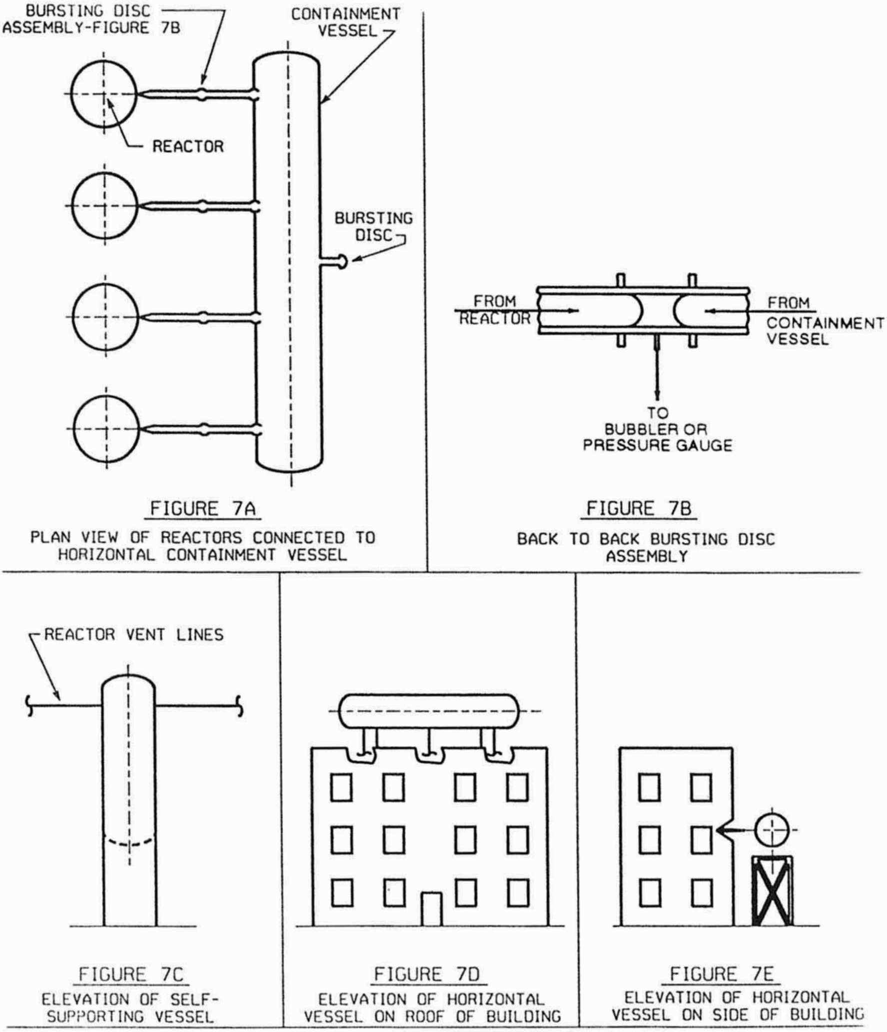

FIGURE 7A
PLAN VIEW OF REACTORS CONNECTED TO HORIZONTAL CONTAINMENT VESSEL

FIGURE 7B
BACK TO BACK BURSTING DISC ASSEMBLY

FIGURE 7C
ELEVATION OF SELF-SUPPORTING VESSEL

FIGURE 7D
ELEVATION OF HORIZONTAL VESSEL ON ROOF OF BUILDING

FIGURE 7E
ELEVATION OF HORIZONTAL VESSEL ON SIDE OF BUILDING

Figure 7 Multireactor knockout drum/catch tank.

3. Quench Tanks

a. Applications

Can handle liquids with low to high viscosity.

Can handle liquids with moderate solids loading.

Can handle high liquid loadings; actually no limit, as vessel can be sized to contain all the liquid.

b. Performance characteristics
   1. Quenching only saturated vapors with no inerts.
      1.1 Cold quench liquid.
      Sparging will condense the vapors effectively.
      Sudden vapor condensation in the pool may cause water hammer if the holes are too big and the pressure drop is too low. Sonic hole velocity is desirable to avoid this problem.
      1.2 Hot, nearly saturated quench liquid.
      Sparging may not condense all the vapor. The injection of cold liquid spray in the vapor space should be considered.
      Sudden vapor condensation in the pool is a minor problem.
   2. Quenching only saturated vapors with some inerts.
      2.1 Sparging may be ineffective in condensing all the condensible vapor.
      2.2 A mass transfer device, such as a packed or trayed contact section, should be considered (see Fig. 6).
   3. Quenching two-phase mixtures
      3.1 High volumetric vapor/liquid ratios ($r > 10$).
      The sparger design can be based on all vapor flow, but the heat balance must include the liquid.
      3.2 Moderate volumetric vapor liquid ratios ($1 < r < 10$).
      The liquid may inhibit the mass transfer rates needed to condense the vapors; therefore, sparging may be less effective.
      Sudden vapor condensation is of less concern.
      3.3 Low volumetric vapor/liquid ratios ($r < 1$).
      The mixture acts like a liquid and the vapor condensation is dependent on jet mixing. This will require a different type of sparger design.

C. Sizing and Design of Equipment

The information in the following sections that pertain to the sizing and design of blowdown drums (catch tanks) and cyclone separators are for normal liquid–vapor systems (low-viscosity and nonfoamy or unstable foams). They are not applicable to high-viscosity (newtonian and non-newtonian) liquids or systems that exhibit surface-active foaming behavior, as no information is now available about the separation efficiency for these types of equipment. Quench tanks can usually handle high-viscosity liquids as well as stable foams.

1. Horizontal Blowdown Drum (see Fig. 1)

There are two main criteria used in sizing horizontal blowdown drums or catchtanks, namely, (1) the diameter must be sufficient to effect good vapor–liquid separation; (2) The total volume must be sufficient to hold the estimated amount of liquid carryover from the reactor. For a foamy discharge, the holding volume should be greater than the reactor liquid volume (to be discussed further later).

One design method for sizing a horizontal blowdown drum is presented in API RP521 [1]. This requires a somewhat tedious trial-and-error design procedure. Another procedure, that has been used in industry by many companies, may be used to size horizontal blowdown drums and is as follows:

a. Calculate the allowable vapor velocity, U_a

$$U_a = k\sqrt{\frac{\rho_L - \rho_v}{\rho_v}} \tag{1}$$

where: U_a = allowable vapor velocity (ft/s).
ρ_L = liquid density (lb/ft^3).
ρ_V = vapor density (lb/ft^3).
k = capacity coefficient.

Values of k reported in the technical literature have ranged from 0.157 to 0.40. A k value of 0.27 has resulted in conservatively sized blowdown drums, able to separate liquid droplets 300 mm in diameter and larger.

b. Calculate the vapor flow area, A_v

$$A_v = \frac{Q_v}{U_a} \tag{2}$$

where: A_v = vapor flow area (ft^2).
Q_v = vapor flow rate (ft^3/s).

c. Assume A_v occupies half of the drum area, so that the drum diameter is:

$$D_d = \sqrt{\frac{2A_v}{0.785}}, \text{ ft} \tag{3}$$

d. Determine the drum volume occupied by liquid V_L based on the following criteria:

(1) For nonfoaming systems, V_L should be equal to the maximum working volume of the reactor.

(2) For mildly foaming systems that rapidly defoam, V_L should be a minimum of 1.5 times the maximum working volume of the reactor. Experimental data may indicate that V_L has to be even larger than this.

e. Ignoring both heads, calculate the drum length, L:

$$L = \frac{2V_L}{0.785D_d^2} \tag{4}$$

where: V_L = drum liquid volume (ft^3).
L = drum length (ft).

f. If the drum length is two to three times the diameter, the design is satisfactory. If L is greater than $3D_d$, assume a larger diameter and repeat the calculation until a satisfactory L/D_d ratio is achieved.

Another equation for "quick sizing" of horizontal knockout drums or catchtanks is presented by Tan [6]. He recommends the following equation for calculating the drum diameter:

$$W = 360D^2\sqrt{(\rho_L - \rho_v)MP/T} \tag{5}$$

where: W = vapor flow rate (lb/h).
D = drum diameter (ft).
ρ_L = liquid density (lb/ft^3).
ρ_v = vapor density (lb/ft^3).
M = molecular weight of the vapor.
P = pressure in the drum (psia).
T = temperature of the vapor (°R).

The author states that this equation is valid for the design of knockout drums that can separate liquid droplets of 400 μm and larger.

2. Cyclone Knockout Drum with Separate Catch Tank (see Figs. 2 and 3)

The sizing of a cyclone knockout drum for emergency relief systems is somewhat different from sizing a cyclone separator for normal process service for the following reasons:

a. In normal process service, the superficial vapor velocity at the inlet of tangential-entry vapor–liquid separators is limited to about 120–150 ft/s. Higher velocities may lead to:
Excessive pressure drop in the separator and in the inlet piping.
Generation of fine mist in the inlet piping which escapes collection in the separator.

b. Inlet velocity restrictions do not apply in the design of separators for emergency relief systems because
Pressure drop is usually not a penalty.
Escape of fine mist can usually be tolerated.

(*a*) *Sizing procedure.* The cyclone is sized by choosing a superficial F-factor for the skirt in the range of 5.0–8.0. The higher value may be used for water-like liquids; the lower value for liquids such as molasses. If design F-factors exceed the range 5–8, the liquid draining down the skirt is entrained and escapes with the vapor. These F-factors were determined in small-scale laboratory experiments using water and a high-polymer solution as the test liquids. The high-polymer solution had a viscosity that was "molasses-like," probably in the range of 1500 cp. There were no liquids of intermediate viscosities used in the tests.

The *F*-factors of 5.0 and 8.0 are conservative in the opinion of the researcher who performed the experiments [7].

The *F*-factor is defined as follows:

$$F = V_g \sqrt{\rho_g} \tag{6}$$

$$F = \frac{G_g}{\sqrt{\rho_g}} \tag{7}$$

where: V_g = superficial velocity (ft/s).
ρ_g = vapor density (lb/ft^3).
G_g = superficial mass flux (lb/sft^2).

Use of the *F*-factor in the entrainment correlation stems from the equation for the drag force on a spherical drop:

$$D_F = C_D \frac{\pi d^2}{4} \times \frac{\rho_g V_g^2}{2g_c} \tag{8}$$

$$= C_D \frac{\pi d^2}{4} \times \frac{F^2}{2g_c} \tag{9}$$

where D_F = drag force (lb force).
C_D = drag coefficient (dimensionless).
d = drop diameter (ft).
g_c = conversion constant (32.174 $\mathrm{lb_m ft/lb_f s^2}$).
π = 3.1416.

The design procedure is as follows:

a. Calculate G_g

$$G_g = F\sqrt{\rho_g}, \ \text{lb/s-ft}^2$$

b. Calculate the skirt flow area

$$A_s = \frac{W}{3600 G_g}, \ \text{ft}^2$$

where: W = vapor flow rate (lb/h).

c. Calculate skirt diameter

$$D_s = \sqrt{\frac{A_s}{0.785}}, \text{ ft}$$

d. Calculate all the other separator dimensions from the relationships given in Fig. 3.

When the pressure relief device is set to open at above 15 psig (critical flow will result), it is normally not necessary to be concerned about the pressure drop in the separator.

However, when the relief device set or rupture pressure is low (e.g., less than 15 psig), the pressure drop should be checked. The equation for the pressure drop in the cyclone (including ΔP for the inlet and outlet nozzles) is as follows:

$$\Delta P_s = 0.015\, \rho_g V^2 \tag{10}$$

where: ΔP_S = pressure drop across separator (in. H_2O).
ρ_g = gas density (lb/ft^3), at separator inlet pipe pressure.
V = gas velocity in the inlet pipe to separator (ft/s).

If the liquid is to be drained from the separator during the emergency blowdown, a vortex breaker and false bottom should be used (see Fig. 3, BB).

If the liquid contents of the vented vessel are to be retained in the separator for subsequent disposition, the holdup capacity may be increased by increasing the height of the vessel to increase the total volume by an amount equal to the vented liquid volume.

(*b*) *Special considerations*. If the vapor rate is high, the size of the cyclone separator may become so large it becomes difficult to install it in the space available near the reactor. In this situation, to reduce the size of the separator, it may be operated at a higher pressure during the blowdown by imposing resistance to flow in the vapor discharge pipe. For this purpose, it is convenient to use a restricting orifice located between flanges at the vapor outlet nozzle. Increasing the pressure in the separator reduces the vapor volumetric flow rate and increases density. Both effects reduce the diameter of the skirt and the other related dimensions by virtue of the *F*-factor–sizing parameter. The choice of a heavier-walled, smaller vessel may be based on space or economic considerations. However, the effect of the increased backpressure on the performance of the relief device must be checked. Remember that the back pressure for conventional safety valves is limited to 10% of the set pressure.

Saturated vapor leaving the separator may condense on the walls of the stack. If the blowdown period is long, and if the stack velocity is high enough (in excess of 20 ft/s), some of the condensate will be entrained with the exit vapor and fall out as rain. If this is not tolerable, a positive remedy is to insulate and steam trace the stack to keep its temperature continuously above the dew point. A cheaper, but less positive alternative, is to use a skimmer-type separator at the stack tip to capture a creeping film on the wall and drain it externally.

3. Cyclone Knockout Drum with Integral Catch Tank (see Fig. 4)

The diameter of the knockout drum is calculated by the criteria given in the prior section and Fig. 3. Since the liquid is also to be retained in the vessel, extend the shell height below the normal bottom tangent line to increase the total volume by an amount equal to the volume of the liquid carried over.

4. Quencher Knockout Drum and Catch Tank (see Figs. 5 and 6)

(*a*) *General.* There is very little information in the open technical literature on the design of quencher knockout drums or catch tanks in the chemical industry. What is available deals with the design of quench tanks (also called suppression pools) for condensation of steam or steam–water mixtures from nuclear reactor safety valves. Information and criteria from quench tanks in the nuclear industry can be used for the design of quench tanks in the chemical industry. Recently, Keiter presented two excellent papers on the design of a self-pressurizing, nonvented quench tank to collect and contain the emergency discharge from a polymerization reactor in the 4,000–16,000-gal size range [8, 9]. The papers discuss the small-scale experiments conducted, the computer simulation model that was based on the small-scale tests, and the design criteria and methodology for the full-scale quench drum. A more comprehensive write up on this subject appears in a CCPS guidelines book [10]. Some of the following material is from this guidelines book.

(*b*) *Design criteria.* The following sections will discuss pertinent criteria for quench tank sizing and design.

Operating pressure. There are three modes of operation of a quench tank: atmospheric pressure operation, nonvented operation, and controlled-venting operation.

Atmospheric operation is usually feasible when the effluent being emitted has a bubble point well above the maximum ambient temperature. A very small quantity of vapor escapes with the air that is displaced as the tank fills with the emergency discharge (typically about 0.2% of the reactor contents). Depending on the toxic or flammable properties of the vapor, the vent from the quench tank can be routed to the atmosphere, or must be sent to a scrubber or flare.

In nonvented operation, no material is vented to the atmosphere, and this design is used when complete containment of the discharge is required. It is also used when the discharge mixture bubble point is close to or below the maximum ambient temperature. The tank design pressure is relatively high, since the initial air in the tank is compressed by the rising liquid level, adding to the vapor pressure. The designer must take into consideration that the quench tank backpressure must be limited, such that it will not adversely affect the reactor relief system.

In a controlled-venting operation, the quench tank pressure is maintained at a desired level by a pressure controller–control valve system or pressure relief valve. This mode of operation is used when the discharge mixture bubble point is close to or below the maximum ambient temperature and it is desired to limit the maximum quench tank pressure.

Quench liquid selection. The choice of the appropriate quench liquid depends on several factors. Water is usually the first quench liquid to consider, since it is nontoxic, nonflammable, compatible with many effluent vapors, and has excellent thermal properties. If water is selected as the quench liquid, the tank should be located indoors, if possible, to avoid freezing problems. If the tank has to be located outdoors in a cold climate, the addition of antifreeze is preferable to heat-tracing the tank, since overheating the tank can occur from tracing, thereby reducing its effectiveness.

If other quench liquids are required, the liquid should have as many of the following properties as possible: compatibility with the discharge effluent, low vapor pressure, high specific heat, low viscosity, low flammability, low freezing point, high thermal conductivity, immiscibility with the discharge effluent, low cost, and ready availability.

Quench liquid quantity. A good discussion of the factors determining the quantity of quench liquid required is presented by CCPS [10]. When water is used as the quench medium, and the effluent stream is a hydrocarbon or organic compound, separate liquid phases are often formed. In this situation, heat transfer is the predominating mechanism during the quench. To achieve effective heat transfer, there must be a sufficient difference between the quench liquid temperature and the bubble point of the incoming effluent stream. The minimum temperature difference occurs at the end of the discharge, when the quench pool temperature is highest. A rule of thumb, from industry practice, is to allow a 10–20°C ΔT. For atmospheric tank operation, the final quench liquid temperature is then set 10–20°C below the normal boiling point of the final quench pool mixture. For nonvented or controlled-venting operation, the final boiling point is elevated, permitting a greater design temperature rise and the use of less quench liquid. Therefore, the quench pool final temperature must be set 10—20°C lower than the saturation temperature of the discharge effluent at the design maximum quench tank pressure.

The minimum capacity of quench liquid can be estimated by a heat balance, knowing the final quench pool temperature. The following equation given by Fauske [11] can be used to calculate the minimum amount of quench liquid:

$$m = \frac{m_0 (T_R - T_a) C_R}{(T_a - T_0) C_q} \tag{11}$$

Where m_0 is the mass of reactants, T_R is the temperature of reactants at relief set pressure, T_a is the allowable temperature following complete quench, T_0 is the initial temperature of the quench fluid, and C_q and C_R are the specific heat of the quench fluid and reactants, respectively (consistent English or SI units).

Equation (11) assumes the reaction is completely quenched immediately after the relief point is reached. This behavior is closely approximated, if the reaction stops in the quench pool, and the reactor empties quickly and thoroughly. If the reaction continues in the quench pool, the temperature T_R should be increased to the maximum adiabatic exotherm temperature. Occasionally, an experiment is necessary to confirm that the reaction indeed stops in the quench pool.

It is good practice to provide 10–20% more quench liquid than the minimum amount calculated.

Quench tank volume. The total volume of the quench tank should be equal to the following volumes:

a. Quench liquid required
b. Liquid entering in multiphase effluent stream
c. Liquid condensed from vapors in entering effluent stream
d. Freeboard for noncondensibles (a minimum of 10% is recommended)

Quench tank geometry. Quench tanks can have any of the following three geometries:

a. Horizontal cylindrical vessel
b. Vertical cylindrical vessel
c. Concrete pit (usually rectangular)

Usually, the geometry is determined by space limitations. Both horizontal or vertical cylindrical vessels are designed as pressure vessels, and for pressures up to 50 psig, an L/D ratio of 2–3 results in an economical design.

Sparger design. The effluent stream should be discharged into the quench liquid by means of a sparger, which breaks it up into small jets to provide good heat and mass transfer. The sparger design must also incorporate the following features:

a. Maximize momentum-induced recirculation in the quench pool
b. Provide adequate flow area (cross-sectional for pressure relief without imposing high backpressure)
c. Minimize shock due to vapor bubble collapse
d. Minimize unbalanced momentum forces

Figure 5 shows conventional quench tank sparger arrangements. As can be seen in this figure, the sparger can be of the following types:

a. Vertical straight-pipe sparger
b. Tee sparger
c. Four-armed cross-sparger

The following design criteria are recommended:

a. For effluent streams consisting of only liquid and vapor, hole diameters ranging from 1/8 to 1/2 in. are recommended. Larger hole diameters (up to 2 in.) may be required if the blowdown stream contains solids (polymers or catalyst). However, the violently collapsing vapor bubbles create a water hammer effect that increases in severity with hole size.
b. Sonic hole velocity is desirable in smaller holes and is essential in 1/2- to 2-in. holes. A minimum sparger pressure drop of 10 psi should be used.
c. The total quencher arm (sparger) hole area should be 1.2–1.5 times the relief device vent line cross-sectional flow area. In multiple arm spargers, it is recommended that the total cross-sectional flow area of the sparger arms be at least 1.2 times that of the relief device vent pipe flow area, to minimize the pressure losses caused by flow turning.
d. To balance high-velocity momentum forces, a symmetric sparger design must be used. This can be a vertical straight pipe, a tee-shaped or a cross-shaped quencher arm configuration, with rows of holes on opposite sides of the pipe, which helps to balance piping forces (see Fig. 5). This arrangement also enhances the momentum-induced recirculation of quench liquid and maximizes the temperature difference for heat transfer. A center-to-center hole spacing of greater than three hole diameters is recommended, which will minimize the coalescence of the discharging jets into larger, less effective jets.

The quencher arm should be anchored to prevent pipe whip. It should also extend to the length (for horizontal vessels) or the height (for vertical vessels) of the vessel to evenly distribute the vapors in the pool.

When quenching effluents that are discharged by safety valves, it is preferable to use a straight, vertical sparger, with holes in the end-cap as well as in the pipe side walls. This is recommended to minimize the possibility of liquid hammer, which can occur more readily in horizontal spargers. The liquid hammer usually occurs for the following reasons: As the relief valve opens for the first time, the pressure spike is cushioned by the air trapped in the vent line. This air is blown out. If the valve recloses, the line may cool, causing slugs of condensate to accumulate. When the valve reopens, the slugs will accelerate to very high velocities and impact on any elbows and end-caps of the sparger. In severe cases, the sparger arm end-caps can be knocked off. The foregoing recommendation avoids turns, and the holes in the end-cap provide some relief from the pressure spike.

(*c*) *Mass transfer contact section.* Where there is a strong possibility that not all of the incoming vapors will be condensed in the pool, a direct contact mass transfer section is superimposed on the quench tank. This can be a baffle-tray section (as shown in Fig. 6) or a packed column section.

The design of direct-contact mass transfer columns is discussed in detail by Scheiman [12,13] and by Fair [14]. The following sections summarize a design procedure for a baffle-tray mass transfer section:

A typical baffle column contains segmental baffles, 50% cut (i.e., with no overlap). The baffles should have some slope if the liquid contains solids. Experience shows that a well-designed baffle column can handle slurries and fouling-prone systems without difficulty.

Allowable vapor capacity of a baffle column is based on entrainment flooding, with maximum allowable vapor velocity based on window area or curtain area, whichever is limiting:

$$U_{c,\,\max} = 1.15\sqrt{\frac{\rho_L - \rho_v}{\rho_v}} = \frac{Q}{A_c} \tag{12}$$

$$U_{w,\,\max} = 1.58\sqrt{\frac{\rho_L - \rho_v}{\rho_v}} = \frac{Q}{A_w} \tag{13}$$

where: $U_{c,\,\max}$ = maximum allowable velocity in curtain area (ft/s).
$U_{w,\,\max}$ = maximum allowable velocity in window area (ft/s).
ρ_L = liquid density (lb/ft^3).
ρ_v = vapor density (lb/ft^3).
Q = vapor rate (ft^3/s).

The lower of the two limiting values is controlling. Both are limiting when the window area equals twice the curtain area, or for a 50% baffle cut, this is approximately a baffle spacing of 20% of column diameter.

5. Multireactor Knockout Drum or Catch Tank (see Fig. 7)

(*a*) *Vessel sizing.* The area needed for vapor disengaging is calculated by the equations given in Sec. IV.C.1 on horizontal blowdown drums. The diameter and length (or height) are determined by considering several factors, as follows:

a. The length should be sufficient to extend beyond the locations of the reactors discharging into the vessel, to simplify discharge pipe runs (for a horizontal vessel).
b. The height should not greatly exceed the height of the building (for vertical vessels).

c. The diameter should be sufficient to allow attenuation of the shock wave leaving the deflector.
d. The diameter should be sufficient to allow installation of the pipes and deflector plates in a way such that they do not interfere directly with one another (particularly important for vertical vessels).
e. The increasing cost of pressure vessels as the diameter increases.
f. An upper limit to diameter set by the need to transport complete cylindrical sections from manufacturer to site.
g. The volume of liquid in the reactor or reactors (assuming more than one vents at the same time).

(*b*) *Mechanical design considerations.* The paper by Speechly et al. [5] discusses several pertinent design features, as follows:

a. Each vent device discharge pipe is extended into the vessel, and its end is fitted with a deflector device. This disperses the jet stream of solids (catalyst) and liquids discharged and dissipates this force, which otherwise would be exerted on the vessel wall immediately opposite.
b. The deflector device (baffle plate) must be carefully designed, as described by Woods [15].
c. To isolate the catchtank from both reaction loads and forces generated by thermal expansion of the pipes, the pipes can be designed to enter the vessel through a sliding gland. Depending on layout, vessels that tend to have shorter, stiffer pipes between the building and the vessel may also require flexible bellows to be incorporated in the pipes.
d. There are usually several reactors linked to a single catch tank. To ensure that rupture of a disk on one reactor does not affect the others, each reactor is fitted with a double-rupture disk assembly.

The use of double-rupture disks in this application requires installation of a leak detection device in the space between the two disks, which must also prevent a pressure buildup from occurring within this space. Otherwise, under some circumstances, it is possible for a pinhole type leakage in one disk to cause a pressure to be retained in the space between the two disks. In this event, the pressure at which the disks would rupture could be increased significantly. This condition, therefore, could render ineffective the protection of the reactor system itself.

D. General Mechanical Design Considerations

1. Vent Piping from a Pressure Relief Device

The discharge piping from the rupture disk or safety valve to the knockout drum or catch tank should be as short and as straight as equipment layout conditions permit. The ideal arrangement would be that shown in Fig. 7, for which there are no elbows in the piping run. However, this arrangement is very seldom found in practice, and the next best piping arrangement is that shown in Fig. 2, for which there is only one, long-radius elbow. If several elbows are required, they should be adequately braced to withstand thrust and bending moments generated by the flowing vapor–liquid mixture. A good discussion of these problems and restraint design considerations is presented by Chambard [16].

2. Vessel Mechanical Design and Safety Considerations

(*a*) *Vessel design features and considerations.* The following design features are recommended as good-engineering practice [1]:

a. Provide a high-level alarm.
b. Provide a manhole for tank entry and cleaning.
c. Provide a pump for transferring the accumulated liquid to subsequent rework and recovery or disposal.
d. Provide an antivortex baffle above the liquid outlet line to the pump.
e. Design the catch tank for a minimum design pressure of 50 psig. The is based on the safety factor of 4 for the maximum allowable tensile stress values listed in ASME Section VIII, Division 1. A vessel designed to this pressure should be able to withstand a deflagration without rupturing (however, it may deform or "bulge" somewhat). Some petroleum companies specify a design pressure of 125–150 psig. The need to design vessels to withstand deflagrations is discussed by Noronha et al. [17]. The NFPA Standard 69 also contains a discussion on this subject [18].
f. The nozzles, attachments, supports, and internals of a catch tank or knockout drum must be designed to resist the shock loadings that result from thermal effects, slugs of liquid, or gas expansion.

Besides the nozzle reaction forces and vessel recoil forces discussed in the foregoing, several other "blowdown loads" should be considered to ensure good mechanical design and integrity of the relief system.

For the reactor vessel, there is the possibility of an "impact force" caused by slug formation and a "wave force" during transient buildup. A wave force can also occur in piping owing to spatial accelerations.

In a containment vessel (blowdown drum or catch tank), a "jet force" caused by quasi-steady jet impingement can occur. In containment vessels with suppression pools, there are three forces to consider:

a. *Impact force*: a transient force caused by impact of fluid mass.
b. *Condensation vibrations*: caused by pressure pulsations.
c. *Final water hammer*: following the end of a blowdown into a suppression pool, condensation, aided by hydrodynamic instabilities may lead to very fast flow of liquid back into the vent line and reactor vessel (if a rupture disk is used).

These problems are discussed by Moody [19], and equations and graphs are presented for designing components to withstand these unsteady flow phenomena forces.

(*b*) *Safety considerations and features.* Even though the catch tank may be designed for 50 psig or greater, it is recommended that a rupture disk be provided, since quite often the runaway reaction may continue in the catch tank. Also, the rupture disk is required in the event of an external fire around the catch tank, or if the vapor discharge line goes to a scrubber or flare, and the catchtank could be blocked in. The rupture disk should be sized by the DIERS method [4]. The rupture disk discharge should be routed to the same destination as the catch tank vent. Naturally, if the rupture disk size is less than the vapor discharge line, then it is not needed.

If the liquid discharged into the catch tank contains appreciable water or an organic component with a freezing point near ambient temperature, antifreeze protection should be provided. If internal coils are used, consideration should be given to coil drainage. Also, the coils should have a generous corrosion allowance and adequate support to prevent mechanical failure. Heating jackets that use the vessel shell as one wall should be avoided because the vessel shell cannot be inspected for corrosion [1].

3. Reaction Forces on Relief Devices

The discharge of a safety valve or a rupture disk imposes a reactive load on the relief device system owing to the reaction force of the flowing fluid. The reaction force can cause the piping or vessel to recoil and the moment caused by the reaction force can result in excessive stress on the discharge piping, the inlet piping to the relief device, the equipment nozzle, and the equipment shell and supports. The relief device piping and the equipment nozzle must be subjected to a stress analysis to determine the required degree of bracing or support.

Since the moment on the piping equipment nozzle or equipment shell is the product of the reaction force and the lever arm, the inlet piping should be as short as possible to keep the lever arm at a minimum. Welded end valves should not normally be used on the inlet of the safety valve, since this will increase the length of the lever arm. Figure 8 shows typical safety valve installations. A comparison of details A and B shows how welded end valves increase the lever arm. Also, details C and D show that a 45° turn on the end of a long discharge line can greatly increase the lever arm.

The best installation is shown in detail E in which the reaction force acts back through the safety valve assembly, and the lever arm is very short.

The discharge reactive load also imposes a "recoil" force on the vessel itself, which has been known to shear the bolts that attach the reaction vessel to the framework of a building [20]. This recoil force should also be checked to determine whether the reactor structural steel supports or legs are strong enough.

WELDED END VALVES RESULT IN LONGER LEVER ARMS

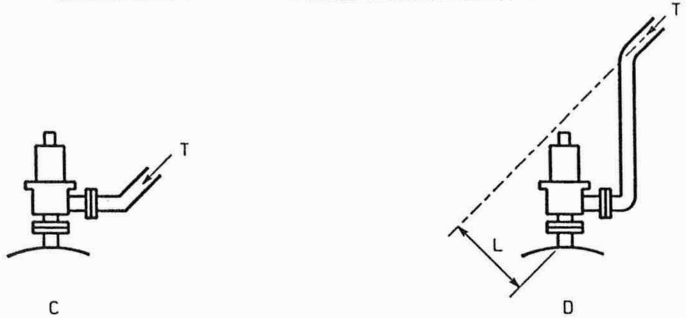

TURNS ON THE END OF LONG DISCHARGE LINES RESULT IN LONGER LEVER ARMS

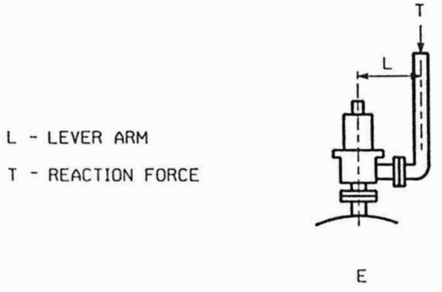

BEST INSTALLATION WHEN CONSIDERING REACTION FORCES ONLY - LEVER ARM VERY SHORT

Figure 8 Safety valve installations.

A thorough discussion of reaction forces (also called thrust forces) is presented in the *DIERS Project Manual* [4].

4. Thrust-Restraint Design

It is recognized that reaction must be restrained. Piping restraints are particularly important because piping and connections to vessels must withstand the thrust and bending moments generated when a relief device activates. A steady-state thrust acts at the pipe discharge to atmosphere; however, a transient thrust acts at each elbow parallel to the pipe entering and leaving each bend. Restraints should be designed for a total dynamic load of twice the steady-state load.

If bends are close together, the transient thrust tends to balance, reducing or eliminating the need for intermediate restraint. The reasoning here is that the duration of the force unbalance is short; therefore, system inertia tends to restrain the pipe during the transient condition. It is important to minimize the number of changes in direction when arranging a relief device system.

Allow for thermal expansion or contraction in locating restraints. Restraints for reaction forces sometimes have an adverse effect on piping that is subject to thermal change. Thermal flexibility must be maintained in the restraint design. Consequently, the thrust support bolts must sometimes be left loose on such systems so that the horizontal run can contract freely in a cold discharge. A formal computer stress analysis becomes more important with greater temperature changes and large lines.

If substantial cooling exists when the device activates, the vent pipe material should be chosen to be suitable for the minimum expected temperature. Chambard discusses this design problem in detail [16].

V. DISPOSAL OF GASES AND VAPORS FROM CONTAINMENT OR SEPARATION EQUIPMENT

A. Introduction

Unlike nontoxic gases and vapors that are discharged from safety valves or rupture disks and can be emitted directly into the atmosphere, highly toxic gases and vapors must be sent to disposal equipment that will render them harmless to humans or animals. The two most commonly used types of ultimate disposal equipment are scrubbers (absorbers) and flare systems. Activated carbon adsorbers and incinerators, which are widely used to dispose of highly toxic gases and vapors from normal process vents, are normally not used for emergency relief streams, as these types of equipment require fairly constant feed stream rates and compositions to achieve high efficiencies of removal or destruction.

In the following sections, we will discuss process parameters and design considerations and criteria for scrubbers and flare systems for final disposition of gases and vapors from containment or separation equipment.

B. Scrubbers (Absorbers)

1. Introduction

Highly toxic gases and vapors can be effectively rendered innocuous by feeding them into a reactive scrubber [21]. Types of scrubbers used in the chemical industry for general absorption operations are spray towers, packed and tray towers, and venturi scrubbers. However, for highly toxic gases and vapors, packed towers are the most commonly used, as many contact stages can be provided in this type of scrubber, which are quite often needed to provide a high degree of removal or neutralization. Venturi scrubbers can be used when one or two contact stages are adequate to achieve the desired degree of disposal.

Scrubbers for emergency releases of highly toxic gases and vapors must be designed to handle high gas rates and to accommodate hot gases, or those that generate heat when absorbed.

Another consideration is the selection of scrubbing solution. Both aqueous and organic solutions can be used as absorbents. The absorbent selected depends on the absorption characteristics of the toxic material being absorbed. For example, although water may be satisfactory for hydrogen chloride, an alkaline solution is required for substantial removal of chlorine from a gas stream. It might be possible to use organic liquids in some situations, as long as they are not flammable or toxic.

Compared with a flare system, which may handle waste gases from multiple sources, absorbers are often dedicated to specific units. Total plant capacity absorbers are not common because of the diverse nature of gas contaminants and the limited turndown ratio of absorbers. A typical turndown is about 10:1.

Scrubbers generate waste material in the form of blowdown liquids and solids. Even the regenerable systems require periodic replacement of the scrubbing solution as it degrades and loses activity. The wastes may be hazardous, depending on the contamination present in these streams, which is another disadvantage when absorber systems are compared with flares. However, for infrequent emergency use, these disadvantages may not be critical.

For highly toxic gases and vapors, a dedicated scrubber should be installed for emergency releases, rather than trying to design a scrubber for both normal process vents and emergency vents. For emergency scrubbers, very high efficiencies may be achievable that would not be economical for sustained, long-term operation of normal vent scrubbers. Many compounds, including H_2S, HCl, SO_3, Cl_2, SO_2, NH_3, and other inorganic and organic gases can be removed effectively by absorption. Properly designed scrubbers are capable of economically removing well over 90% of these compounds. Operating costs usually limit the efficiency that is economically feasible for long-term operation of normal vent scrubbers. For an emergency scrubber, for which intermittent use makes operating cost considerations less important, a very high efficiency may be feasible.

2. Mass Transfer with Reaction Considerations

In the analysis and design of "reactive scrubbers," consideration must be given to the independent effects of mass transfer and reaction. A vapor-phase component must first transfer into the liquid phase before it will react in the scrubbing liquid.

Although developed for conventional (nonreactive) absorption theory, the two-film (or two-resistance) theory is also commonly used in the analysis of these

Table 1 Characteristics of Various Gas–Liquid Intereaction Regimes

Regime	Characteristics
Kinetic regime (slowest reaction)	The reaction takes place solely in the bulk liquid. The bulk liquid concentration aproaches its concentration at the gas–liquid interface.
Diffusional regime (slow reaction)	The reaction takes place solely in the bulk liquid. The bulk liquid concentration approaches its chemical equilibrium value (which is often zero)
Fast regime (fast reaction)	The reaction takes place solely in the liquid film. All of the dissolved gas reactant is consumed before it reaches the bulk liquid.
Instantaneous regime (fastest reaction)	The reaction takes place at a plane in the film. The soluble vapor component and the liquid reactant cannot coexist. (The reaction of a strong acid with a strong base is an example of an instantaneous reaction).

gas–liquid reactions. This theory assumes the presence of gas and liquid films on either side of a gas–liquid interface. The gas-phase component passes from the bulk gas in succession through the gas film, the liquid film, and into the bulk liquid. Reaction can proceed in the bulk liquid, the liquid film, or in both locations. Phase equilibrium exists between the gas and liquid at the gas–liquid interface, but not between the bulk gas and the bulk liquid.

The analysis of gas–liquid reactions is partly governed by the relative importance of the liquid–film mass transfer rate versus the liquid–phase reaction rate. Depending on their relative importance, the reaction can be operating in any of the following four regimes: kinetic, diffusional, fast, or instantaneous, or combinations thereof (e.g., kinetic–diffusional). A knowledge of the appropriate operating regime is necessary in designing and evaluating scrubbers in which reactions are taking place.

The characteristics of each regime are as indicated in Table 1.

Table 2 summarizes the influence of various reaction parameters on the reaction rate (per unit volume of reactor) for these four operating regimes [22].

The appropriate regime can be estimated from the first-order reaction rate constant, as illustrated below:

Kinetic regime	Rate constant $< 0.01\ s^{-1}$
Diffusional regime	$0.01\ s^{-1} <$ rate constant $< 40\ s^{-1}$
Fast regime	$40 s^{-1} <$ rate constant $<$ very large number
Instantaneous regime	Rate constant is essentially infinite

Table 2 Influence of Various Reaction Parameters on Reaction Rate for the Four Operating Regimes

	Regime			
Effect of change in	Kinetic	Diffusional	Fast	Instantaneous
Reaction rate constant	Directly proportional	Independent	Proportional to its square root	Independent
Interfacial area	Independent	Directly proportional	Directly proportional	Directly proportional
Liquid–phase mass transfer coefficient	Independent	Directly proportional	Independent	Directly proportional
Partial pressure (i.e., solubility)	Directly proportional	Directly proportional	Directly proportional	Independent

These values are only approximate. A detailed analysis must be performed to identify the appropriate regime.

In a large number of cases, the gas film resistance can be neglected, which implies that the liquid at the gas–liquid interface is in phase equilibrium with the bulk gas. Its importance, however, should always be checked. If the gas is dilute and the reaction very fast or instantaneous, the gas film resistance will often be the controlling one.

Whether the reaction is liquid film- or gas film-controlled has an effect on the height of packing required for a specific recovery of a toxic component from a gas stream. Figures 9 and 10 show the relation between height of packing and fraction removal for liquid film-controlled and gas film-controlled reactive scrubbing, respectively [23]. Liquid film-controlled reactions are those that occur if there is essentially low solubility of the toxic gas in the liquid phase, such as the absorption of CO_2 or H_2S into caustic solutions. Conversely, gas film-controlled systems are typically exemplified by high solubility of the toxic gas in the liquid phase, such as absorbing HCl or chlorine into caustic solution. Such charts are useful in making preliminary estimates of packing heights needed for specific removal efficiencies, but they should not be used for final designs. Final designs should be made by the rigorous methods presented in texts on mass transfer, such as by Lydersen [24], Astarita [25], and Rousseau [26].

3. Scrubber System Design Considerations and Criteria

A typical toxic gas scrubber system consists of the following components: a scrubber (usually a packed column), scrubbing liquid recirculation pump, scrubbing liquid cooler, exhaust blower–fan (optional), and instrumentation. Since an emergency scrubbing system must be operational at all times (24 h/day) to handle

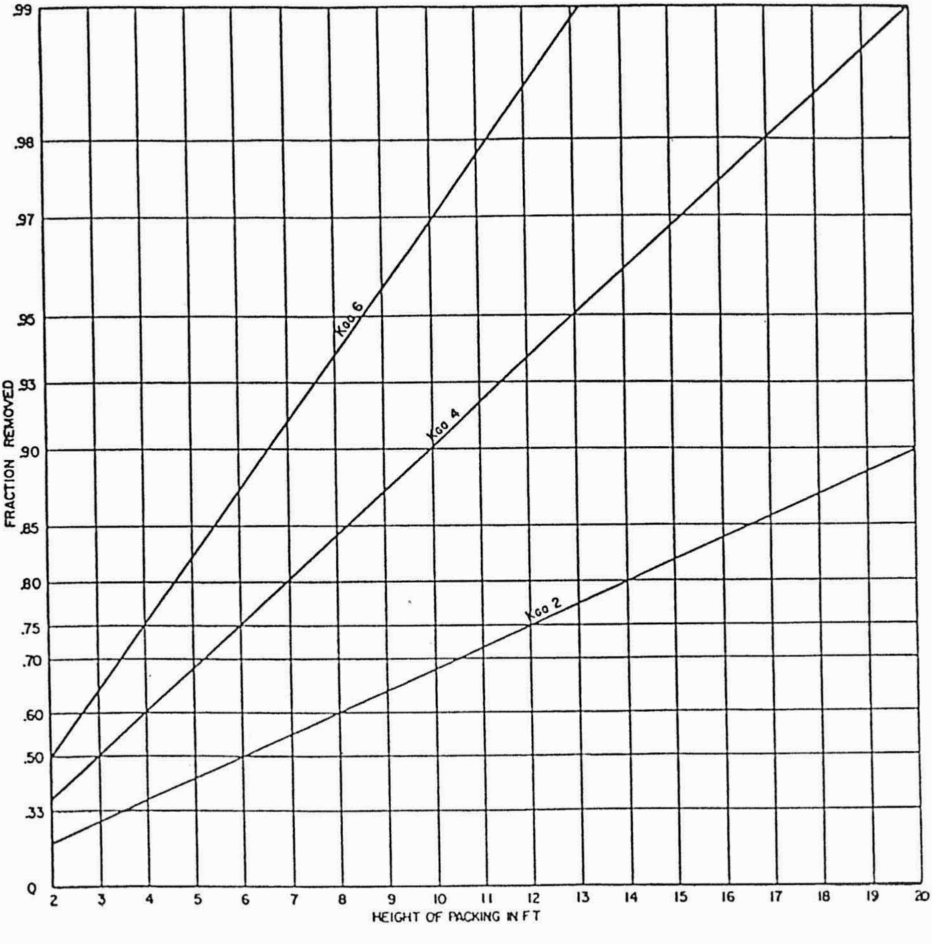

Figure 9 Absorption with reaction liquid film-controlled. 2 inch Intalox saddles (plastics); 2-ft/s air velocity, atmospheric pressure, ambient temperatures, liquid rate 2500–5000 lbs/ft^2/h, and recycle liquor 50–75% reacted.

releases from pressure relief devices (which could occur at any time), the following design features should be provided to ensure a reliable system:

a. Installed redundant (backup) spares for the recirculating pump and blower–fan (if used). The spare pump is to be turned on automatically by a low-flow switch in the pump discharge piping.
b. A means of ensuring that the pump and blower–fan will continue to operate even if the primary power supply is lost or momentarily interrupted. There

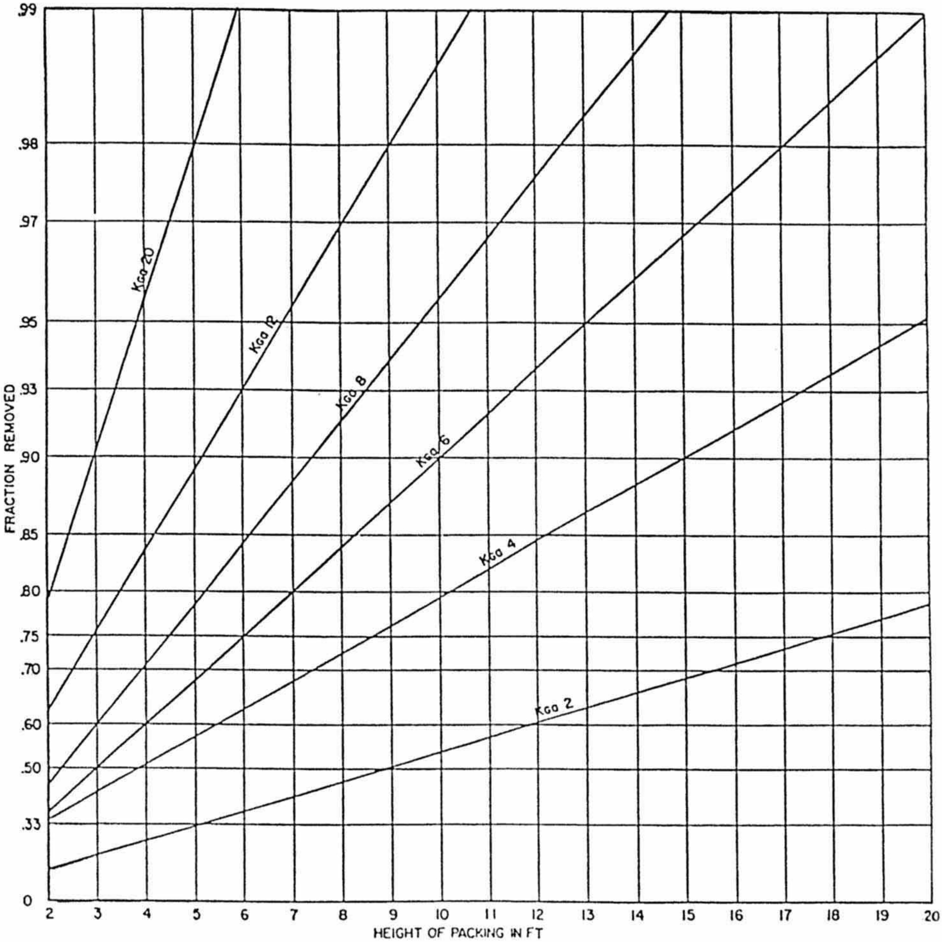

Figure 10 Absorption with reaction gas film-controlled. 2 inch Intalox saddles (plastics); 2-ft/s air velocity, atmospheric pressure, ambient temperatures, liquid rate 2500–5000 lbs/ft^2/h, and recycle liquor 50–75% reacted.

are several ways of doing this, such as driving the spare pump and blower–fan by a diesel engine, gasoline engine, or gas turbine, or providing an uninterruptible power supply (UPS).

c. A toxic gas detector and alarm in the scrubber outlet line.
d. A flow recorder and low-flow alarm in the recirculation line from the pumps to the scrubber. Some states (e.g., New Jersey) already require this.
e. A low-flow switch in the recirculation line from the pump to scrubber that is interlocked to start up the spare pump.

f. A scrubbing liquid cooler to control the inlet temperature of the liquid to the scrubber (removes heat of absorption and reaction). It may also be necessary sometimes to provide a heater to maintain a warm scrubbing liquid, particularly when the scrubber operates in a regime in which kinetics is important.
g. An exhaust blower or fan at the scrubber outlet. This is required to overcome the pressure drop across the scrubber and the line pressure drop in the feed line to the scrubber, and from the scrubber to a flare, if the toxic gas stream emanates from an atmospheric pressure vessel.
h. Redundancy for critical instruments and interlocks. Figure 11 shows a typical scrubber system for handling highly toxic gases, with the foregoing features indicated.

C. Flare Systems

1. Introduction

Flares are the most commonly used control devices that are installed to ensure that emergency releases of toxic (and flammable) gases are destroyed to comply with safety and environmental (EPA) regulations. However, when specifying and designing a flare system, consideration must be given to several safety problems inherent to flares, such as explosion potential, thermal radiation hazards from the flame, and toxic asphyxiation during a flame-out. Aside from safety, there are several other problems associated with flaring, which must be considered during the design and operation of such a system. These fall into the category of emissions from flames, and include smoke formation, flame luminosity, noise, and the possible emission of large quantities of unburnt gases, if improperly operated.

The most important (and most difficult) aspect of the flare design is setting the design basis. A good design basis will consider safety, environmental, and operating parameters, and must include the following:

a. Flare gas rate(s) to be handled by the system.
b. Composition(s) of flare gases to be handled.
c. Anticipated frequency of flaring.
d. Anticipated solar radiation and weather conditions—especially wind velocity and direction.
e. Limitations on possible flare stack location owing to adjoining property, hazardous material storage, or other (flame radiation effects).
f. Location of areas where people will normally or occasionally be working during times when an unexpected flaring of gas may occur (flame radiation effects).
g. Capacity for future expansion. A flare system is a utility and should be designed as such to allow installation of at least some anticipated future equipment without necessity for flare expansion.

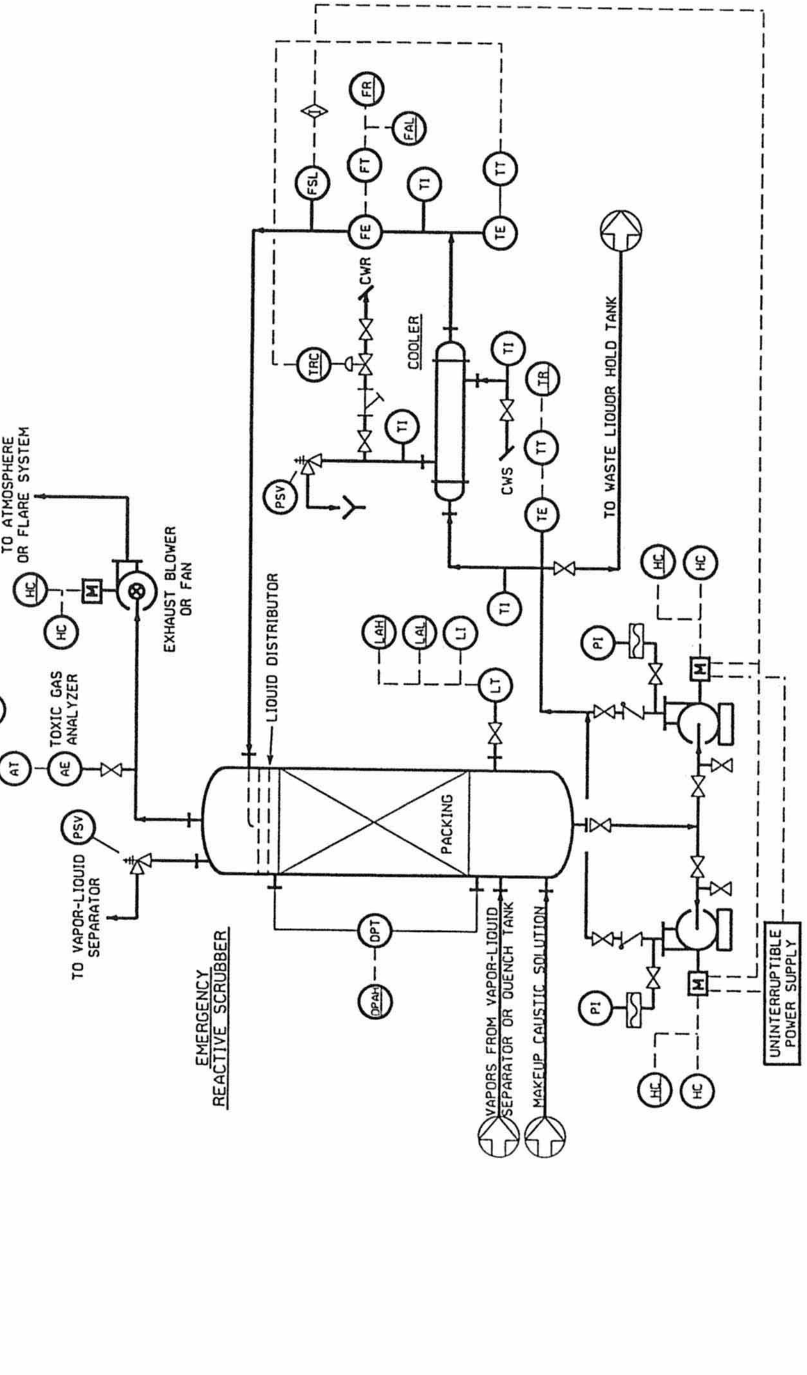

Figure 11 Schematic of emergency reactive scrubber.

2. Types of Flares

Flares are generally categorized in two ways:

a. By the height of the flare tip above grade (i.e., elevated or ground).
b. By the method of enhancing mixing at the flare tip (i.e., steam-assisted, air-assisted, pressure-assisted, or nonassisted).

Elevated flare stacks are the most commonly used types, and are found in petroleum refineries, petrochemical plants, and many chemical plants that have to dispose of flammable and toxic gases. Elevated flare construction can be any of the following types: self-supporting, derrick-supported, and guy-wire supported (Fig. 12). The advantages and disadvantages of these three types of construction are as follows [27]:

Self-supporting flares are generally used for lower flare tower heights (30–100 ft), but can be designed for up to 250 ft. Guyed towers are designed for over 300 ft, whereas derrick towers are designed for above 200 ft.

Free-standing flares provide ideal structural support. However, for very high units, the costs increase rapidly. In addition, the foundation required and nature of the soil must be considered.

Derrick-supported flares can be built as high as required, since the system is spread over the derrick structure. This design provides for differential expansion between the stack, piping, and derrick. Derrick-supported flares are the most expensive design for a given flare height.

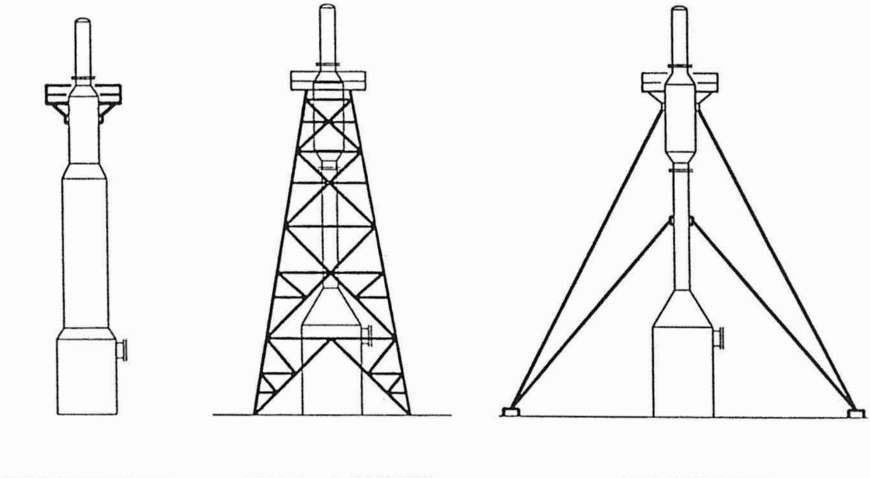

Figure 12 Types of support for elevated flare stacks.

The guy-supported flare is the simplest of all the support methods. However, a considerable amount of land is required since the guy wires are widely spread apart. A rule of thumb for space required to erect a guy-supported flare is a circle on the ground with a radius equal to the height of the flare stack.

In an elevated flare system, combustion reactions are carried out at the top of a high (as much as 600 ft) pipe or stack in which the burner and igniter are located. As compared with a ground flare, an elevated flare requires less ground area. Because of its high elevation, it can be located within a process area or on the periphery of the plant site, since radiation effects and ground-level concentrations of pollutants can be maintained within allowable limits. Piping costs tend to be lower owing to smaller and shorter pipe runs. Also, the distance between the point of discharge from relief devices and the flare stack is less than for ground flares.

A problem with elevated flares is that initial and operating costs are high. Maintenance is also difficult and tedious. The visibility of the flame is the most serious disadvantage and sometimes causes objections from the local community. These systems also require more steam to produce a smokeless flare. A final disadvantage is that noise levels are relatively high.

Elevated flares are usually designed to handle larger flows than ground flares, and are more likely to be used for high-volume upset or emergency flaring situations. In contrast, ground flares are more likely to be used for smaller-volume, routine process venting.

An elevated flare stack system includes the flare stack, supporting structure, seal drums, pilot burners, ignition system, gas (air) seal, and piping for air, steam, fuel gas to the pilot burners, purge gas, and control and monitoring instrumentation. Figure 13 is a sketch of a typical elevated flare stack system.

A ground flare is similarly equipped, except that the combustion takes place at or near ground level. Three types of ground flares are in general use:

a. The type that uses a water spray to disperse the combustion gases.
b. The venturi type that depends on the kinetic energy available in the waste gases to inspirate and mix the proper amount of air with the gases.
c. Multijet ground flares in which the flow of the waste gas is distributed through many small burners.

Figure 14 illustrates a ground flare system. The principal components included in this arrangement are a pilot burner, multijet burners, a refractory lined rectangular or cylindrical flare box, and a seal drum. The flare flame is confined to the inside of the flare chamber.

The principal advantages of a ground flare system are

a. No structural support is required.
b. Erection is relatively straightforward and requires light parts.

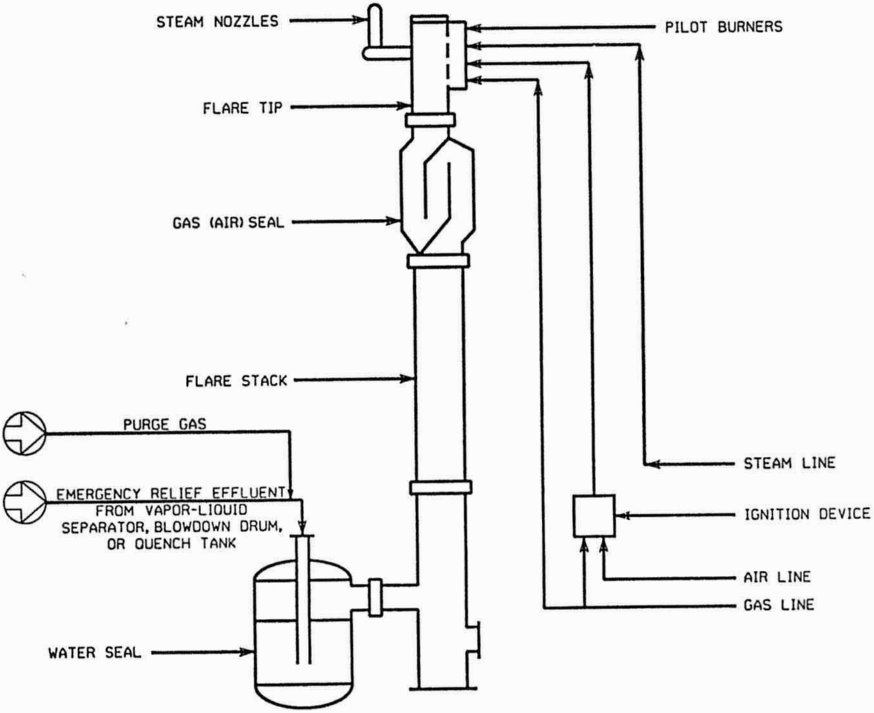

Figure 13 Typical elevated flare stack system.

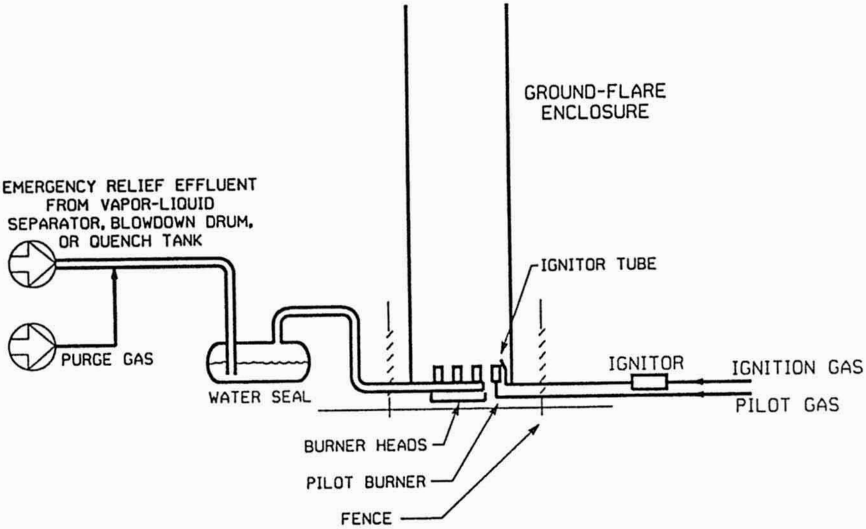

Figure 14 Typical enclosed ground-flare system.

c. Maintenance is easy.
d. Operating costs are negligible.
e. The flame of the flare is not visible, since it is hidden in a box. It requires less steam to provide a smokeless flare, since it produces relatively nonluminous flame because of more controlled combustion at the multiple burner.
f. Finally, with the exception of the venturi type, it is a fairly quiet system.

One disadvantage of ground flares is that they must be well isolated from the remainder of the plant and property lines, thus requiring considerable space and long interconnecting piping. Other disadvantages concern flares that use spray water. These are often avoided because of high water consumption, the possibility of extinguishing the pilot burners, and potential water damage to instrumentation. The venturi type is almost obsolete because of objectionably high noise levels. The multijet type normally used has high initial costs and is capacity-limited. The major disadvantage that dictates against their use for destroying toxic gases is that concentrations of toxic gases can be relatively high because of combustion taking place at ground level. They, therefore, should not be used to burn toxic gases.

3. Combustion Aspects of Flare Operation

From the combustion aspect, flares can be classified as nonsmokeless flares, smokeless flares, or endothermic flares. Each of these flare types is built in the following configurations: vertical or elevated flares, horizontal or pit flares, enclosed or ground flares, or offshore or boom flares.

(*a*) *Nonsmokeless flares.* Nonsmokeless flares are used for hydrocarbon or vapor streams that do not cause smoking, such as methane, hydrogen, carbon monoxide, coke oven gas, and ammonia. Ammonia is a special case—it will burn with low efficiency and could produce white plume if the atmospheric moisture content is high. Heavier hydrocarbons can be burned, but with considerable smoking in these flares. However, this could be tolerated if flaring occurs only during short emergency upsets.

(*b*) *Smokeless flares.* Smokeless flares are required for clean disposal of hydrocarbon streams in the paraffin group above methane and for all other groups, such as olefins and aromatics. These flares use steam, high-pressure fuel gas, water spray, an air blower, or high velocity vortex action to produce smokeless operation and improved combustion performance. All of the smokeless flares utilize outside momentum sources to produce gas–air mixing and turbulence. The steam, fuel gas, and vortex flares obtain momentum levels from the high velocities of the jet streams used to produce smokeless operation. The assist medium mass requirements are low because of this high velocity. Typical values for steam or fuel gas are from 0.15 to 0.50 lb of assist per pound hydrocarbon flow. However, the water spray and air blower produce their momentum levels quite differently. For these flares, high velocities are not employed, they use low velocities, with greater mass flow rates. For water spray flares, typical water rates are 1–5 lb water per pound hydrocarbon. These rates are highly dependent on method of water injection and degree of atomization of the water stream. Wind also has a very great effect on water spray flares, and it can greatly reduce their desirability and effectiveness. The air blower flare used approximately 3–7 lb of air per pound of hydrocarbon to produce smokeless operation. A strong artificial wind from the blower holds the flare flame erect against any natural wind forces, thus ensuring smokeless operation.

(*c*) *Fired or endothermic flares*. Fired or endothermic flares are a form of elevated incinerator for use on low-heat waste streams, such as tail gas. Whenever the heat content of the waste stream is below 150 BTU/ft^3, then a fired flare with a high-energy-assist gas should be considered to ensure complete combustion. However, there are some cases that require special attention.

Ammonia flaring is very special because of the presence of fuel-bound nitrogen, which has a quenching effect on the flare flame and can also generate NO_x. Ammonia has a heating value of 365 BTU/ft^3, but it requires assist gas to increase this heat content and ensure complete combustion while minimizing NO_x production. The assist gas is very important in reducing NO_x levels because it controls air introduction into the flare flame providing an initial fuel-rich premixing zone and a secondary combustion completion zone. Care should be taken in determining requirements of assist gas quantities for the proper flare operation. For some ammonia applications, when the flare is for emergency use only, a nonsmokeless or utility flare can be used. Approximately 92% of the ammonia will be burned in a low-temperature flame, which is nearly invisible and, because of the low oxidation temperature, NO_x formation is not favored.

Other special applications and regulations must be considered individually. An example is sulfur tail gas that requires a minimum heat content of 250 BTU/ft^3 to ensure complete combustion, high temperature, and good dispersion. Whenever secondary pollutants could be generated, dispersion calculations should be performed. The basic design of a fired or endothermic flare is dependent on the required amount and available pressure of the assist gas.

One method that is not recommended is the direct injection of assist gas into the base of the flare stack. This method uses the chemical energy of the assist gas, but its kinetic energy is lost. The air inspirating and turbulence-generating ability of the assist gas is wasted. Direct assist gas injection into the flare stack produces very poor results. The flare flame is very lazy and easily influenced by the wind, allowing the wind to break up the flame and reduce operating efficiency.

For proper design, the gases' kinetic energy should be used in addition to their chemical energy. Small flares or flares requiring only small amounts of assist gas use inspirating incinerator burners to oxidize the waste gases. When the flare capacities or assist gas rates increase, then flares with ring and center injection are used to supply the required assist gas flow to produce turbulent mixing.

4. Factors Affecting Flare Efficiency

The major factors affecting flare combustion efficiency are vent gas flammability, autoignition temperature, heating value (BTU/scf), density, and flame zone mixing.

The flammability limits of the flared gases influence ignition stability and flame extinction. The *flammability limits* are defined as the stoichiometric composition limits (maximum and minimum) of an oxygen–fuel mixture that will burn indefinitely at given conditions of temperature and pressure without further ignition. In other words, gases must be within their flammability limits to burn. When flammability limits are narrow, the interior of the flame may have insufficient air for the mixture to burn. Fuels, such as hydrogen, with wide limits of flammability are, therefore, easier to combust.

For most vent streams, the heating value also affects flame stability, emissions, and structure. A lower heating value produces a cooler flame that does not favor combustion kinetics and is also more easily extinguished. The lower flame temperature also reduces buoyant forces, which reduces mixing.

The density of the vent stream also affects the structure and stability of the flame through the effect on buoyancy and mixing. By design, the velocity in many flares is very low; therefore, most of the flame structure is developed through buoyant forces as a result of combustion. Accordingly, lighter gases tend to burn better. In addition to burner tip design, the density also directly affects the minimum purge gas required to prevent flashback, with lighter gases requiring more purge.

Poor mixing at the flare tip is the primary cause of flare smoking when burning a given material. Streams with a high carbon/hydrogen mole ratio (greater than 0.35) have a greater tendency to smoke and require better mixing for smokeless flaring. For this reason, one generic steam/vent gas ratio is not necessarily appropriate for all vent streams. The required steam rate is dependent on the carbon/hydrogen ratio of the gas being flared. A high ratio requires more steam to prevent a smoking flare.

5. Environmental Issues (Environmental Protection Agency Requirements)

The EPA requires the following limitations for operation of flare systems [28]:

a. Steam-assisted or air-assisted flares require the gas have a minimum net heating value of 300 BTU/scf.
b. Nonassisted flares require the gas to have minimum net heating value of 200 BTU/scf.

c. An exit velocity at the flare tip of less than 60 ft/s for 300 BTU/scf gas streams and less than 400 ft/s for > 1000 BTU/scf gas streams. For gas streams between 300 and 1000 BTU/scf, the maximum permitted velocity (V_{max}, in ft/s) is determined by the following equation:

$$\log_{10}(V_{max}) = \frac{B_v + 1214}{852}$$

where: B_v is the net heating value in British termal units per standard cubic foot (BTU/scf).

d. No visible emissions. A 5-min. exception period is allowed during any 2 consecutive hours.

e. A flame present at all times when emissions may be vented. The presence of a pilot flame shall be monitored using a thermocouple or equivalent device.

6. Flare System Components Design Criteria

(*a*) *Water seal drum.* Emergency vent streams are usually passed through a water seal before going to the flare stack. The water seal can be downstream from the knockout drum or incorporated into the same vessel. This prevents possible flame flashbacks, caused when air is inadvertently introduced into the flare system and the flame front pulls down into the stack. The water seal also serves to maintain a positive pressure on the upstream system and acts as a mechanical damper on any explosive shock wave in the flare stack.

The design of the system shall preclude the backing up of the seal liquid into the flare line to the stack. The seal level shall be maintained automatically by liquid makeup and proper drawoff provisions, or by reliable instrumentation, and shall be alarmed to indicate loss of seal liquid. The design shall also preclude the possibility of seal liquid carryover into the stack (i.e., split-exit flow). If the seal tank is located in a cold climate, the water should contain antifreeze solution.

A procedure for designing a seal drum is given in API RP521 [1]. Proprietary designs for seal drums are also available from most flare system vendors.

(*b*) *Flare height.* The height of a flare is determined from the ground level limitations of thermal radiation intensity, luminosity, noise, height of surrounding structures, and the dispersion of the exhaust gases. In addition, consideration must also be given for plume dispersion in the event of a possible emission ignition failure. Industrial flares are normally sized for a maximum heat intensity of 1500–2000 BTU/h ft^2 when flaring at their maximum design rates [1]. At this heat-intensity level, workers can remain in the area of the flare for a limited period only. If, however, operating personnel are required to remain in the unit area performing their duties, the recommended design flare radiation level, excluding solar radiation, is 500 BTU/h ft^2. The intensity of solar radiation is in the range of 250–300 BTU/h ft^2. Flare height may also be determined by the need to safely disperse the vent gas in event of flameout. The height, in these cases, would be based on dispersion modeling for the particular installation conditions.

The following equation by Hajek and Ludwig [29] may be used to determine the distance required between a location of atmospheric venting and a point of exposure at which thermal radiation must be limited:

$$D = \sqrt{\frac{\tau F Q}{4\pi K}}$$

where: D = minimum distance from the midpoint of the flame to the object being considered, in feet (m)
τ = fraction of heat intensity transmitted
F = fraction of heat radiated
Q = heat release (lower heating value) BTU/h; (kW)
K = allowable radiation (BTU/h ft^2; kW/m^2)

API RP521 [1] has a table (in Sec. 4.4.2.3.3) that lists recommended design flare radiation levels (excluding solar radiation), and also recommends values of τ and F to use.

(*c*) *Flare tip diameter*. The flare tip diameter is generally sized on a velocity basis, but the pressure drop must also be checked. Flare tip sizing for flares must comply with EPA air emission standards and is governed by rules defined in the Federal Register [28].

The following design procedure is presented by Stone et al. [27]. To size the flare tip, the maximum allowable velocity (as given in Sec. 5 on environmental issues) and the total volumetric flow rate, Q_{tot}, in ACFM (includes emergency vent stream and auxiliary fuel gas flow rates) is required. It is standard practice to size the flare tip so that the velocity is 80% of V_{max}. The equation is then as follows [27]:

$$D_{min}(\text{in.}) = 12\sqrt{\frac{\dfrac{4\,Q_{tot}}{\pi\,60(\text{s/min})}}{0.8\,V_{max}}}$$

$$= 1.95\sqrt{\frac{Q_{tot}}{V_{max}}}$$

The flare tip diameter, D, is the calculated diameter, $D = D_{min}$, rounded up to the next commercially available size. The minimum flare size is 1 in.; larger sizes are available in 2-in. increments from 2 to 24 in. and in 6-in. increments above 24 in. The maximum size commercially available is 90 in.

A pressure drop calculation should now be made to ensure that the vent stream has sufficient pressure to overcome the pressure drop occurring through the flare system at maximum flow conditions. The pressure drop calculation is site-specific, but must take into account losses through the collection header and piping, the knockout drum, the liquid seal, the flare stack, the gas seal, and finally the flare tip. If sufficient pressure is not available, the economics of either a larger flare system (pressure drop is inversely proportional to the pipe diameter) or a mover, such as a fan or compressor, must be considered.

(*d*) *Gas (air) seal.* Air may tend to flow back into a flare stack owing to wind or the thermal contraction of stack gases, and may create an explosion potential. To prevent this, a gas seal is typically installed in the flare stack. One type of gas seal (also referred to as a flare seal, stack seal, labyrinth seal, or gas barrier) is located below the flare tip to impede the flow of air back into the flare gas network. There are also "seals" that act as orifices in the top of the stack to reduce the purge gas volume for a given velocity and also to interfere with the passage of air down the stack from the upper rim. These are known by the names "internal gas seal, fluidic seal, and arrestor seal." These seals are usually proprietary in design, and their presence reduces the operating purge gas requirements.

(*e*) *Pilot burners.* EPA regulations require the presence of a continuous flame. Reliable ignition is obtained by continuous pilot burners, designed for stability and positioned around the outer perimeter of the flare tip. The pilot burners are ignited by an ignition source system, which can be designed for either manual or automatic actuation. Automatic systems are generally activated by a flame detection device using either a thermocouple or an infrared sensor.

(*f*) *Control instrumentation and systems.* Adequate instrumentation and alarms shall be provided to indicate the following conditions:

Loss of water seal drum level
Loss of water seal drum water flow
Loss of purge gas flow
Loss of pilot gas flow
Loss of signal from pilot flame sensing device
Loss of mixing-assisting medium (e.g., air, steam, or gas)

All of the material covered in this section on flare systems is discussed also in thorough and greater detail in API RP521 [1] and the article by Stone et al. [27]. The adequate design of a flare system for toxic gases requires close working and cooperation between the chemical manufacturer (user or operator) and the flare system vendor (designer), as an improperly designed and operated flare for toxic gases has greater potential for loss of life than does a flare system for normal flammable gases.

REFERENCES

1. American Petroleum Institute (API), API RP521, *Guide for Pressure-Relieving and Depressuring Systems*, 3rd ed., API, Washington, DC, 1990.
2. American Petroleum Institute (API), API RP520, *Sizing, Selection, and Installation of Pressure-Relieving Devices in Refineries*, Part I, *Sizing and Selection*, 5th ed.; Part II, *Installation*, 3rd ed., API, Washington, DC, part I, 1990; part II, 1988.
3. C. Parry, *Relief Systems Handbook*, VCH Publishers, Deerfield Beach, FL, 1991.
4. American Institute of Chemical Engineers (AIChE), *DIERS Project Manual–Emergency Relief System Design Using DIERS Technology*, AICHE, New York, 1992.
5. D. Speechly, R. E. Thorton, and W. A. Woods, Principles of total containment system design, Presented at a meeting of the IChemE North Western Branch, Paper No. 2, 1979.
6. S. H. Tan, Simplified flare system sizing, *Hydrocarbon Process.*, Oct:149 (1967).
7. E. I. du Pont de Nemours & Co., Inc., Private communication to the DIERS Project.
8. A. G. Keiter, Emergency pressure relief discharge control by passive quenching, *Proceedings of the International Symposium on Runaway Reactions*, AIChE Center for Chemical Process Safety, New York, 1989.
9. A. G. Keiter, Emergency pressure relief discharge control by passive quenching—update, *Plant Operations Prog.*, 2:187–200 (1992).
10. CCPS, Quench tank design, in *CCPS Guideline for Effective Handling of Emergency Relief Effluents*, Center for Chemical Process Safety, AIChE, New York, 1995, Chaps. 5 and 6.
11. H. Fauske, Disposal of two-phase emergency releases, Presented at the 4th Miami International Symposium on Multi-Phase Transport and Participate Phenomena, December 15–17, Miami Beach, FL, 1986.
12. A. D. Scheiman, How to size shower deck baffled towers quicker: Part 1—tower diameter," *Petrochem. Eng.*, 37(3):29–33 (1965).
13. A. D. Scheiman, How to size shower deck baffled towers quicker: Part 2—tower tangent length, *Petrochem. Eng.*, 37(4):75, 78–79 (1965).
14. J. R. Fair, Designing direct-contact coolers/condensers, *Chem. Eng.*, June 12: 91–100 (1972).
15. W. A. Woods, On the reflection of shock waves from deflector plates, *Proc. Inst. Mech. Eng. (Lond.)* 180 (Part 3J):245–259 (1965–66).
16. J. L. Chambard, Designing process pressure relieving systems for safe performance," *Third International Symposium on Loss Prevention and Safety Prevention in the Process Industries*, Basle, September, 1980.
17. J. A. Noronha, J. T. Merry, and W. C. Reid, Deflagration pressure containment for vessel safety design, *Plant Operations Prog.*, 1:1–6 (1982).

18. National Fire Prevention Association (NFPA), NFPA 69, *Explosion Prevention Systems*, NFPA, Quincy, MA, 1992.
19. F. J. Moody, *Introduction to Unsteady Thermofluid Mechanics*, John Wiley & Sons, New York, 1990.
20. V. C. Marshall, and M. C. Cockram, Safety in batch reactors, North Western Branch Papers No. 2, Institution of Chemical Engineers, London, 1979.
21. D. S. Davis, et al., *Accidental Releases of Air Toxics: Prevention, Control and Mitigation*, Noyes Data, Park Ridge, NJ, 1989.
22. L. L. Simpson, private communication to CCPS Subcommittee on Emergency Relief Effluent Handling.
23. Norton Company Chemical Process Products Division, private communication to S. S. Grossel.
24. A. L. Lydersen, *Mass Transfer in Engineering Practice*, John Wiley & Sons, New York, 1983.
25. G. Astarita, *Mass Transfer With Chemical Reaction*, Elsevier, New York, 1967.
26. R. W. Rousseau, ed., Absorption and stripping, *Handbook of Separation Process Technology*, John Wiley & Sons, New York, 1987, Chap. 6.
27. D. K. Stone, et al., Flares, part 1: Flaring technologies for controlling VOC—continuing waste streams, *J. Air Waste Manage. Assoc.* 42:333–340 (1992).
28. *Federal Register*, 40 CFR Section 60.18 (July 1, 1988).
29. J. D. Hajek, and E. E. Ludwig, How to design safe flare stacks; Part 1. *Petrochem. Eng.*, 32:C31–C38 (1960); Part 2, *Petrochem. Eng.*, 32:C44–C51 (1960).
30. L. L. Simpson, Estimate two-phase flow in safety devices, *Chem. Eng.*, Aug:98–102 (1991).

10

Mitigation of Spilled Volatile Hazardous Liquids

Ralph H. Hiltz
Consultant, Boca Raton, Florida

I. SCOPE

Mitigation, in the context of this chapter, will address procedures to control accidental releases of liquids and gases that are not part of process or storage systems. The emphasis will be essentially on emergency response techniques. Many of these will be short-term procedures of limited capability and should not be substituted for fixed procedures that are based on in-plant hazard assessments. In all instances, procedures will be restricted to land spills. Mitigation of spills that reach groundwater by percolation, sewers, or direct discharge will not be addressed.

In the early development of spill mitigation technology, many options were investigated. As the technology developed, two basic types of procedures evolved, those that could be implemented permanently within industrial plants, storage facilities, and the like, and those that were adaptable to first-response organizations.

Various other procedures were developed to the point of practical application, but, because of special requirements, have not seen wide use. These need to be included in this treatise, since the unique requirements may be available in some plants, or they may be the best available technology for certain spill situations.

The following sections will discuss all pertinent techniques. Special equipment, if required, will be noted and referenced, but will not be described. The degree of attention provided to each of the procedures will be a function of the broadness of their applicability and the effectiveness of their action.

Regardless of the nature of the hazard of individual liquids or gases, mitigation techniques can be separated into five basic categories as follows:

a. Containment by physical barriers
b. Immobilization of the spilled liquid
c. Control of the vapor hazard
d. In situ conversion to a different species
e. Emergency containment

Each category will have several subcategories. Often, techniques will overlap two or more basic categories.

Many procedures involve commercial materials considered as proprietary. All discussions in the chapter will be generic in nature and will avoid claims not substantiated by independent testing or out of compliance with accepted standards. Cautions will be expressed when questions exist concerning efficiencies, generalized claims, and the nature of spill residues.

II. CONTAINMENT BY PHYSICAL BARRIERS

Containment of spilled liquids, if possible, should be the first consideration in mitigation. When feasible, permanent diking, curbing, or channeling to remote containment should be in place where hazardous liquids or liquefied gases are present.

The reasons for containment are to restrict spread or to minimize the surface area of the spilled liquid, or both. Restricting spread is essential to prevent release to the groundwater, where recovery is almost impossible, or movement into inhabited areas, or into areas where interaction may occur with other chemicals.

Minimization of the spill surface area benefits control of the vapor hazard. Vapor release is a direct function of the liquid surface area, the smaller the area, the smaller the gas release per unit time. It also has implications when fire may occur. The smaller the surface area, the less intense the fire, and the more readily it can be extinguished.

Because of many factors, permanent barriers cannot always be accommodated. Temporary containment can cover full diking, diversion to another area away from potential trouble, or localized blockage of leaks from pipes, valves, or containment vessels. Ditching, to divert or block flow, is also a form of containment; however, discussion of this type of action will be covered in Sec. VI of this chapter.

Systems to provide emergency containment come from three categories: naturally occurring materials, manufactured or processed materials, and fabricated structures.

A. Naturally Occurring Materials

The naturally occurring category includes earth, clay, sand, sawdust, and other similar materials. They are commonly and readily available and, thus, can be employed immediately to contain or divert the spilled liquid. In essence, that may be their only attribute. They are not truly effective barriers, since they are permeable to almost all liquids and are easily undermined.

Heavy clay probably provides the best barrier material. Sawdust or other combustible materials are the least acceptable, since heat may be generated by sorption of some chemicals. Combustible materials should never be used as barrier materials with flammable liquid spills.

The erection of barriers with the natural materials is usually accomplished by physical means, earth movers to shovels. Attention must be given to the potential hazard of using equipment driven by internal combustion engines or non–explosion-proof electrical motors for erecting barriers in flammable or combustible spills. The protection of personnel must be a first consideration in any mitigation operation. Such protection should be based on the hazard of the spill, without consideration of wind direction or land contour. Gases may move counter to the expected direction. It is best to place the barrier ahead of the moving spill, and on a solid surface, such as asphalt or concrete. Undermining of the barrier will be faster if the barrier is on unpaved or vegetated surfaces, or if the barrier bridges liquid material.

With the naturally occurring materials and, as will be seen, almost all other procedures, it is important to use only that amount of material necessary to successfully accomplish the mitigating action. The containment materials will become contaminated with the spilled liquid and will have to be disposed of, consistent with specified procedures. Since disposal may be the most expensive part of the spill incident, minimization of material requiring special disposal should be a prime consideration.

B. Manufactured and Processed Materials

The manufactured and processed materials category covers two types of agents, both of which are basically sorbents: granules, such as activated carbon, diatomaceous earth, and processed fibers, which are adsorbents; and expanded polymers, such as polyolefins, polyurethanes, and some cellulosics, which are absorbents.

Sorbents, as a class, will be addressed in detail in the next section on immobilization. The information presented here will be specific to their use as barriers.

Commercially, these materials are packaged in permeable bags, tubes, pillows, and other forms, for ease of use. These can be arranged around the periphery of the spill to act as a barrier. If possible, always use a packaged form. Loose sorbents containing hazardous liquids have a handling problem during cleanup.

Sorbent materials have a finite limit on their containment capacity. Once that capacity is reached the barrier becomes ineffective and, similar to the natural materials, the containment fails. Excess sorbent should always be used to prevent any portion of the sorbent material from reaching saturation. Saturation of both adsorbents and absorbents creates significant problems. The full limits on sorbent use will be made clear in Sec. III.

C. Fabricated Structures

The problem of undermining the natural materials and the saturation of sorbents can be minimized by solid barriers, which by weight or adhesion form a continuous interface with the substrate. This assumes an impermeable substrate free of vegetation or other interferents to a continuous interface.

Several approaches have been tried to develop a solid barrier material, but none have been truly practical. Two materials, however, need to be identified, since they have seen some use. These are light-weight gelled concrete and closed-cell polyurethane foam. Both materials are items of commerce that have other uses in industries than for spill response. Because of the need for special equipment and some materials limitations, their potential in spill control has not been fully realized.

1. Cellular Concrete

Cellular concrete material is a light-weight cement, with effective densities as low as 25 lb/ft^3. Its application is in roof decking, for energy absorption, and for structural items where freeze-thaw effects are a problem. Several forms exist, but the one of interest for spill containment is made by blending a cement slurry (no aggregate) with a preformed low expansion foam. Commercial equipment is available that incorporates all of the required elements and discharges the expanded wet slurry through a hose and nozzle.

The foamed slurry is very viscous. By injecting a small amount of a silicate solution into the slurry at the point of discharge, a rapid gelation occurs. At wet slurry densities of less than 50 lb/ft^3, sufficient green strength is developed that free-standing shapes can be erected with angles of repose up to 45°.

Even though the cement does not achieve a real set for an hour or more, it has sufficient strength to hold back several inches of liquid in its initial gel state. The gelled concrete is resistant to most nonacidic hazardous liquids. Acids attack the cement, even acid-resistant cement. The rate of attack depends on acid concentration. Finite containment times are possible with weak acids or with dilute strong acids, but not with concentrated strong acids.

Because of the cellular form, the cement is easily broken up and removed when the spill incident has been resolved. Details on equipment and chemistries are available from U.S. Environmental Protection Agency (EPA) and Bureau of Mines reports [1–3].

2. Closed-Cell Polyurethane Foams

Low-density, 2–4 lb/ft^3, rigid polyurethane foams can be made by blending a polyol with an isocyanate in which a blowing agent is dissolved. This type of material has applications in sealing and insulation.

Foam-in-place portable units are available in sizes from backpack to large wheeled cylinders. These consist of two pressurized tanks, one of polyol and one of isocyanate. Delivered through a mixing nozzle, the two components react by catalysis to form a rigid urethane. The heat of reaction vaporizes the blowing agent within the mass to produce the cellular structure.

Because the urethane has not fully set at the time of discharge, it has adhesive qualities that bond it to a solid substrates and allow the formation of a barrier. With this light-weight material, it is the adhesive strength that holds the barrier in place. This strength is the main limiting factor in its use as a barrier to contain liquid spills. The foam will not adhere to wet surfaces, and it is necessary to apply it ahead of the spreading liquid.

The urethane is foaming as it is being delivered and becomes too viscous to penetrate into grass or other types of vegetation, making it unsuitable for that type of surface. Since the urethane expands during application, it can be used to block sewer grates or similar drain covers, even when liquid is flowing into the drain. The expansion gives side forces, which lock the foam into the grate openings. It is in this application that urethane has seen its greatest use in spill control.

The foamed urethane is compatible with most liquid materials. Polar compounds with a high dielectric constant are the notable exception. Inorganic acids and bases will attack the urethane–substrate interface and, eventually, undermine the barrier.

A second limitation on the use of foamed urethane has been the relatively short shelf-life of the prepackaged catalyzed units. Typically this is 18 months from the date of manufacture.

Detailed reports have been issued by the EPA on the development and use of this material in spill control [1,4]. Figure 1 shows the formation of a urethane dike, and Fig. 2 the sealing of a sewer grate, both using a backpack style unit.

3. Plugs and Patches

Repair devices constitute a form of barrier. Solid materials, such as wood, plastic, and even lead, have been used to seal broken pipes, failed valves, and similar leak sources. They can be roughly shaped to the leak opening and then driven in to form a plug.

Irregular openings, such as burst side walls or cracked pipes require some additional sophistication. Adhesive and clamp-on patches are commercially available in kits, but are most adaptable to failures releasing gases, not liquids. Flowing

Figure 1 Formation of a dike with a urethane foam unit.

liquid interferes with adhesion, and it is usually difficult to seal irregular shapes on a perimeter with metal clamp-on devices. The commercial devices all come with instructions and limits on their use.

Devices using closed cell polyurethane foam have been developed to form plugs in small irregular openings [5,6]. Once available commercially, the devices are no longer manufactured because of poor sales. They can be easily approximated, however, by using the polyurethane packs described earlier in this section, or with the small aerosol can urethane foam units available in retail stores.

A plastic or rubber bag is affixed to the discharge nozzle of the urethane unit. The bag is inserted partway into the opening to be sealed. Foam is then discharged into the bag, inflating it and sealing the leak.

For leaks in which the liquid flow is too high for insertion, this procedure can still be used, if the bag can be wrapped around the leaking item. By connecting the ends of the bag and inflating it with urethane, a doughnut shape is formed around the leak. Since the foam expands uniformly in all directions, a tight seal

Figure 2 Sealing a sewer grate with a urethane foam unit.

can usually be achieved, even in the presence of protrusions, uneven surfaces, and flowing liquid.

III. IMMOBILIZATION

Immobilization in mitigation refers to procedures that act directly on the liquid to remove fluidity. The three major categories are sorption, gelation, and freezing. The first two involve entrainment in another medium. The third involves a change in physical state.

A. Sorption

Sorption covers two processes: adsorption and absorption. *Adsorption* entails the coating of a liquid on a solid surface with no true expansion of the sorbing medium. In *absorption*, the liquid penetrates the medium, with an accompanying swelling. It is important to know that there are significant differences between adsorbents and absorbents. They affect the application, behavior in contact with the spilled material and, most importantly, in the recovery and disposal of the medium at the end of the spill incident.

1. Adsorbents

The adsorbent group includes activated charcoals, diatomaceous earth, polymeric granules and fibers, mineral wool, and treated naturally occurring materials, mostly of cellulosic derivation. All of these materials hold liquid by surface attractive forces. The coating is thin, but relatively strongly held.

Activated charcoal is the preponderant material in this category, since it has an enormous surface area for a small volume of material. It also tends to be hydrophobic—not wet by water. Other materials in this group are treated to provide hydrophobic or, conversely, oleophilic properties. The water attraction–repulsion characteristic is significant, even for land spills. Since rain could seriously impair adsorption, this property should be identified in advance.

Adsorbents have two other properties of significance. The process of adsorption can be accompanied by the generation of heat, and there is the potential for spontaneous combustion with flammable liquids. The potential is small, but it should be recognized.

The second item is more important. Since adsorbents have a high surface area, when saturated they may present a greater vapor hazard than from the pool of liquid alone. This is a simple function of surface area ratios, the larger the surface area the greater the rate of vapor release.

2. Absorbents

Sponges may most accurately represent absorption. Commercial absorbents are primarily expanded polymeric materials derived from polyethylene, polypropylene, polyurethane, and certain cross-linked polymers. Untreated cellulosics, such as sawdust, may also be considered to be in this category.

The absorbents have a large-volume capacity to hold liquid in bulk. The drawback is that it is usually poorly held and handling the used absorbent can be difficult. Liquid may drain by gravity, and losses will almost certainly occur if the medium is squeezed or otherwise stressed.

The poor hold is exploited on the basis that the absorbate can be physically removed from the medium to allow reuse. This may be an acceptable procedure for innocuous materials, such as crude oil, but it is not a recommended practice for hazardous chemicals. First, the physical removal will pose a hazard to those performing the task. Second, regulation may require scrupulous cleaning before storage or reuse. This may be more costly than disposal and replacement.

3. Sorbents: General

The use of either adsorbents or absorbents must first address the compatibility between the sorbate and the sorbent. Given the wide variety of commercial materials available, this is a significant problem.

A basic guide was begun in the early 1980s [7], but it has not been updated since 1987 [8,9]. The problem is further complicated by the lack of specificity in manufacturers' literature and by the significant differences that can exist with each given class of sorbent materials. Variations in the type of plasticizer or filler in polymeric materials can affect chemical compatibility properties of sorbents of the same basic chemistry. The same is true of the surface treatment chemistry of processed materials.

In advance planning, it is best to identify the sorbates that might be encountered and seek a sorbent compatible with the specific chemicals identified. If possible, compatibility should be based on a standardized test, such as ASTM F-716 for absorbents and ASTM F-726 for adsorbents. Beware of so-called universal tests. Although they purportedly address both absorbents and adsorbents, to date, they address absorbents only.

When selecting a standard test, be sure data cover both wet and dry states and that vertical support-type tests are used to measure liquid retention capabilities of absorbents. Retention times should also be a concern if long-term spill situations are envisioned. Leaching through coatings or the polymer walls is a slow process, but can affect long-term retention efficiency and safety of handling during disposal.

The final consideration in sorbent use is disposal. Usually, material sorbed on or in a secondary medium will need to be disposed according to the regulations for the most hazardous component. Superficial changes in material characteristics will not change the disposal requirements. For instance, flammable materials adsorbed on charcoal may exhibit a closed cup flash point above 140°F. This does not allow disposal as a nonflammable material.

Incineration is a preferred method of disposal, but silicates and other mineral-based sorbents are difficult, if not impossible, to handle in incinerators designed for hazardous material disposal. Nonincineration disposal may require secondary containment of the contaminated sorbent. The secondary containment must be compatible with the sorbate.

If possible, do not move the contaminated sorbent outside the delineated spill site until it has been encased in leak-proof secondary containment. This is particularly important when saturated sorbents are involved.

B. Gellation

A gel is a colloidal dispersion of a liquid in a solid that exhibits a quasi-stable semisolid form. To form a gel it is usually necessary to physically mix the solid into the liquid. Gellation occurs slowly after the mixture has come to rest. If the gel is disturbed by mechanical action after it has formed, it can collapse and separate into solid and liquid phases.

All of the foregoing factors make the application of gellation to the control of liquid spills difficult. The situation is further complicated because not all liquids are amenable to gelling and, for those that are, there is no universal gellant. Thus, different gellants are needed for different chemical categories.

Gellation can be effective for thin layers or the top surface of liquids. It will not immobilize the spill, but it may be beneficial in reducing the vapor-release rate. Other mechanisms are more effective for this, however.

An attempt was made to commercially market a gellant system for hazardous spill applications [10,11]. To provide a gellant with broad application, four different gels were blended, each one covering a different chemical category. A high basic cost, exacerbated by the fact that only 25% of the material added was effectively used, limited its acceptance.

There are materials being used in oil spill response that form a gel with that type of material. These are also high-cost materials. Current use is almost exclusively restricted to oil spills on water, where cost can be justified and water movement provides the necessary mixing action.

C. Freezing

Immobilization by freezing was an early consideration for the mitigation of spilled liquids [12]. The initial work investigated the application of liquefied gases, such as liquid nitrogen, liquid carbon dioxide and, for nonflammables, liquid air.

Although cooling and freezing could be achieved, large excesses of the refrigerants were necessary, owing to evaporative losses during application. In addition, almost continuous application was necessary to maintain the frozen state.

By switching to solid refrigerants, dry ice (CO_2) and wet ice (H_20), the problems of excesses and evaporative losses were minimized [13]. These materials, when applied in a crushed form, can develop a blanket over the liquid surface. This allows maintenance of the frozen state once it is achieved. The comparison of the behavior of the liquid and solid refrigerants on a simulated spill is shown in Fig. 3.

The drawback to freezing with solid refrigerants is the need for rapid availability of dry or wet ice in a crushed form. Many industrial plants have either or both of these materials on site on a daily basis in block or pellet form, with additional quantities available on short notice. This still leaves the need for a system to crush them to a suitable particle size.

In the EPA studies on freezing [13], a unit was developed that converted block ice or pellets to a crushed form, with an acceptable particle size distribution, and delivered it through a hose and nozzle for application to the liquid surface. This prototype accepts 50-lb blocks of ice at 1-min intervals. The yield of crushed dry ice is about 60% of the feed, not counting initial losses necessary to cool down the unit components to the dry ice temperature. Yields with wet ice will be higher. The unit operates continuously without clogging and can project ice particles for a maximum distance of 20 ft.

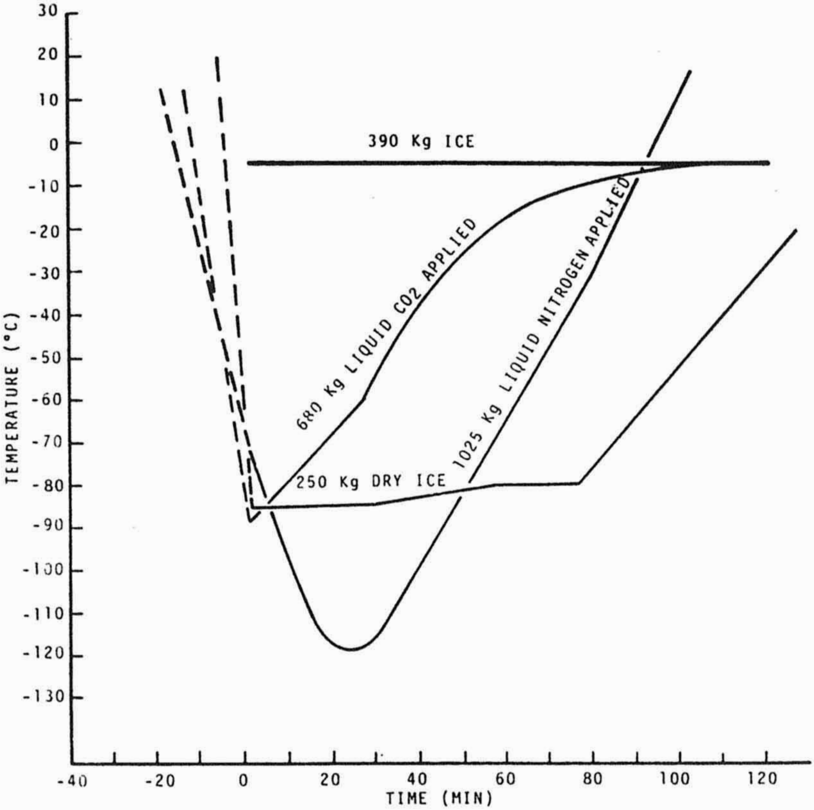

Figure 3 Comparative data on selected coolants using hexane as a test fluid.

Other devices have been evaluated to deliver ice particles to freeze liquid spills. Modified snow-blower designs had limitation on feed, both kind and rate, and throw distance. Snow horns, which are the conical discharge nozzles on liquid carbon dioxide fire extinguishers, have a theoretical yield of 20% solid and 80% gas. The liquid CO_2 extinguisher design was considered as a device to apply dry ice to small spills. Although considerable effort was expended, none could demonstrate better than 8% solid conversion, which is the rate for existing CO_2 extinguishers.

For freezing, dry ice is the best material. It is inert, has a lower effective temperature than wet ice, and sublimes, leaving no residue for disposal. Wet ice is more readily available, but it melts to a liquid, thereby increasing spill volume. It can also generate considerable heat with water soluble or reactive materials. Even with heat generation, wet ice is a way to dilute water-reactive materials with a minimum of heat generation. This attribute will be discussed in Sec. V.

IV. VAPOR HAZARD CONTROL

In spill mitigation, liquid movement can be contained after the release, but, once vapor escapes, it is usually not recoverable. Thus, control of the vapor hazard of volatile liquid spills lies basically with the prevention or minimization of vapor release.

Techniques to dilute, divert, or disperse gaseous releases after the fact have some degree of effectiveness.

Scrubbing, using water sprays or mists, is often employed, but the true effectiveness is debatable.

Spills of liquefied gases present a special situation. Since their boiling point is below normal ambient temperatures, vapor release cannot be stopped. Mitigation procedures for these materials employ buoyancy effects, if available, and chemical changes.

A. Blanketing

Blockage of vapor release from a liquid surface can be accomplished only by placing a cover over the surface of the liquid. In a dynamic spill situation, it is impossible to develop a barrier that is leak-tight.

The available blanketing techniques will be only partially effective in mitigating the vapor hazard. The degree of mitigation is governed by many factors, which will vary as a function of the chemical class and vapor pressure characteristics of the spilled liquid. These factors will have only minimal influence on the selection of mitigating procedures, however, since the state of the art is very limited.

Only three techniques have shown capability for controlling vapor release; floating hollow geometric shapes, floating oil layers, and water-based foam blankets. Of these, only foams are truly practical. In fact, foams are the most widely used mitigation technique in spill response. The National Fire Protection Association (NFPA) guidelines on response practices [14] include a listing of those techniques felt to be practical for first-responder teams. Of all the procedures listed, only foam is given a detailed dissertation on use.

1. Hollow Geometric Shapes

Floating hollow glass spheres were an early approach to vapor control. Significant studies were made of sphere diameters and size distribution as well as the material of construction: glass or plastic [12]. The results showed the need for sphere diameters less than 1/2 in. and a uniform size. Mixed sizes were beneficial if a uniform distribution could be developed, but, in practice, only random distributions occurred. The best results were achieved with dodecahedrons, rather than spheres. They produced the tightest packing density.

The application planned for hollow shapes was preplacement in impoundments surrounding storage vessels or adjacent to process areas. In a spill, the formation of a floating blanket would be instantaneous and continuous. After the spill the shapes would be recovered, cleaned and replaced. This was necessary, given the cost of the hollow shapes.

The use of the technique was short-lived. This was partly due to the evolution of other, less costly, procedures, but also, because of changes in environmental regulations that dictated scrupulous cleaning before reuse. As regulations continue to change, it is possible that blankets of floating shapes may be the best available technology for highly volatile toxic chemicals. Hollow spheres and other shapes are available commercially.

2. Oil Layers

Floating oil layers, like the spheres, were an early approach to vapor control. As with the spheres, they saw some use until recovery and disposal problems were identified.

Theoretically, floating oil layers form an effective barrier to vapor release from the surface of many chemicals on the hazardous lists. How many classes could be treated in this way is undetermined. The results of two specific applications deterred further use.

The early use of oil covers was directed to fuming acids. In the first application, certain silicone oils were found to be inert in contact with sulfur trioxide and oleum. Although some SO_3 vapor bubbled through the oil layer, there was an effective suppression of vapor release from both chemicals. When deployed in actual use, it was realized that the oil presented a major cleanup problem and could not be reused, a significant item given the cost of the oil. These difficulties, coupled with some successes in using water-based foams on oleum [15], ended the experiment with the silicone oils.

At the same time as the sulfur trioxide studies, the U. S. Air Force was testing high-purity mineral oil as a vapor control material for nitrogen tetroxide and red fuming nitric acid [16,17]. The tests were very positive and a full-scale mineral oil system was deployed for spill control at a Titan II silo and a fuel and oxidizer storage area.

The systems were the only ones installed and were decommissioned a short time later as a result of continued testing of the concept [18]. These tests showed that, although the oil was effective in suppressing the release of vapor, it did so in part by absorbing NO_2.

With long-term contact, the oil eventually becomes saturated with NO_2 and begins to release it to the atmosphere, compromising effectiveness. Once entrained, the NO_2 cannot be scrubbed from the oil. During the cleanup and disposal, the oil bleeds vapor continuously. Many removal techniques were tried without success. Blending with powdered limestone or similar material was the best approach, but, even in this case, seepage of NO_2 vapors lasted more than 2 weeks.

Oil layers can be effective, but they are costly both in use and in disposal.

3. Foams

Aqueous foams provide the best mechanism to mitigate the release of vapors from spills of volatile chemicals. *Foams*, by definition, are a dispersion of a gas in a liquid. The aqueous foams considered here are a dispersion of air in a dilute solution of a surface active agent (surfactant) in water.

Because air is the major component of foams, their density is much less than any liquid. Their nature is to float on the liquid surface. In this way, foam blankets can be formed that restrict vapor release from the liquid surface. It is this action that was the basis, some 50 years ago, of the development of foam systems to control and extinguish the fire of flammable liquid hydrocarbons. The standards [19] and the test programs [20] that have evolved for the so-called fire-fighting foams contain requirements for vapor control as well as fire suppression.

The efficiency of foam blankets on the flammable and combustible liquid hydrocarbons is very good, since the two are not miscible. Fire-fighting foams, however, react with and are ineffective against inorganic acids and alkalis, chemicals which hydrolyze to produce acidic or alkaline products, and some inorganic liquefied gases. The EPA has published two documents [21,22] that detail the capabilities of the fire-fighting foams.

The capabilities of aqueous foams to mitigate the vapor hazard of the hydrocarbon liquids prompted the development of foam systems more compatible with the water-reactive chemical classes. Two types of foam chemistries evolved: first, the simple modification of existing foam systems and, later, incorporation of a supplementary chemical system within the basic surfactant systems.

In the first category were changes to enhance the pH tolerance of the fire-fighting foam chemistries. The inability of the fire-fighting foams to resist the effects of acidic and alkaline materials has been shown to be due to a narrow pH tolerance, the pH that the bubble wall can experience before it ruptures catastrophically [23]. These foams were stable only between a pH of 5 and 8.

Improvements were made in two ways. By incorporating water-soluble polymers in the surfactant system, the pH range could be extended out to 2–10. The polymer addition did not compromise the fire-fighting capability and contributed to slower drainage, the rate water is lost from the foam. Slower drainage contributes to improved stability in all situations.

A second approach added components that would buffer the acidic or basic reaction. This created two foam systems, one for acids and one for bases, both of which were unacceptable for fire fighting.

The newest spill control foams contain a polymer system that reacts in the presence of acids and bases to form an insoluble polymer layer between the liquid and the foam. This layer isolates the foam from the spilled liquid and can become the prime barrier to vapor release.

The precedent for this type of foam came from the technique used to modify the fire-fighting foams so they could be used against the flammable polar compounds that are miscible with water. To counteract the destructive action of the polar materials on the aqueous foams, metal stearates were added to the foam agents. These precipitated from the foam to form an insoluble layer over the polar liquid surface. The stearates were difficult to use, and the current polar-compatible foams use a polysaccharide additive to form the floating insoluble layer.

The polymer layer-forming foams for use on the water-reactive materials use acrylic-based polymers. The original materials were two-component systems developed for the U. S. Air Force for specific use in spills of the hypergolic propellants hydrazine and nitrogen tetroxide [17]. Although very effective, the two-component system was difficult to use in other than fixed foam installations. A single-component system was eventually developed and is available. It is less efficient than the two-component chemistry, but is superior to other agents for which water reactions can occur [24].

(*a*) *Foam characteristics.*

Expansion. In the generation of foam the water/air ratio can be widely varied. This ratio is called the expansion. For fire and spill control, the useful expansion range is 3–800. The effective range for each class of hazardous materials will be limited, however. The available commercial foam-generating equipment is also limited to specific narrower ranges within the basic range.

Three expansions ranges are specified in current foam standards: low expansion, 2–50; medium expansion, 50–200, and high expansion, higher than 200. In practice, the available commercial generating equipment restricts the ranges to 4–12, 50–100, and 300–800.

Data to be presented for individual classes of hazardous chemicals will provide details on the best expansion for each class. As a general rule, however, the expansion chosen should be the highest that is consistent with the conditions of the spill incident. Several reasons can be cited for this rule, but the overriding factor is the minimization of liquid addition to the spill. The volume increase may spread the spilled material and could cause overflow of the containment, but, more importantly, it will increase the volume of material to be disposed of at the end of the incident. In most spill situations disposal will be a major, and probably the most, significant cost.

Spread and containment. Foam is fluid and will spread rapidly over liquid surfaces. There is some stiffness to the foam, and there is a minimum depth of foam required to maintain spread. Thus, if foam generation stops, foam spread will stop. This minimum thickness tends to increase with increasing expansion.

Foam spread on dry surfaces will be much slower than on the liquid surface. Rather than sliding, it actually rolls over itself because of the drag forces between the foam and the dry surface. Where close approach to the spill is not possible, it will be best to use a plastic tube or other device to duct the foam directly to the spill area.

It is beneficial to develop the foam blanket over the total spill surface as rapidly as possible. When water-reactive chemicals are involved, the vapor hazard will be exaggerated by the application of foam, and this effect will persist until the spill surface is completely blanketed. Since the spread, and thus, the cover rate, will slow down with distance from the point of foam discharge, large spill areas may require multiple points of discharge to achieve rapid coverage.

As yet, there are no general rules or guidelines for rates of application or cover. Fixed foam installations made specifically for vapor control have primarily used a 2-min cover time.

Restricting foam to the immediate spill area may require some form of containment. Natural barriers, such as ground depressions or heavy vegetation will tend to hold foams in place. Solid barriers are necessary only for low-expansion foams. Screening, small-mesh fencing, or other low-porosity structures will restrict movement of medium- and high-expansion foams.

Some foam containment will be necessary when wind velocities are in excess of 10 knots. The foam will not actually be blown away, but will be pushed downwind, exposing the upwind edge of the spilled liquid. Wind effects may be more severe where high dikes are in place owing to swirling. Permanent foam systems often use solid dikes of sufficient height to contain spilled liquid, with mesh fencing to contain the foam blanket.

Drainage and collapse. Once generated, foams immediately begin to lose water by gravity flow. The slower the drainage, the longer the foam is effective, the better the spread characteristics, and the less the effect of the wind. The benefits of slow drainage have been well documented in EPA reports [21]. If choices exist, the slowest-draining foam should be selected.

Foam collapse is a less important property than drainage. It begins after most of the water has drained away. Before substantial collapse begins, vapor permeation through the foam will be well developed. Actual mechanisms of foam failure, in terms of vapor control, will be covered in the separate sections addressing individual classes of chemicals.

Foam types. Water-based foams are formulated using two types of surface-active agents: protein-derived or hydrocarbon-based. Proteinaceous foams were developed for fighting fire of flammable–combustible hydrocarbon liquids. They are basically limited to that service and to the low-expansion mode. Hydrocarbon surfactant foams were primarily designed to fight fires in three dimensions, using the high-expansion mode.

Both of these materials have application in vapor hazard control. They also serve as the basis for evolution of more-specialized foam agents. The hydrocarbon surfactant system is the basis for most of the newer foam systems, including the polymer-modified, spill-control foams and the acid–base-specific agents. They are also the basis for foams called aqueous film-forming foams (AFFF). These are fire-fighting agents containing a small amount of a fluorocarbon surfactant to lower the surface tension of water below that possible with the hydrocarbon surfactants alone. Because of a very rapid collapse, AFFFs are not considered suitable for spill control specifically. Theoretically, they form a very thin floating layer of solution that has excellent vapor-sealing action. The layer is not readily visible and dependence on it being in place cannot be ascertained. The AFFFs are the basis for the previously noted polysaccharide-modified foams for use with polar compounds.

Fluorocarbon modifications of protein agents are also items of commerce, termed fluoroprotein or film-forming fluoroprotein (FFFP). These modifications are important in fire fighting, but improvements in vapor mitigation over standard protein agents are small.

One special foam system is being used in sealing the ground to prevent vapor percolation from soils contaminated with volatile liquids. An AFFF is modified at the point of generation to ultimately yield a urethane-like solid foam [25]. Its action is to seal against release of materials that have already been converted to the vapor phase in the soil. The aqueous foams act to prevent the formation of vapor at the liquid surface.

(*b*) *Application by chemical classes.*

Liquid hydrocarbons. Because they are immiscible with water, the vapor hazard of spilled, flammable, liquid hydrocarbons is very effectively controlled by a foam blanket. All of the so-called fire-fighting foams are effective for this. The protein-based foams may be best in this application, since their collapse rate is slower than the AFFFs or the surfactant agents.

Proteinaceous foams can be generated only in low expansion. If the volume of the liquid added to the spill is important, the hydrocarbon surfactant agents may be better, since they can be generated in all expansion ranges

No matter which foam type is used, it is important to maintain a complete foam cover over the total spill. Less than 10% voids in the cover can give up to 90% of the vapor release of the uncovered spill. It is this possibility that legislates against depending on the film formation of AFFFs being adequate for vapor control.

The fact that the flammable hydrocarbons are immiscible with water does not mean total water insolubility. Vapors will migrate into the foam bubbles and move slowly through the blanket. This action causes two conditions.

First, flammable vapors will eventually be released from the foam. It is necessary during the spill incident to monitor the downwind side of the spill. When vapor concentrations reach an unacceptable level, such as 20% of the lower explosive limit (LEL), the foam blanket should be replenished.

When new foam is added, it will displace the old foam. The old foam has lost much of its water and is lighter. The nature of the old foam creates the second condition. Because the bubbles contain flammable vapor, they may be ignitable.

Even though the vapor concentration in the bubbles is in the explosive range, such foams will only deflagrate and not truly detonate. Work by the U. S. Army Limited War Laboratory (unpublished) and the Corps of Engineers [26] has investigated the characteristics of foams blown with a variety of flammable mixtures, including oxygen–acetylene, with negative results on explosive detonations.

Basic guidelines for the use of foams with the flammable hydrocarbon liquids has been set forth by American Society for Testing and Materials (ASTM) [27].

Polar compounds. The polar materials are primarily water-soluble flammable organic liquids. Their miscibility with water make the normal fire-fighting foams ineffective. The polysaccharide-modified AFFF foams are the best agents for these materials.

In general, the use of foam with the polar compounds is the same as with the hydrocarbon liquids. Low expansion is necessary initially. Once the gel layer is fully established, it becomes the first line for vapor control. It is still desirable to maintain a visible blanket of foam over the spill surface, but foam replenishment can use a higher expansion. The polar-compatible foams can be generated at expansion up to 50.

The polarity of the polar compounds can be measured in several ways. One property is the dielectric constant. Polar materials will have dielectric constants from a low of 3 to higher than 20. Those compounds with values in excess of 14 will require a polar-compatible foam. For values less than 14, standard fire-fighting foams can be used with some effectiveness if polar foams are not available.

One material that does not require a polar-compatible foam is gasohol, at least at the current level of 10% alcohol. If that level should increase to 20% or more, the polar-compatible foam would be needed.

Liquefied hydrocarbon gases. The hydrocarbon gases, methane, ethane, propane, and the like, are routinely liquefied for transport and storage. For most of these, liquefaction is by pressure, but the use of refrigeration is becoming popular and is the method of choice for methane (liquefied natural gas; LNG).

Very small releases of a liquefied gas are rapidly flashed to vapor, but measurable spills can result in liquid pools. The spilling liquid first cools the ground to the boiling point of the liquid. At that point, liquid begins to collect. Through autorefrigeration the spill cools to temperature less than the boiling point of the liquid.

The vapor released by the liquefied gas is very cold and heavier than air. The vapors tend to move downwind close to ground level. Some of the gases, such as methane, ethane, and ethylene, have vapor densities less than air at normal ambient temperatures. When these gases warm to the point of buoyancy, they rise and disperse into the atmosphere.

Even with the cold temperatures, foam blankets can be developed on top of the liquefied gas spill. High-expansion foam, between 500 and 750 expansion, is the optimum material.

The foam blanket acts as a heat source, warming the escaping vapor and enhancing dispersion through buoyancy. This effect can be seen in Figs. 4 and 5. In Fig. 4, the cold gas escaping the spill condenses the moisture in the air to form a visible cloud. In Fig. 5, a foam blanket has been applied, and the escaping vapor is too warm to condense the moisture.

Enhancing buoyancy does not mean the elimination of a flammable gas cloud, only that gas concentrations downwind are lower at any point with the foam in place than for the free spill. Figure 6 plots downwind gas concentrations for an LNG spill, with and without a foam blanket in place.

Definitive data for foam application to spills of buoyant gases can be obtained from reports of the American Gas Association (AGA) [28] and the EPA [21]. The EPA work also reports on nonbuoyant gases, such as propane and butadiene. For these materials, foam is not appropriate. Buoyancy cannot be achieved at any temperature. The addition of foam accelerates the gas release, and the vapor hazard is exaggerated.

For fire, however, foam blankets can be beneficial with all of the flammable liquefied gases. The referenced AGA and EPA reports show that high-expansion foam blankets can reduce fire intensities to 10% or less of the free-burning state. The National Fire Protection Association has included guidelines and recommendations for the control of LNG fires by foam in its standard on high-expansion

Figure 4 Condensed moisture vapor cloud above an LNG spill.

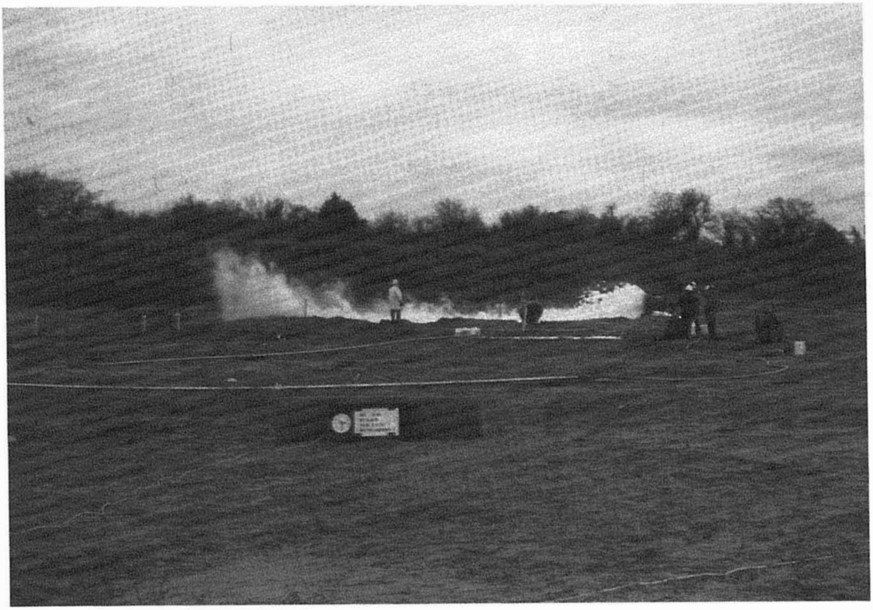

Figure 5 Foam-covered LNG spill.

foam [29]. The EPA work shows that these procedures can be used for all of the other flammable liquefied gases [21].

On the basis of the referenced works, recommendations have been made that spills of the liquefied gases should be covered with foam and burned off under the controlled conditions. This mitigation technique eliminates the flammable gas clouds, but is usable only where there are no adjacent areas subject to adverse thermal effects.

Unlike the flammable hydrocarbon liquids, foams applied to the liquefied hydrocarbon gases do not develop flammable gas concentrations within the bubbles. The vapors are released as discrete bubbles. These form at the foam–liquid interface, grow in size, and then rise through the foam. Initially, the foam flows in behind the rising bubble to reseal the blanket. As the foam drains and dries out, it loses fluidity and chimneys form. These provide a direct opening from the liquid surface to the atmosphere. When this formation begins, the foam should be replenished. Chimney formation will be evident by the appearance of localized areas of condensed moisture above the blanket.

With time, a porous ice layer will form on the surface of the liquefied gas. This will restrict gas release and increase the time increment between foam make-ups, but it will not be an effective vapor barrier.

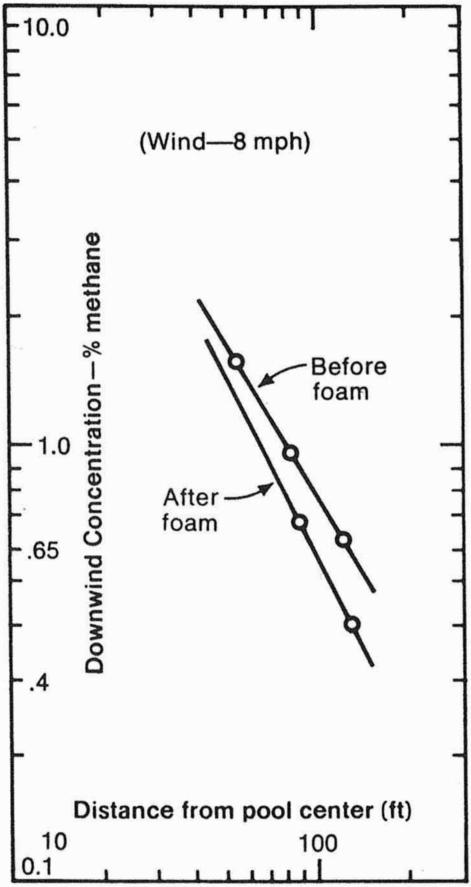

Figure 6 Comparison of downwind vapor concentrations before and after foam application to an LNG spill.

Water-reactive liquids. The standard fire-fighting foams are not effective against the water-reactive liquids. These are basically inorganic acids and alkalis, and the standard foams cannot stand the drastic pH changes these materials cause.

The early use of foams to mitigate the hazard from water-reactive liquids was directed to dilution, rather than true vapor control [15). Water additions to materials with high heats of solution or reaction cause violent reactions. Foam provides a mechanism to add water slowly to effect dilution with a minimum of reaction.

Changes in the pH tolerance of surfactant foam systems by means of water-soluble polymer additions to the foam agent [30] presaged the evolution of foams with ability to mitigate the vapor hazard of the water-reactive materials. The initial development yielded a foam that had enhanced capability for vapor mitigation, but without major compromises in fire-fighting capability [31].

New foams followed that had specific application to either acids or alkalis [32,33]. These materials had no application in fire control, however.

All of the new agents have limits on the degree and time of effective vapor control. These limits are not always documented. Much of the test data reported in the literature cover test times of 30 min or less.

The work conducted by the Air Force [17] on the hypergolic propellants, showed that the agents existing at that time had serious limitations when long-term vapor control was necessary. The work showed that, with repetitive foam additions, initial control can be lost, with subsequent deterioration to conditions worse than for the uncontrolled spill. When reactions can occur with the foam, short-term tests are no measure of long-term capability.

The limitations identified in the propellant work led to the development of the two-component foam system containing the acrylic polymer additives [18]. This type of foam is very effective. Vapor release rates as low as 5–100 ppm have been demonstrated, with control times, using repeated makeup, as long as 4 h. Figures 7 and 8 are taken from the Air Force work on nitrogen tetroxide. The

Figure 7 Simulated spill of nitrogen tetroxide.

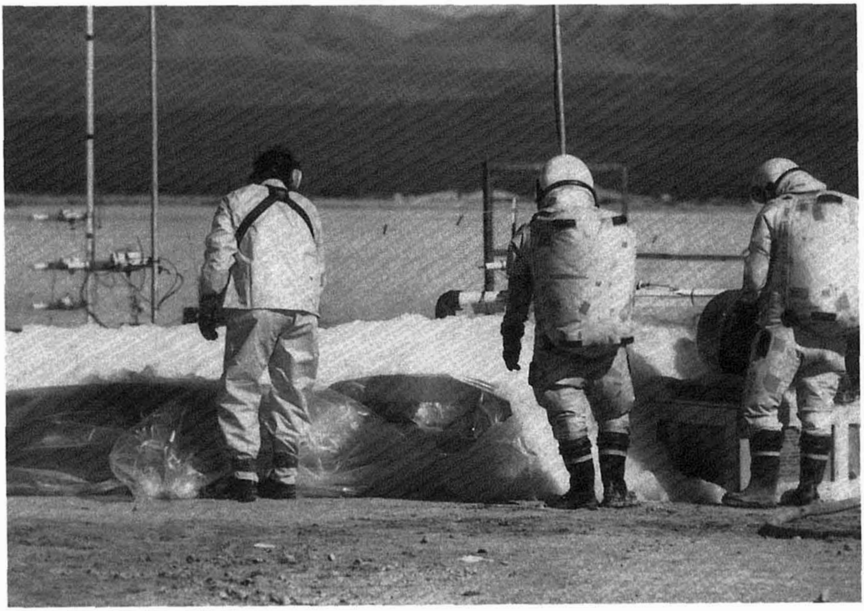

Figure 8 Nitrogen tetroxide spill covered with foam.

before and after effects of foam application are significant, since NO_2 is visible at 50 ppm.

The two-component system is awkward to use, except in fixed foam installations. A single-component system of similar chemistry was ultimately developed [24]. This agent also develops an insoluble polymer layer, but it is not as efficient in vapor control. With the materials so far tested, the vapor permeation rates are an order of magnitude greater than with the two-component foam.

There is one category of water-reactive chemicals that requires special consideration. These are chemicals that release a water-insoluble gas as one product of hydrolysis. Three types exist, of which the following are examples.

a. $Cl_2CO + H_2O \rightarrow 2HCl + CO_2\uparrow$
b. $Cl_2SO + H_2O \rightarrow 2HCl + SO_2\uparrow$
c. $Cl_3SiH + H_2O \rightarrow 3HCl + SiO_2 + H_2\uparrow$

The release of the insoluble gas compromises, but does not negate, the effectiveness of the foam blanket. In each case, the insoluble gas bubbles through the foam, carrying vapors of both the spilled liquid and the reaction products into the atmosphere. If the gases are basically inert, carbon dioxide and hydrogen, there is little that can be done. If the gas may be reactive with other chemicals, such as is sulfur dioxide, modifications in foam chemistry can enhance the absorption of the gas. This now poses some practical problems, but work is ongoing in the use of reactive additives to foam systems to enhance vapor capture [34].

The release of a flammable gas presents the same hazard as does a flammable, liquefied gas. Accumulation of the gas in the spill area will pose a danger to response personnel. In this type of situation, consideration should be given to the intentional ignition of the off gas, using a foam-controlled burn. The exaggerated release of an acid gas may be less of a hazard than is the release of the flammable gas.

Certain recommendations have been made concerning the use of polar-compatible foams with the water-reactive liquids. This application has not been fully evaluated. There is a concern with strongly acidic materials. The polymeric polysaccharides contain multiple OH– sites that are very reactive with acids. Until such reactions are well defined, the use of polar-compatible foams on acidic materials should be avoided.

Inorganic liquefied gases. There are several materials that fall into this category, but only three have seen any testing: chlorine, ammonia, and vinyl chloride monomer. Of these, chlorine is the simplest [35–37]. Chlorine does not have a significant water solubility, and its vapor has a very high density compared with other gases. Almost any foam, exclusive of AFFF, can exercise control over vapor release. High-expansion types may be the best, since chlorine vapor density, under normal ambient conditions, is essentially equivalent to a 500 expansion foam. For that reason, it cannot displace the foam and is trapped between the foam and the liquid surface.

Foam applied to a chlorine spill acts in three ways. It collapses and freezes as ice, the foam itself freezes in place, and the water can react with the chlorine to form chlorine hydrate, $Cl_2 \cdot 8H_2O$. All of these are solids and form a floating layer to restrict vapor generation.

Ammonia is the antithesis of chlorine. It is miscible with water in all proportions, has an extremely high heat of solution, and its vapor is buoyant at ambient temperatures.

High-expansion foam applications can reduce the vapor hazard, but low- and medium-expansion foams cause a reaction of sufficient magnitude that the vapor hazard can increase. This is principally a water content effect.

Much of the understanding of the behavior of ammonia in contact with foam depends on the realization of the buoyancy effects. Ammonia vapor is buoyant relative to air; however the vapor released by the ammonia spill is not NH_3, but NH_4OH ($NH_3/(H_20)$. This material is buoyant only at elevated temperatures. Because of the high heat of solution, the vapors released from an ammonia spill, when in contact with water, are hot and, thus, buoyant. This is the basic explanation for the reduced vapor concentrations that are experienced in tests involving foam application to liquid ammonia spills [34,36].

Caution must be taken with ammonia spills treated with foam. As the hot vapors rise, they will cool and lose buoyancy. As a consequence, the vapor cloud can and will collapse. In so doing, it radiates the toxic vapor in all directions, regardless of wind direction. The potential that the vapor can spread upwind from the spill source must be considered in the spill mitigation plan.

Vinyl chloride monomer (VCM) spills can be influenced by a foam blanket. Tests by MSA [38] show that the vapor release rate can be reduced by using a medium-expansion foam. This still allows the release of a purported carcinogen. Like other liquefied flammable gases, VCM can be burned off under foam-controlled conditions. Depending on the spill situation, the release of HCl by the fire may be less problematic than the release of the pure vapor.

B. Vapor Scrubbing

Many systems are available for vapor scrubbing. This section will address two mechanisms, water sprays and foam scrubbing. More sophisticated procedures will be covered in a separate chapter in this book.

1. Water Sprays

Water sprays, mists, and curtains have long been considered to have some degree of effectiveness in mitigating the hazard of airborne water-soluble vapors. In recent years, however, serious questions have been raised about the true effectiveness of these techniques. Test programs conducted with hydrogen fluoride at the Department of Energy (DOE) Hazardous Chemical Test Site have shown that water curtains can be effective in removing vapors [39]. However, the tests show that effective scrubbing requires water volumes orders of magnitudes greater than those currently in use in industry. In addition, they are subject to orientation and spray direction.

Since water curtains are far superior to portable water spray mechanisms, the DOE tests cast serious doubts on the practicality of portable water sprays. They may be beneficial in dispersion, deflection, or similar action, but not in removal of vapor from the air by absorption.

2. Foam Scrubbing

Foam systems may offer a mechanism to scrub soluble gases and particulates. Normally, once gases are released to the air, they are automatically lost to the atmosphere. In free space, this is probably true. In confined spaces, effective removal may be possible.

The effective scrubbing of contaminants from air by means of foam has been known for some time. The system was initially investigated for continuous online service [40]. It was very effective, but not economically attractive because of cost associated with recovery and recycle of the foam solution [41].

These costs disappear when the system is considered as an emergency-response procedure. Studies by the EPA [42] have shown that not only can the system be effective in the basic mode, but that foam chemistries can be formulated not only to enhance normal contaminant removal, but also to scrub materials with restricted water solubility.

Since technology already exists to convert normal ventilation systems to foam-generating systems instantaneously, the implementation of foam scrubbing is well within the existing state of the art. The sequence in Fig. 9 shows foam scrubbing. In Fig. 9a, vapor from a spill of titanium tetrachloride is drawn into fan duct. In Fig. 9b, water sprays are applied with little effect on the vapor plume. In Fig. 9c, foam generation is started with the immediate encapsulation and scrubbing of both TiO_2 and HCl, the materials in the plume.

Foam scrubbing was effectively used during U.S. Navy fire tests with lithium. The lithium oxide–hydroxide particulates were effectively removed. In addition, the water-soluble halocarbon decomposition products from the Halon extin-

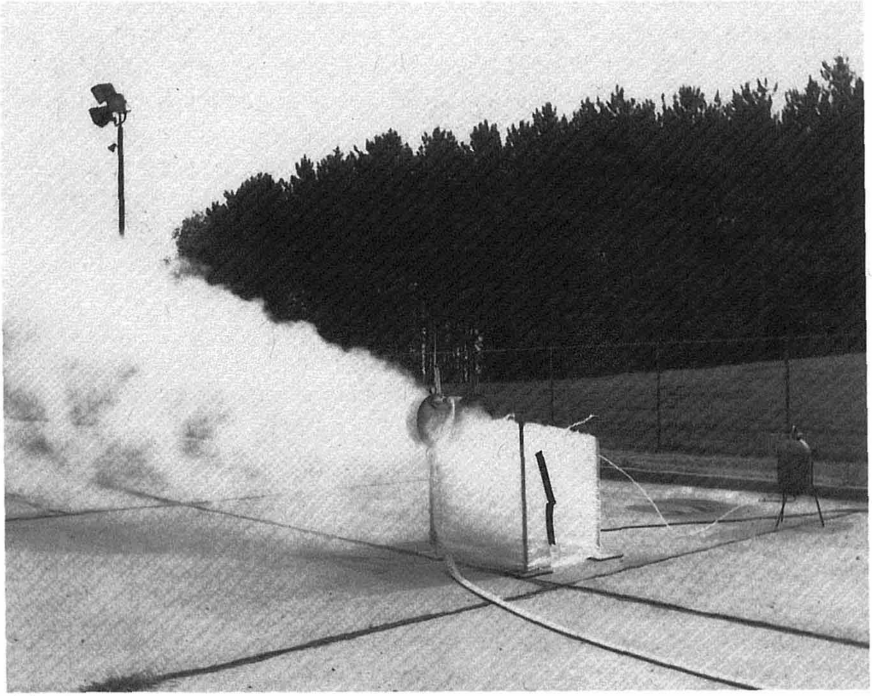

(a)

Figure 9 Foam scrubbing sequence with a simulated spill of titanium tetrachloride: (a) fan only; (b) fan and water spray; (c) foam generation.

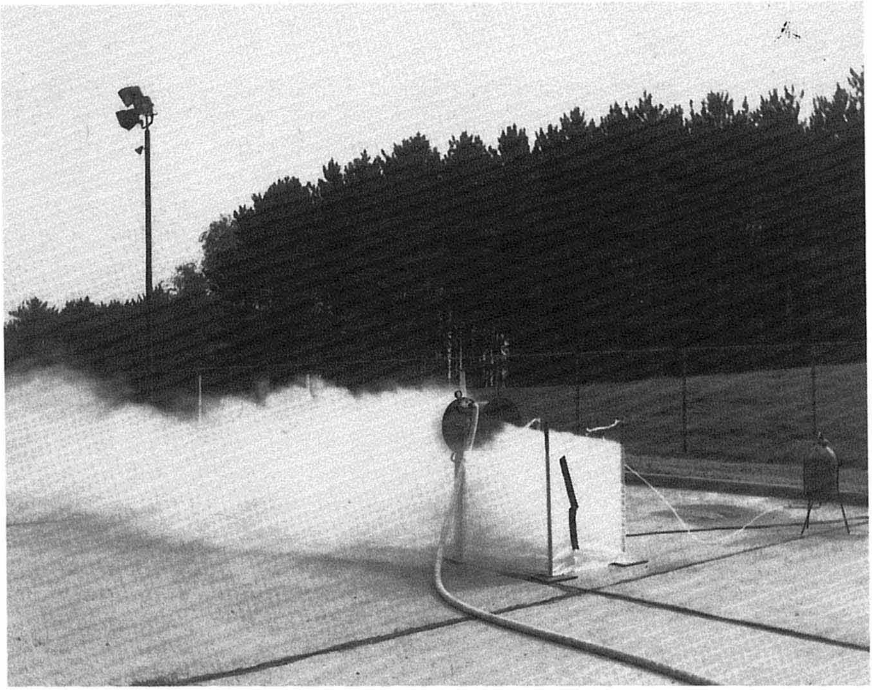

(b)

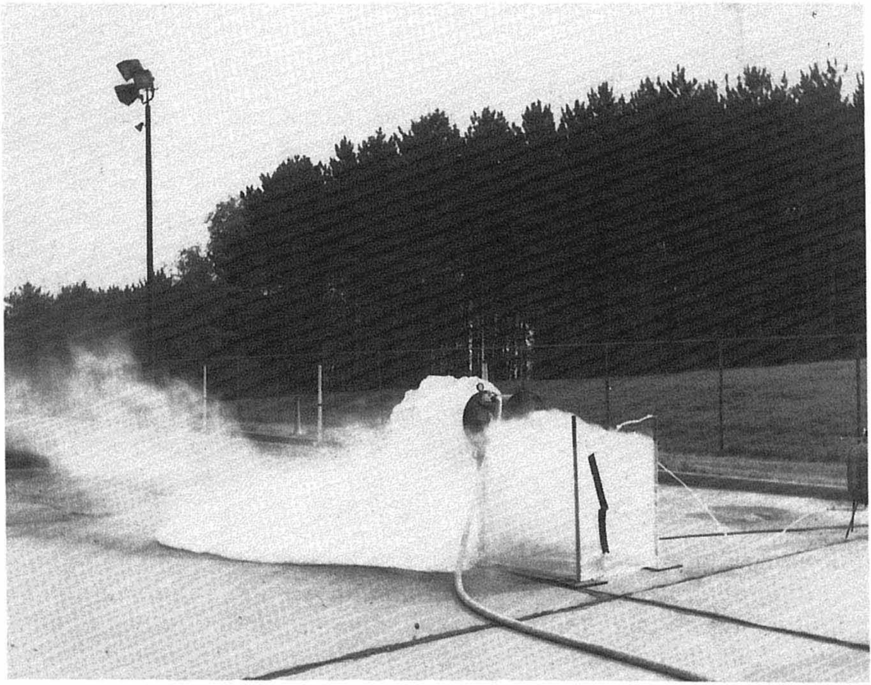

(c)

guishing agent were also removed, as evidenced by the acid pH of the foam drainage [43].

C. Dispersion, Diversion, and Dilution

The use of water sprays, fogs, or curtains to mitigate gas clouds from spills of volatile hazardous chemicals has a long history in the fire service. Data to support the effectiveness of such actions are meager, however. If there is any positive effect with these actions, it is in movement of the gas cloud and not in removal.

1. Dispersion

The direct discharge of water streams into the downwind vapor cloud created by the spill of a volatile chemical can have only a beneficial effect. The only concern is the magnitude of the benefit. The greater the force of the stream and the volume of the water, the more beneficial the effect. However, even under the best conditions, the magnitude of the effect will be small. The use of water sprays to disperse the vapor cloud may be merely a better-than-nothing procedure.

The water sprays should be made directly into the cloud in the downwind direction. Always be aware, by continuous monitoring, that the gas cloud is not migrating or eddying upwind. In some circumstances, gases can move upwind for short distances close to ground level.

2. Diversion

Frequently, it may be desirable to divert the gas cloud from its normal direction of movement. Diversion may be achieved over short distances when wind velocities are low and obstacles to movement exist, such as buildings.

Effective diversion requires large volumes of high-velocity water applied at maximum angle to the expected direction of movement of the gas cloud. Even under the best conditions, diversion is difficult and protecting downwind areas with water sprays cannot be assured.

Within the context of diversion, is the use of water sprays as a flame interrupter. In this action, a water spray or curtain is established across the path of the gas cloud, to act as a barrier between the gas source and potential downwind ignition sources. Although not guaranteed, it is usual for flame propagation to be interrupted by the water curtain. Thus, flame propagation from an ignition point back to the gas source is prevented.

3. Dilution

The potential for water sprays to dilute a gas cloud, either by absorption of vapor or the entrainment of air, is a common belief. As with the other perceived benefits of water sprays, the data are also meager for dilution, and the available data are unable to support the effectiveness of this type of action.

In a similar vein, the use of water sprays has been proposed as a mechanism to add heat to a gas to enhance buoyancy. Suggested materials are cold gases released by liquefied gases or those with high heats of solution, such as ammonia. Again, however, no data exist to support the proposed action.

If this type of action is considered, it is important to prevent water from reaching the actual spilled liquid. Water application to cold liquefied gases or a liquid with a large heat of solution will give a violent response and release of vapor.

V. IN SITU CONVERSION

Conversion of a spilled hazardous liquid to an inert, or at least a less hazardous form, directly at the spill sight, is an attractive mitigation mechanism. It not only reduces the immediate hazard, but simplifies the disposal process. Four procedures would fall in this category, direct dilution with water, neutralization, controlled burning, and chemical dispersion. The first three are pertinent to this chapter. Dispersants are basically applicable to spills on water, and that subject is beyond the scope of this chapter.

A. Dilution

Dilution, by definition, is the addition of water to reduce the concentration of water-soluble chemicals. Dilution is applicable to all liquids with a significant water solubility. Total miscibility is not necessary.

There are two potential problems with dilution: It will always cause an increase in the spill volume. Overflow of containment or the general increase of the area covered by the spill will need to be addressed if dilution is considered. Also of concern should be the potential for an increase in disposal costs because of the increased volume for disposal; however, disposal cost may be reduced. Dilution may allow direct discharge of the spill residue to sanitary sewers or similar waste water systems.

Materials acceptable for dilution include the inorganic acids and alkalis, the polar compounds, and some water-reactive materials. The polar materials are the simplest, since they are not reactive with water. Dilution reduces both the vapor hazard and the potential for ignition. Although not the best approach, water dilution will ultimately extinguish fires involving the polar compounds. The minimum level of dilution to achieve any benefit is 20%, but, for full mitigation with the polar materials, dilution should approach 80%.

Concentrated acids and alkalis will probably react aggressively with any water addition. With the strong acids—nitric, hydrochloric, and sulfuric—and for concentrated ammonium hydroxide, this reaction can be expected to be violent. With these materials, dilution mitigates the general hazard and may simplify cleanup and disposal, but the vapor hazard will be exaggerated until extensive dilution, at least 50%, has occurred.

Initial applications of water should be in the form of a fine spray or mist. This type of application should be continued until any reaction subsides. At that time the rate of application can be increased. Never add water below the surface of a spilled acid or alkali.

Ice offers a mechanism to add water to water-reactive materials with a minimum of reactivity. The ice is used until dilution has reached the point that water as such can be added. Only crushed ice should be used. Cubes, pellets, or similar forms may sink initially and be violently expelled from the spill by reaction. This can occur even if the ice pieces only partially submerge.

Water-reactive materials that yield a solid on hydrolysis, such as silicon and titanium tetrachloride (SiO_2 or TiO_2), are amenable to dilution with water, if no other mitigation procedure is available. Initially, the water needs to be gently added. This first application forms a floating layer of solid intermixed with the diluted liquid reaction products [30]. If the water application is continued so that it does not disrupt the slurry layer, the spilled material can be totally reacted. This is a slow process and will be accompanied by the exaggerated vapor release noted for the strong acids.

Because of the solid formation and liquid density differences, dilution tends to proceed from the top of the spill to the bottom, rather than as a uniform dilution of the total spill. This causes the exaggeration of the vapor hazard to be prolonged.

B. Neutralization

Dilution can change only the concentration, but neutralization can eliminate the hazard by converting hazardous materials to inert or nontoxic substances. Direct neutralization by liquid–liquid interaction is not considered feasible. The degree of reactivity will be orders of magnitude greater than simple dilution. To circumvent the problem of reactivity, solid neutralizers are used. Even with the solids, heats of reaction and formation are released.

The potential for the direct neutralization of the inorganic acids has been the basis for most work with solid neutralizing agents. Commercially, prepackaged systems employing an alkaline earth metal oxide as the basic ingredient are available [44]. The oxide is discharged as a fine powder from pressurized containers directly onto the spill.

Although it is certain that neutralization proceeds with the solid materials, there are few quantitative data available to determine how effective these actions are in mitigating the hazard. Users are warned about steam and other gas releases during the application of the solid neutralizers. These releases are due to the heat being generated by the neutralization action. This heat must also cause boil-off of the spilled material.

In April 1983, there was a major spill of red fuming nitric acid in Denver, Colorado. Gross amounts of crushed limestone were dumped onto the spill. News-paper reports stated that the residue was pH neutral, but no data were ever released to show how much, if any, of the acid was neutralized.

Subsequent to that spill, the U.S. Air Force, in cooperation with the EPA investigated the neutralization of nitrogen tetroxide using solid and slurried carbonate and bicarbonates [17,18]. Slurries were totally ineffective, causing violent reaction with the tetroxide.

The solid materials did not cause the same effect, but there was clearly an exaggeration of the vapor release rate. Subsequent analysis of the solid residue showed that less than 10% of the tetroxide had been neutralized, with the obvious conclusion that the other 90% had been lost by evaporation, probably at a faster rate than from a free spill of the same magnitude.

Neutralization can be accomplished only by using solid agents, but there is great uncertainty about the effectiveness of the procedure. The available data would indicate that only a small percentage of the spill is neutralized, with large losses of the spilled liquid through evaporation.

C. Controlled Burning

The mitigation of spills of flammable materials, particularly those of high volatility, may be best achieved by controlled burning. This subject has been addressed for the flammable liquefied gases and for some water-reactive materials in the previous section on foams. It is reiterated here to point out that controlled burning, using a foam cover, is possible with all water-immiscible, flammable liquids. The foam cannot be a film-forming variety, since that type has excellent resealing ability on open areas.

With polar compounds, controlled burning is possible by using water dilution to restrict the fire intensity. Be aware that fires involving the low molecular weight alcohols do not produce a visible flame. It may be necessary to use an infrared scanner or similar device to locate and identify burning areas.

The ultimate in controlled burning is a procedure called venting and burning. It is a procedure for tanks and like vessels that might be subject to catastrophic failure during an incident. It involves the use of shaped charges to penetrate and vent the vessel, with the simultaneous ignition of the venting flammable liquid. It is a listed procedure in NFPA guides [14], but it is a last resort mechanism.

VI. EMERGENCY CONTAINMENT

The transfer of a spilled liquid to a closed containment device at the spill site offers a mechanism to mitigate the general hazard of a hazardous materials. Such transfer must be fairly rapid and must occur as soon in the spill incident as possible. Actions that use vacuum trucks or systems to pump into alternate fixed containment devices are usually part of the preplanned on-site hazard response plan.

In addition to these, two procedures have evolved that use rapidly deployable emergency collection bags. In both procedures a furled or folded bag, which is deployed for use, is the basic item.

A. Gravity Flow

One system is a bag only. It is designed to accept liquid flowing to the opening by gravity [45]. The system seems very simple, requiring only the formation of a channel to direct the liquid into the bag opening. The major effort in the development was the bag itself. Chemical compatibility with a wide range of chemicals and the design of the opening were considered the most important features.

These were successfully accomplished, but in practice, impediments to use were revealed. First, use was limited to nonflammable materials. Air became entrained during filling, resulting in flammable vapor mixtures within the bag. The principal difficulty was effective diversion of a liquid into the bag. In a plant, permanent devices can be installed to drain liquid into collection devices. In the field or in the absence of a fixed system, diversion dams, ditches, or other channeling devices must be formed to direct the spill into the bag.

If the liquid must traverse unpaved areas, it is certain that some liquid will be absorbed by the ground. Ditching or other activities that break the surface, expose ground more susceptible to absorption than the normal surface. Such disturbed areas should be covered or lined with plastic sheeting to prevent the absorption.

Beyond these difficulties, there are those related to the stability of the bag when it is filling with liquid. These difficulties are common to all flexible collection bags and will be discussed fully as part of the next section on pumped systems.

B. Pumped Systems

The second approach to emergency collection employs a pump to pickup and discharge liquid into a collection bag [4]. In this development, the main effort also was the collection bag.

Two units were evolved, identical except for the power source. The first unit used battery power to allow use with flammable materials. Since, theoretically, the bag was inflated by the liquid only, with no air entering, it seemed safe. The second unit used a gasoline engine to drive the pump.

The battery-driven unit is shown in Fig. 10. It consists of a battery-driven explosion-proof motor, a centrifugal pump, a hose on a reel, appropriate valving, and fail-safe hose connections. A folded, 4000-gal–capacity, collection bag is held in the compartment at the rear of the unit. This bag is urethane-coated, nylon-reinforced polyvinyl chloride.

All items and materials were selected for severe corrosive chemical service. The bag exterior material was chosen for puncture resistance by objects that might be present at the spill site.

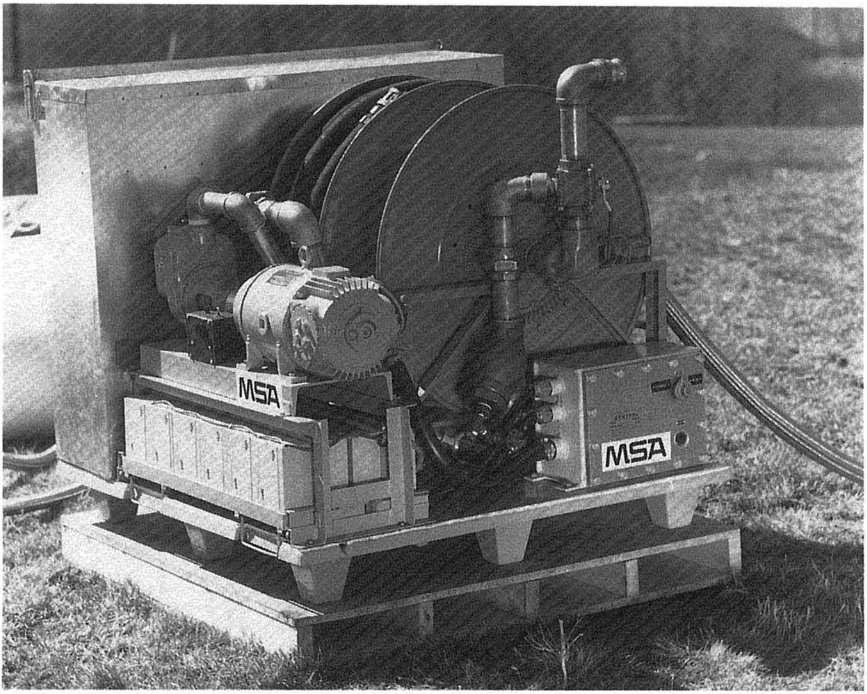

Figure 10 Battery-operated emergency collection system packaged unit.

One major impediment to the use of emergency collection systems using flexible bags, is the tendency for these bags to roll or slide on sloped ground. Simple pillow bags will roll on slopes as shallow as 2°. In the studies on the gravity-fill bags, considerable effort was expended in defining methods of retention of the bag on sloped ground. Temporary retention schemes, stakes, rocks, and such, were effective only for small liquid volumes, less than 1000 gal. Deploying the bag straight down the slope helps, but the bag begins to slide on slopes greater than 5° within the same volume restraints.

For the pumped system, a segmented bag was designed. As shown in Fig. 11, it consists of three legs fed from a header. This design is stable on slopes up to 15° for both roll and slide movement. It is an expensive design, however, and when it is considered that reuse of the bag is probably infeasible, it may be impractical.

Subsequent to the foregoing developments, the Air Force developed a similar unit for use during the propellant downloading of Titan II missiles. It approximated the pumped system of EPA, but used a peristaltic pump, because of the volatility of the propellants, and electric power from a remote generator [18].

Figure 11 Segmented collection bag deployed for use.

During the Air Force work, two other deterrents to the use of the bags were revealed. First, the bags needed a pressure relief system when volatile chemicals were involved. Second, material pumped into the bag had to be, at least partially, pumped out for disposal, since the bag could not be safely lifted when filled. The Air Force design allowed removal of liquid from the bag.

Although never used in a actual spill, the Air Force conducted numerous live tests of the collections system in combination with foam covering of propellant spills. Both systems performed as designed, showing that emergency collection can be used effectively, but not without some difficulty.

VII. SUMMARY

Mitigation procedures for spilled volatile liquid chemicals cover several technologies. Some were specifically designed for the purpose of spill mitigation, but many have evolved from existing techniques for fighting fires. Often the developments have been directed to transportation spills for which preknowledge of chemicals to be encountered is not possible. Early in the evolution of mitigation procedures, the EPA considered systems and techniques for in-plant spills or similar incidents in which chemicals could be identified in advance, and tools to combat the spill could be preplaced. Several of those developments proved feasible, but because of the need for special materials or equipment, they have never been widely used.

The best-developed and most widely used system is now the aqueous foams for vapor suppression. Sorbents, both absorbent and adsorbent, are next in line. The use of sorbents has been hindered by the limitation on quantitative data on specific chemicals for each of the many commercial materials now in the marketplace. Sorbents could also benefit from improved instructions on disposal.

Certain techniques, such as water sprays, neutralization, and dilution are in use, but are of questionable value. Others, such as freezing, cellular concrete, urethane dikes and plugs, and emergency collection, have demonstrated capabilities, but require special equipment or uncommon materials.

New technology continues to develop. Foam scrubbing is in this category. The evolving materials to thicken or gel oils may be adaptable to the volatile hazardous chemicals.

REFERENCES

1. U.S. Environmental Protection Agency (EPA), *Control of Hazardous Chemical Spills by Physical Barriers*, Report R2-73-185, March 1973.
2. Evaluation of foam concrete for rapid center-wall placement system, Department of Energy Contract DE-AC01-75 ET 12544, January 1979.
3. Evaluating rigid foams for construction and repairing mine stoppings, U. S. Bureau of Mines Contract J0308006, January 1984.
4. U. S. Environmental Protection Agency (EPA) *Emergency Collection System for Spilled Hazardous Materials*, Report 600/2-77-169, EPA, August 1977.
5. U. S. Environmental Protection Agency (EPA), *Feasibility of Plastic Plugs for Sealing Leaking Chemical Containers*, Report R2-73-251, EPA, May 1973.
6. U. S. Environmental Protection Agency (EPA), *Prototype System for Plugging Leaks in Ruptured Containers*, Report 600/2-76-300, EPA, December 1976.
7. U. S. Environmental Protection Agency (EPA), Sorbent Materials for Cleanup of Hazardous Spills, Report 600/2-82-030, EPA, July 1982.
8. R. W. Melvold and S. C. Gibson, *Sorbents for LiquidHazardous Substances Cleanup and Control*, Noyes Data, Park Ridge, NJ, 1987.
9. U. S. Environmental Protection Agency (EPA), *A Guidance Manual for Selection and Use of Sorbents for Liquid Hazardous Substance Release*, Report 600/2-87-047, EPA, November 1987.
10. U. S. Environmental Protection Agency (EPA), *Multipurpose Gelling Agent and Its Application to Spilled Hazardous Materials*, Report 600/2-77-151, EPA, August 1977.
11. U. S. Environmental Protection Agency (EPA), *System for Applying Powdered Gelling Agents to Spilled Hazardous Materials*, Report 600/2-78-145, EPA, July 1978.

12. U. S. Coast Guard, Feasibility study of response techniques for discharges of hazardous chemicals that float on water, Report CG-D-56-77, October 1976.
13. U. S. Environmental Protection Agency (EPA), *An Evaluation of Cooling as a Vapor Mitigation Procedure for Spilled Volatile Chemicals*, Report 600/2-81-214, EPA, October 1981.
14. National Fire Protection Association (NFPA), RP471 *Recommended Practice for Responding to Hazardous Material incidents*, NFPA, Quincy, MA, 1992.
15. J. R. Pfann and C. A. Sumner, Sulfur trioxide spill control, *Proceedings of the 1976 Conference on the Control of Hazardous Material Spills*, Library of Congress No. 76-12218.
16. U. S. Air Force (USAF), *Engineering Report for Mineral Oil Oxidizer Vapor Suppression*, Contract F42600-80-D-0947, USAF, September 1981.
17. U. S. Environmental Protection Agency (EPA), *The Control of the Vapor Hazard from Spills*, Report 600/2-81-215, EPA, October 1981.
18. U. S. Air Force (USAF), *Foam Development for Hypergolic Propellant Spill Control, Summary Report*, Contract F42600-83-C-0615, USAF, March 1985.
19. National Fire Protection Association (NFPA), Standard 11, *Low Expansion Foam*, NFPA, Quincy, MA, 1992.
20. Underwriters Laboratories (UL), Procedure 162, *The Standard for Foam Equipment and Liquid Concentrates*, UL, 1992.
21. U. S. Environmental Protection Agency (EPA), *Evaluation of Foams for Mitigating Air Pollution from Hazardous Spills*, Report 600/2-82-029, EPA, July 1982.
22. U. S. Environmental Protection Agency (EPA), *Handbook for Using Foams to Control Vapors from Hazardous Spills*, Report 600/8-86-019, EPA, July 1986.
23. N. J. Alvares and A. E. Lipska, The effect of smoke on the production and stability of high expansion foam, Presented at Spring Meeting, Western States Section, The Combustion Institute, 1971.
24. W. Corderre, *Spill Control System for $TiCl_4$ at Tioxide Canada*, Report to the Chemical Manufactures Association, 1986.
25. D. Kent, *New spill control foam*, Industrial Fire World Exposition, 1986.
26. U. S. Army, *Development of a Stable High Expansion Water Based Foam*, Contract DAAK70-C-0220, 1978.
27. American Society for Testing and Materials (ASTM), *Using Aqueous Foams to Control the Vapor Hazard From Immiscible Volatile Liquids*, ASTM, Standard Guide F1129, 1988.
28. American Gas Association, *Vapor Dispersion, Fire Control and Fire Extinguishment*, Report IS 100-1, AGA, 1974.
29. National Fire Protection Association (NFPA), Standard 11A, *Medium and High Expansion Foam*, NFPA, Quincy, MA, 1992.
30. R. H. Hiltz, Mitigation of the vapor hazard from silicon tetrachloride using water based foam, *J. Hazardous Chem.*, 5:169–175 (1982).
31. R. H. Hiltz, Control of the vapor hazard of spilled volatile chemicals with water based foams—a state of the art review, Ohio EPA Inland Water Spills Conference, 1985.
32. E. Norman, Vapor mitigation by the use of foam, *Proceedings 1978 National Conference on Control of Hazardous Material Spills*, 1978.

33. L. DiMaio and E. Norman, Continuing studies of hazardous materials vapor mitigation using aqueous foams, *Plant Operations Prog.*, 9:135–137 (1990).
34. R. H. Hiltz and J. Brugger, Foam scrubbing as a mechanism to mitigate large toxic vapor releases, *Sixth International Symposium on Loss Prevention and Safety Promotion in the Process Industry*, Norwegian Society of Chartered Engineers, 1989.
35. C. H. Buschman, Experiments on the dispersion of heavy gases and abatement of chlorine gas clouds, *Fourth International Symposium on Transport of Hazardous Cargoes by Sea and Inland Waterways*, National Academy of Science, Washington, DC, 1975.
36. R. H. Hiltz and S. Gross, *The Use of Foams to Control the Vapor Hazard from Liquefied Gas Spills*, Library of Congress No. 80-51356.
37. C. Harris, Mitigation of accidental toxic gas releases, *Proceedings of the International Symposium on Preventing Major Chemical Accidents*, Center for Chemical Process Safety, American Institute of Chemical Engineers, 1987.
38. MSA Research Corp., *Vinyl Chloride Monomer*, undated.
39. K. Shatz, *Mitigation of Hydrogen Flouride Releases by Application of Water Sprays*, Mobil Research and Development Corporation, 1990.
40. U. S. Environmental Protection Agency (EPA), *Application of Foam Scrubbing to Fine Particle Control*, Report 66/2-76-125, EPA, 1976.
41. U. S. Environmental Protection Agency (EPA), Evaluation of Foam Scrubbing as a Method for Collecting Fine Particles, Report 600/2-77-197, EPA, 1977.
42. P. M. Brown, R. H. Hiltz, and J. E. Brugger, Foam scrubbing for control of toxic gas releases, *Symposium on the Control of Accidental Releases of Hazardous Gases*, American Institute of Chemical Engineers, August 1989.
43. R. H. Hiltz, P. M. Brown, and J. E. Brugger, Application of foam scrubbing to the mitigation of toxic vapor releases, *Technical Seminar on Chemical Spills*, Environment Canada, April 1990.
44. The Ansul Company, *Metal-X Systems*, Marinette, Wisconsin.
45. U. S. Environmental Protection Agency (EPA), *Capture and Containment Systems for Hazardous Materials Spills on Land*, Report 600/2-84-170, EPA, October 1984.

11

Equipment Maintenance

Trevor A. Kletz
University of Technology, Loughborough, Leicestershire, England

I. INTRODUCTION

In plants of all types, the preparation of equipment for maintenance is a major cause of serious accidents. In the chemical industry 30% of accidents are maintenance-related, and half of these involve the release of harmful substances [1]. Sometimes procedures are poor. At other times procedures are satisfactory, but are not always followed. This chapter describes the essentials for good procedures and the actions needed to make sure that they are followed. It also describes (see Sec. V) several incidents that have occurred because procedures were poor or ignored.

One way of reducing the number of accidents associated with maintenance operations is to carry out less maintenance. In the nuclear industry, maintenance is often difficult or impossible, and very reliable plants have been developed. For example, centrifuges for concentrating uranium-235 are designed to run for 10 years without maintenance. It would be far too expensive for the process industries to build such reliable plants, but some movement in that direction might be justified and should be considered during design. There has been little serious study of the optimum degree of reliability in process plant equipment, contractors often aiming for minimum capital cost and ignoring running costs.

The nuclear industry does not achieve high reliability by massive duplication or by making everything thicker and stronger, but by paying great attention to detail in design and construction. Similarly, in the process industries, many failures occur because the construction team did not follow the design in detail or did not follow good-engineering practice when details were left to their discretion. Maintenance can be reduced by specifying designs in detail and then carrying out thorough checks, during and after construction, to make sure that the design has been followed and that good-engineering practice has been followed when details have not been specified [2].

The preparation of equipment for maintenance normally makes use of a permit-to-work (or clearance) system. A permit-to-work is a document that lists the following:

a. The job to be done
b. The hazards to be considered (such as toxicity or flammability)
c. The actions already taken to remove or reduce the hazards (such as sweeping out hazardous chemicals with nitrogen, followed by tests) and to keep out harmful substances (such as blinding)
d. The remaining hazards (such as traces that may be left or trapped pressure)
e. The precautions to be taken by the maintenance team (such as wearing protective clothing)

Figure 1 shows a good design for a permit. Note that it contains spaces for the signatures of the persons who issue and accept the permit and that it shows the period for which it is valid. More than one maintenance department may want to work on the equipment and, therefore, space is therefore provided so that it can be accepted by several different groups. Permits are usually accepted by the person who will actually carry out the maintenance, but if more than one person (from the same department) is involved, a foreman or senior mechanic may accept it on behalf of the team.

The permit formalizes the handover of the equipment from the operating team to the maintenance team, that is, from members of the team who are responsible for preparing the equipment, to those who will carry out the repairs. These two tasks are normally carried out by different persons. The completion of the permit and the handover provides an opportunity to check that all necessary precautions have been taken. Accidents are more likely when the same person carries out both tasks (discussed in Sec. II.F). If we do not insist on precautions similar to those described in the following, a permit-to-work can become a permit to live dangerously, rather than one to work safely.

No procedure can make maintenance nonhazardous. It can, however, reduce the chance that hazards will be overlooked, list ways of controlling them, and inform those doing the job of the precautions they should take.

In addition to the hazards that should be considered when preparing equipment for maintenance, the maintenance itself may be hazardous: it may involve the use of hand and power tools, working at heights or in excavations, working near cranes or radioactive sources, and so on. These hazards are quite distinct from those associated with the materials inside the equipment and will not be discussed.

II. ESSENTIAL FEATURES OF A PERMIT SYSTEM

A. Isolation

The first action to be taken when preparing equipment for maintenance is to isolate it from other parts of the plant that contain hazardous materials. Poor or missing isolation has been the cause of many serious accidents (see Sec. V.A).

Do not rely on valves for isolation, as they are likely to leak and may be opened in error. Use blinds (also known as spades or slip-plates) or disconnection and blanking unless the job is so quick that blinding (or disconnection) would take as long and be as hazardous as the main job. Valves used for isolation (including isolation while fitting blinds or disconnecting) should always be locked (e.g., by a padlock and chain). The method of isolation should be stated on the permit-to-work (see Sec. V.A, items 1–4).

Blinding should not be authorized on the same permit as the main job. A separate permit should be issued for blinding (or disconnection). When this is complete, the permit has been returned, and the process foreman or lead operator is satisfied that the blinding (or disconnection) is correct, then he (or she) should issue a permit for the main job. When this is complete, a third permit should be issued for removal of the blind (or for disconnection).

Insertion of the blinds is often the most hazardous part of the whole maintenance operation. Although the rest of the plant is isolated by valves, they may be leaking. The joints should be broken with care. Depending on the degree of hazard, test cocks should be provided and, in some cases, double-block and bleed valves, as shown in Fig. 2, so that blinds can be inserted safely (see Sec. V.A, item 5).

Blinds should be made to the same standard (pressure rating and material of construction) as the plant, and their tags should project above the pipework so that they are easily seen, even when the pipework is insulated. Plants should be designed so that blinds can be inserted without difficulty; that is, there should be sufficient flexibility in the pipework, or a slip-ring or figure-eight plate (Fig. 3) should be used. This is particularly important near pumps which are usually surrounded by rigid pipework, but are maintained while the rest of the plant is on line. Blinding has lapsed because the designers were not involved when the permit system was drawn up and they designed pipework in which it was difficult or impossible to insert blinds.

Figure-eight plates should be installed when joints have to be blinded frequently. Although the initial cost is higher, they are always available on the job, whereas loose blinds tend to disappear.

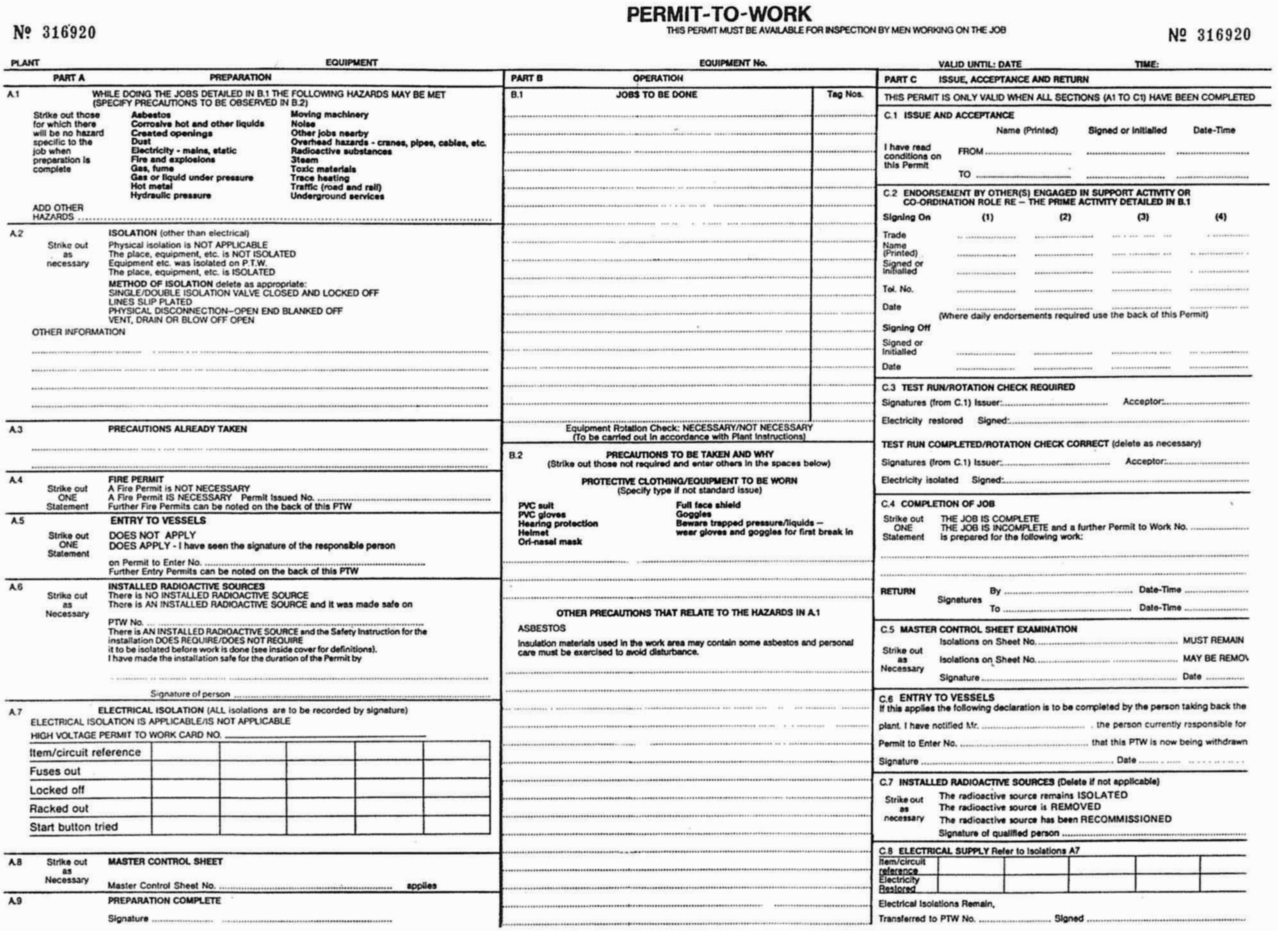

№ 316920

PERMIT-TO-WORK

THIS PERMIT MUST BE AVAILABLE FOR INSPECTION BY MEN WORKING ON THE JOB

№ 316920

PLANT EQUIPMENT EQUIPMENT No. VALID UNTIL: DATE TIME:

PART A PREPARATION

A.1 **WHILE DOING THE JOBS DETAILED IN B.1 THE FOLLOWING HAZARDS MAY BE MET (SPECIFY PRECAUTIONS TO BE OBSERVED IN B.2)**

Strike out those for which there will be no hazard specific to the job when preparation is complete

Asbestos
Corrosive hot and other liquids
Created openings
Dust
Electricity - mains, static
Fire and explosions
Gas, fume
Gas or liquid under pressure
Hot metal
Hydraulic pressure
Moving machinery
Noise
Other jobs nearby
Overhead hazards - cranes, pipes, cables, etc.
Radioactive substances
Steam
Toxic materials
Trace heating
Traffic (road and rail)
Underground services

ADD OTHER HAZARDS ....

A.2 **ISOLATION** (other than electrical)

Strike out as necessary

Physical isolation is NOT APPLICABLE
The place, equipment, etc. is NOT ISOLATED
Equipment etc. was isolated on P.T.W.
The place, equipment, etc. is ISOLATED

METHOD OF ISOLATION delete as appropriate:
SINGLE/DOUBLE ISOLATION VALVE CLOSED AND LOCKED OFF
LINES SLIP PLATED
PHYSICAL DISCONNECTION–OPEN END BLANKED OFF
VENT, DRAIN OR BLOW OFF OPEN

OTHER INFORMATION

A.3 **PRECAUTIONS ALREADY TAKEN**

A.4 **FIRE PERMIT**

Strike out ONE Statement

A Fire Permit is NOT NECESSARY
A Fire Permit IS NECESSARY Permit Issued No. ....
Further Fire Permits can be noted on the back of this PTW

A.5 **ENTRY TO VESSELS**

Strike out ONE Statement

DOES NOT APPLY
DOES APPLY - I have seen the signature of the responsible person
on Permit to Enter No. ....
Further Entry Permits can be noted on the back of this PTW

A.6 **INSTALLED RADIOACTIVE SOURCES**

Strike out as Necessary

There is NO INSTALLED RADIOACTIVE SOURCE
There is AN INSTALLED RADIOACTIVE SOURCE and it was made safe on
PTW No. ....
There is AN INSTALLED RADIOACTIVE SOURCE and the Safety Instruction for the installation DOES REQUIRE/DOES NOT REQUIRE it to be isolated before work is done (see inside cover for definitions).
I have made the installation safe for the duration of the Permit by

Signature of person ....

A.7 **ELECTRICAL ISOLATION** (ALL isolations are to be recorded by signature)

ELECTRICAL ISOLATION IS APPLICABLE/IS NOT APPLICABLE

HIGH VOLTAGE PERMIT TO WORK CARD NO. ____________

Item/circuit reference					
Fuses out					
Locked off					
Racked out					
Start button tried					

A.8 **MASTER CONTROL SHEET**

Strike out as Necessary

Master Control Sheet No. .... applies

A.9 **PREPARATION COMPLETE**

Signature ....

PART B OPERATION

B.1 JOBS TO BE DONE	Tag Nos.

Equipment Rotation Check: NECESSARY/NOT NECESSARY
(To be carried out in accordance with Plant Instructions)

B.2 **PRECAUTIONS TO BE TAKEN AND WHY**
(Strike out those not required and enter others in the spaces below)

PROTECTIVE CLOTHING/EQUIPMENT TO BE WORN
(Specify type if not standard issue)

PVC suit
PVC gloves
Hearing protection
Helmet
Ori-nasal mask
Full face shield
Goggles
Beware trapped pressure/liquids – wear gloves and goggles for first break in

OTHER PRECAUTIONS THAT RELATE TO THE HAZARDS IN A.1

ASBESTOS

Insulation materials used in the work area may contain some asbestos and personal care must be exercised to avoid disturbance.

PART C ISSUE, ACCEPTANCE AND RETURN

THIS PERMIT IS ONLY VALID WHEN ALL SECTIONS (A1 TO C1) HAVE BEEN COMPLETED

C.1 **ISSUE AND ACCEPTANCE**

I have read conditions on this Permit		Name (Printed)	Signed or Initialled	Date-Time
	FROM			
	TO			

C.2 **ENDORSEMENT BY OTHER(S) ENGAGED IN SUPPORT ACTIVITY OR CO-ORDINATION ROLE RE – THE PRIME ACTIVITY DETAILED IN B.1**

Signing On	(1)	(2)	(3)	(4)
Trade				
Name (Printed)				
Signed or Initialled				
Tel. No.				
Date				

(Where daily endorsements required use the back of this Permit)

Signing Off	(1)	(2)	(3)	(4)
Signed or Initialled				
Date				

C.3 **TEST RUN/ROTATION CHECK REQUIRED**

Signatures (from C.1) Issuer: .... Acceptor: ....

Electricity restored Signed: ....

TEST RUN COMPLETED/ROTATION CHECK CORRECT (delete as necessary)

Signatures (from C.1) Issuer: .... Acceptor: ....

Electricity isolated Signed: ....

C.4 **COMPLETION OF JOB**

Strike out ONE Statement

THE JOB IS COMPLETE
THE JOB IS INCOMPLETE and a further Permit to Work No. .... is prepared for the following work:

RETURN Signatures

By .... Date-Time ....
To .... Date-Time ....

C.5 **MASTER CONTROL SHEET EXAMINATION**

Strike out as Necessary

Isolations on Sheet No. .... MUST REMAIN
Isolations on Sheet No. .... MAY BE REMOV
Signature .... Date ....

C.6 **ENTRY TO VESSELS**

If this applies the following declaration is to be completed by the person taking back the plant. I have notified Mr. .... the person currently responsible for Permit to Enter No. .... that this PTW is now being withdrawn

Signature .... Date ....

C.7 **INSTALLED RADIOACTIVE SOURCES** (Delete if not applicable)

Strike out as necessary

The radioactive source remains ISOLATED
The radioactive source is REMOVED
The radioactive source has been RECOMMISSIONED
Signature of qualified person ....

C.8 **ELECTRICAL SUPPLY** Refer to Isolations A7

Item/circuit reference					
Electricity Restored					

Electrical Isolations Remain,

Transferred to PTW No. .... Signed ....

DAILY OR SHIFT ENDORSEMENT IN ACCORDANCE WITH SITE INSTRUCTIONS

I have read the conditions on this Permit (overleaf) ....

DATE	FIRE PERMIT NO.	ENTRY PERMIT NO.	PROCESS	TRADE 1	TRADE 2	TRADE 3	CONTRACTOR

Figure 1 A permit to work. The master control sheet (Item c.5) cross references other jobs covered by the same installation. The back of the form contains spaces for daily or shiftly renewals. The actual size of this form is 17 × 12½ inches.

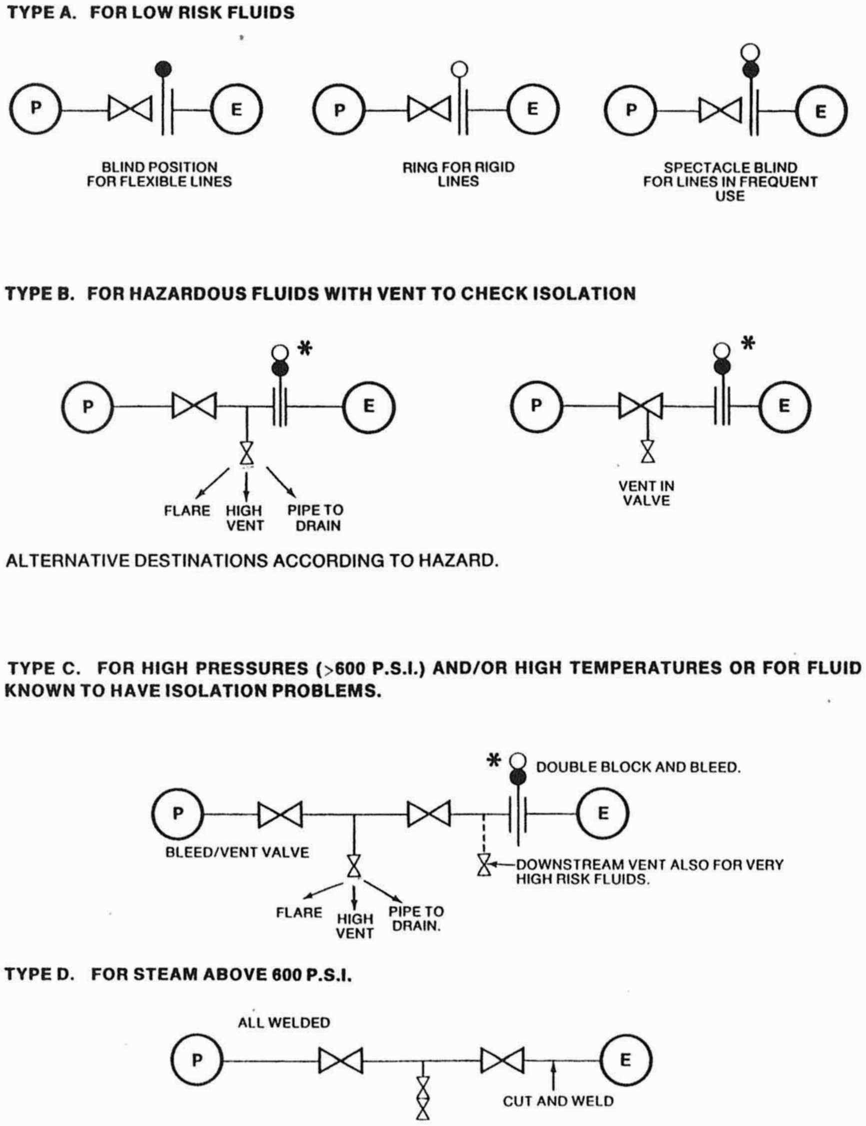

Figure 2 Methods of isolating equipment for maintenance: E, equipment under-maintenance; P, plant up to pressure; *, blind (slip-plate) or ring is required.

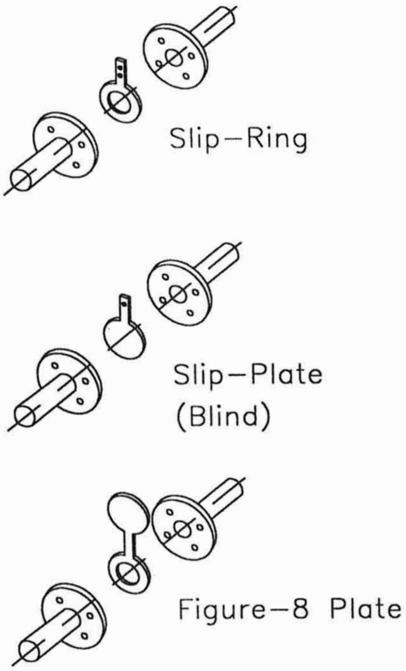

Figure 3 Various types of flange plates used during maintenance operations.

If possible, blinds should be inserted at high points in the pipework, as any liquid not drained off will accumulate at low points; drains should be at low points.

Normally, each item of equipment is isolated individually, but sections of plant may be isolated as a whole when the whole section is shutdown.

Most valves are easy to lock off, as a chain can be passed through the handle and padlocked. Holes can be drilled in solid handles. Figure 4 shows some ways of locking-off cocks and ball valves.

Isolation for entry requires extra precautions. Blinds should be at least 1/4-in. thick. Many companies insist on disconnection of pipework. Electricity should be disconnected.

Electricity is normally isolated by locking-off or by removal of fuses. Do not leave them lying around for anyone to replace. Always try out electrical equipment after defusing to check that the correct fuses have been withdrawn. Periodic checks should be made to confirm that the labeling of fuses and equipment is the same. Always remove fuses when the electrical side of equipment, for example, a motor, is maintained (see Sec. V.A, item 8).

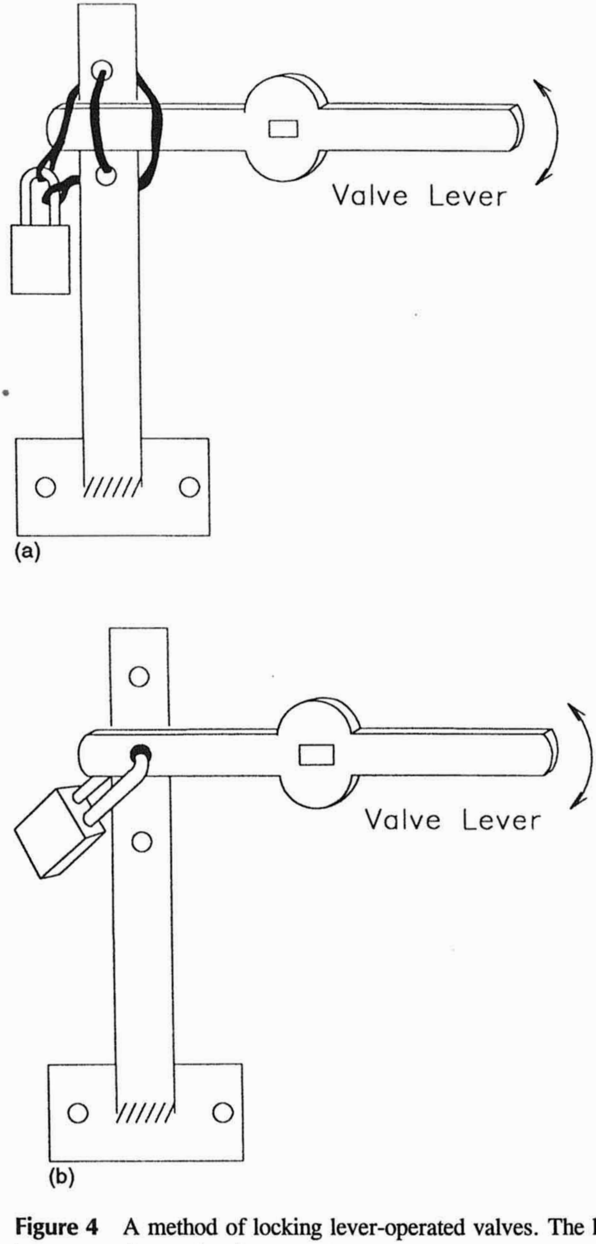

Figure 4 A method of locking lever-operated valves. The hole in the valve lever should be rectangular so that it cannot be replaced at right angles to its correct position.

When isolating electrical equipment before maintenance, do not overlook cathodically protected pipelines, or sparking may occur. They should be grounded and 24 h allowed for the establishment of equilibrium.

B. Freeing from Hazardous Materials

Equipment that is to be maintained should be freed, as far as possible, from hazardous materials. This is normally carried out after the equipment has been isolated by valve operation, but before blinds have been inserted. However, if the valves are leaking, the operation may have to be repeated (or analyses checked) after the blinds have been inserted.

The method used for removing hazardous materials depends on the nature of the material inside the equipment. Gases can be removed by sweeping out with air, or with nitrogen if they are flammable. Sometimes, the exit gas can be discharged to atmosphere, but often it has to be sent to a scrubber or flare system. Sweeping out can be carried out in two ways: by raising the pressure in the equipment to that of the compressed air or nitrogen supply and then blowing it off, or by allowing the air or nitrogen to enter at one end of the equipment and leave at the other. The former method is the better for equipment of irregular shape, such as pipework with deadends, whereas the latter method is better for long, thin equipment, such as pipelines without branches.

Liquids can be blown out with compressed air or nitrogen and recovered. Traces of water-soluble liquids can be removed by washing with water, and traces of oils can be removed by steaming. A vacuum can be formed as steam condenses. If the equipment cannot withstand a vacuum, make sure that the vent openings in the vessel are large enough to prevent vacuum formation. Heavy oils and materials that polymerize are very difficult, or impossible, to remove completely and traces may remain. Do not wash stainless steel equipment with water unless the water is chloride-free, or stress corrosion cracking may occur. Before filling equipment with water, make sure that it can withstand the weight.

The need to clean equipment for maintenance should be considered during design (and checked during hazard and operability studies) and suitable connections provided for compressed air, nitrogen, and so on.

Tests should be carried out to make sure that the concentration of any hazardous material remaining is below an agreed level. For entry, these levels should be less than 20% of the lower flammable limit and less than the threshold limit value (or permissible exposure limit; see Chapter 2). Tests should be carried out well inside the equipment, using long sample tubes; equipment of complex shape, such as some pipework, should be tested in several places.

The use of breathing apparatus and portable gas detector alarms should be considered when breaking into lines that have contained toxic gas or vapor.

Steam, water, and compressed air lines in plant areas should be tested before maintenance work (especially hot work; see Sec. II.D) is allowed on them, as such lines can become contaminated with process materials as the result of reverse flow through connecting lines (see Sec. V.A, item 1).

Another hazard is trapped pressure; drain or vent lines may be choked; hence, equipment that has been under pressure should always be opened in a controlled way, even though it has been drained or vented. For example, the bolts on a flanged joint fartherest from the person breaking it should be broken first (see Sec. V.B, items 1–3).

As well as the hazards that arise from the substances present inside equipment, one should also consider any hazards present in the surroundings, for example, leaks from sample, vent and drain lines, and other maintenance operations. If a pipeline passes through an area controlled by another foreman, one foreman will understand the hazards of the material inside the pipeline, whereas another foreman will understand the hazards of the surroundings. One foreman should issue the permit and the other should countersign it (see Sec. V.B, item 4).

C. Identification

Many accidents have occurred because maintenance workers opened up the wrong piece of equipment. They should be left with no doubt which is the right pump, pipeline, or other. Experience shows that describing the equipment, pointing it out, or even showing it to the maintenance worker, is not sufficient. By the time the correct tools have been collected, he or she may have forgotten and may open up the next pump or pipeline. Chalk marks are no better; they can be washed off by rain, or an old chalk mark may be mistaken for the new one.

Equipment that is under repair should be numbered or labeled unambiguously, and the number written on the permit-to-work. Temporary numbered labels should be used if there are no permanent ones. If a pipeline is to be broken, the label should be fitted to the flange that is to be unbolted. If a line is to be cut, the label should be fitted at the point at which it is to be cut.

Instructions such as, “The pump you repaired last week needs fixing again,” are recipes for accidents.

D. Hot Work

Many toxic materials are also flammable and additional precautions, therefore, are necessary when carrying out hot work, that is, work involving the use of naked flames, electrical equipment (unless intrinsically safe), diesel or gasoline engines, or the production of sparks. Tests for flammable gases or vapors should be carried out before work starts, and then at frequent intervals or, preferably, continuously. A test at 8 AM does not prove that the location will be gas-free at 4 PM. Tests should be carried out inside the equipment, to confirm that all flammable gas or liquid has been removed, and also outside the equipment to confirm that there are no leaks from other equipment. Hot work should not take place if the concentration of flammable gas is higher than 20% of the lower flammable limit, as concentrations may be higher elsewhere.

If there are any pools of water present, then a leak of an immiscible liquid, such as a light oil, hundreds of meters away, may cover the water with a thin film that will not be detected by a gas detector unless it is placed very close to the water surface. Nevertheless, the oil may ignite hundreds of meters away from the leak point and flash back to the source.

High-boiling point liquids, which are not flammable at ambient temperatures, but only when heated above their flash points, cannot be detected by combustible gas detectors and, as already stated, are often difficult to remove completely. On many occasions, they have caught fire or exploded when welding was carried out nearby. It may be necessary in such cases to fill the equipment with nitrogen before hot work starts. The volume to be inerted can often be reduced by partially filling with water. If it is difficult to prevent the nitrogen escaping, then equipment may be filled with fire-fighting foam generated with nitrogen but *not* with normal air-generated foam.

E. Entry to Vessels and Other Confined Spaces

Many persons have been killed because they entered confined spaces, including excavations, that contained a toxic or irrespirable atmosphere, and the following additional precautions should be taken before such entry is allowed. Confined spaces should be defined; for example, as any space more than 1-m deep in which the depth is greater than the width.

a. Authorization for entry should be made at a more senior level than authorization for normal maintenance.
b. Isolation should be made by disconnection or blinding of all connecting lines (including coils), and blinds should be at least 1/4-in. thick. Blinds should be placed as close to the vessel as possible. They should be placed on the vessel side of isolation valves; otherwise, liquid may be trapped between the valve and the blind and may then evaporate when workers are inside the vessel. Electrical equipment should be disconnected.
c. Gas freeing should be to a high standard. Continuous forced ventilation may be necessary. If entry is to take place without breathing apparatus being worn, the concentration of toxic gases should be below the threshold limit value (TLV) (or permissible exposure limit, see Chapter 2) and the concentration of oxygen should be between 20 and 22%. The concentration of flammable gases should always be below 20% of the lower explosive limit (LEL). If toxic liquids have to be introduced, for example, for crack detection, then spillage of the entire quantity introduced should not raise the concentration

of toxic vapor above 20% of the LEL, or above the TLV if breathing apparatus is not worn.

The TLV normally refers to the time-weighted average TLV, not the short-term exposure limit, as exposure usually lasts for more than 15 min.

It is a good practice for all people entering a vessel to carry small portable oxygen analyzers with alarms. They sound an alarm if the oxygen concentration rises or falls.

d. Sludges and other deposits may give off gas when disturbed; therefore, if they are present, breathing apparatus should be worn, or gas testing should be carried out continuously. If baffles are present and it is not possible to see behind them, then assume that dirt or sludge is present (see Sec. V.A, item 7).
e. If a manhole has been removed ready for entry, but the entry permit has not yet been signed, then a barrier should be locked across the manhole. This is particularly important if the atmosphere is irrespirable, as it is not necessary to fully enter the vessel to be killed. Just putting your head inside can kill you (see Sec. V.E, item 5).
f. A standby person should normally be present at the entrance to a vessel when anyone is inside (see Sec. V.I, item 3). Before authorizing entry, ask how a person will be rescued if overcome inside. One person cannot pull another vertically out of a manhole unaided.
g. A group of vessels may be treated as a single vessel and disconnected or blinded as a group, if the connecting lines are large, free from valves or other obstructions, and clean. For example, a distillation column, reflux condenser, and reflux drum may be isolated as a unit.
h. Entry to an irrespirable atmosphere (or one containing so much toxic material that death could occur within minutes) should never be permitted except in the most exceptional circumstances. The person or persons inside should be visible to the standby person (or in continuous radio contact), and a rescue team should be available on the job, not some distance away.
i. Entry for rescue should never take place without breathing apparatus. Many workers have been killed because they entered vessels to rescue colleagues who had collapsed.

F. Maintenance Operations Carried Out by Operators

Normally, one person prepares equipment for maintenance and issues the permit while another carries out the maintenance. The involvement of two people and the filling-in of a permit provide an opportunity to check that all necessary precautions have been taken. In some plants, operators are allowed to open up filters, autoclaves, or other pressure vessels using quick-release couplings. On many occasions, as a result of a momentary lapse of attention (something that happens to all of us from time to time), an operator has opened up a vessel before blowing off the pressure and has been killed or injured when the door or cover blew open with great violence (see Sec. V.F). To prevent such incidents, whenever quick-release devices are installed on pressure equipment

a. Interlocks should be fitted so that the vessel cannot be opened until the source of pressure is isolated and the vessel is vented, and
b. The door or cover should be designed so that two operations are required to open it. The first operation should open the door or cover only a few millimeters, and it should still be capable of withstanding the full pressure. If any pressure is present it can be allowed to blow off through the gap, or the door can be resealed. A second operation is needed to open the door fully [3].

In some plants, operators are allowed to carry out simple maintenance jobs. Without the pause for thought and involvement of two people provided by the permit procedure, sooner or later someone will open up equipment that has not been properly isolated or freed from hazardous materials. Before carrying out even the simplest maintenance task, operators should, therefore, complete a check list—in effect, issuing a permit to themselves—or, better, the foreman, lead operator, or another operator should issue them a permit.

G. Other Features of a Permit-to-Work System

As already stated, the permit system should allow for the situation in which more than one maintenance group (such as mechanical, electrical, control, painters, cleaners, or others) wish to work on an item of equipment. Each group should accept and return the permit, and there should be provision for this on the permit. Some companies use multiclasps (multiple hasp devices) so that each maintenance group (mechanical, instruments, electrical; or even each workman) can use their own padlocks for isolation of electrical equipment.

If a plant under construction is isolated from a running plant by a fence, then the normal permit procedure is not necessary, but entry to vessels and other confined spaces should always be covered by permits. (Note that if a tank is being built, once the height exceeds the diameter it becomes a confined space; excavations are similar.) Construction on an operating site needs close supervision and a separate permit for each job. Supervision of the contractors should not be left to a busy foreman, whose primary job is running the plant; a special supervisor should be appointed,

Connection of new equipment to an existing plant should always be covered under a special permit, not under the permit to construct, and should be carried out by the normal maintenance team, not by contractors (see Sec. V.H, item 3).

Equipment sent outside the plant for repair, modification, or scrapping should, whenever possible, be thoroughly cleaned. If this is not possible, then a certificate should be fixed to the equipment describing the hazards and the precautions necessary; for example, "Traces of solids present which may give off toxic fumes when heated. Breathing apparatus should be worn. For further information contact . . ." (see Sec. V.G).

H. Nitrogen

Nitrogen is not a toxic gas, most of the air we breath is nitrogen, but it is a killer gas and has probably killed more persons than any other substance, except methyl isocyanate, the gas that leaked at Bhopal in 1984 (and the war gases used in the World War I). It is widely used to remove flammable gases before equipment is opened for maintenance (and to remove the air afterward). Although its use has prevented many fires and explosions, a high price has been paid. In one group of chemical companies, in the period 1960–1978, 13 employees were killed by fire or explosion, 13 by toxic or corrosive chemicals, and 7 by nitrogen. Sometimes nitrogen has been confused with compressed air, sometimes it was not known to be present, and sometimes people did not know it was hazardous. The name "inert gas," often used to describe nitrogen (and carbon dioxide and argon), is misleading, as it suggests a harmless gas. Nitrogen is not harmless. An atmosphere of nitrogen can produce unconsciousness without warning in 20 s, and death 3 or 4 min later. The German for nitrogen, *stickstoff* (suffocating substance) is more descriptive. I suggest we refer to nitrogen as *choking* gas, rather than *inert* gas.

Similarly, oxygen and water are not toxic, but have killed more persons than most obviously harmful materials and should be treated with great respect. Hot condensate has killed and injured persons who did not realize it was boiling water.

The word "empty" can be as misleading as "inert." Drums that have contained hazardous chemicals are not safe when empty. They may contain an explosive vapor—air mixture or sufficient toxic vapor to cause harm. New drums have been contaminated with the solvent that the manufacturer used for cleaning them.

III. OPERATION OF A PERMIT-TO-WORK SYSTEM

It is not essential to impose a common system on all the plants in a company. If the head office tries to do so, the staff may resent it. It is sufficient to lay down principles and guidelines, and to let the staff of each plant write detailed instructions to give them effect. They will be more committed and will be able to allow for local problems, customs, and laws. Persons become familiar with procedures and forms, and change makes errors more likely; procedures should not be changed unless they are unsatisfactory.

If two or more plants are near each other and share the same maintenance organization, then the procedures and forms should be the same, or the maintenance workers will become confused and will make errors.

The instructions should cover such matters as who is authorized to issue and accept permits-to-work, the training they should receive (not forgetting deputies), the period of time for which permits are valid, and the number of copies to be made out (usually two; the top copy is removed by the person who accepts the permit and returned when it is signed off). People authorized to issue entry permits should be appointed by name, after they have shown that they understand their responsibilities.

Before signing a permit, those who issue them should always personally check that the isolation and identification of the job are satisfactory. By signing the permit, they accept responsibility, legally and morally; therefore, they should never allow others to check the plant on their behalf. They should inspect the job again when work is complete (see Sec. V.I, item 1).

In some companies, the maintenance workers have to check the isolations before they start work. In my view, this dilutes the responsibility of the person who issues the permit. If he (or she) knows someone will check his (or her) work, he (or she) may work less reliably; meanwhile, the maintenance worker, having never found anything wrong, may have given up checking. Nevertheless, maintenance workers should be *encouraged* to check. Their lives are at risk and, if I were a maintenance worker, I would always check (see Sec. V.A, item 4). In the incidents described in Sec. V, most of the persons killed or injured were maintenance workers.

Unless a job is routine, the persons issuing and accepting permits should discuss the job together, preferably on the job. Permits should be handed over (and returned when the job is complete) person-to-person. They should not be left on the table for persons to sign when they come in (see Sec. V.I, item 1). A good practice is to display permits-to-work on the job (in a plastic bag) so that everyone can see them.

Most maintenance is carried out during the day, even though the plant is operated in shifts. The process foremen and lead operators should not change shift at the same time as the maintenance team starts work, or they will be too busy finding out the state of the plant to be able to give the maintenance operations the attention they deserve.

Permits should not be issued until the maintenance team is ready to begin work. It is bad practice to issue large numbers of permits, on the chance that anyone has some unexpected free time.

In general, avoid the use of long lists of protective clothing or precautions that merely have to be checked off. It is easy to check off too much. Similarly, do not use rubber stamps. Instead, write in details of the protective clothing and other precautions required (see Sec. V.I, item 2). Protective clothing is discussed in detail in Chapter 4.

If there is a change in the work to be done the permit should be returned and a new one issued.

Sometimes exceptions are necessary. There should be a procedure for authorizing them (at an agreed senior level) and recording them.

The plant should always be put back as it was, unless a modification has been authorized. Maintenance workers should be encouraged to *suggest* modifications, but should not make them, however trivial they may seem, unless they have been authorized. Accidents have occurred because maintenance teams decided that, while they were repairing the plant, they would make a few obvious minor improvements (see Sec. V.I, item 3).

All procedures are subject to a form of corrosion more rapid than that which affects the steelwork and can vanish without trace once supervisors and managers lose interest. Permit procedures lapse more quickly than most, as they are time-consuming, and foremen and operators do not always see the need for them. Their job, they feel, is to run the plant, not fill in forms; therefore, good training is vital. It should explain the need for the system as well as its method of operation.

All those involved in issuing or accepting permits, or in preparing equipment for maintenance, should be trained in the operation of the permit system before they take on their responsibilities, and at intervals thereafter. Accidents caused by poor permit-to-work systems (or by a failure to follow good systems) should be described or, better discussed, those present saying what *they think* should be done to prevent them happening again (The UK Institution of Chemical Engineers can supply suitable slides and notes, but local incidents have more impact) [4]. The American Institute of Chemical Engineers holds a course in which accidents, including some due to poor preparation for maintenance, are discussed in this way [5]. These discussions are time-consuming, but worthwhile, as far more is remembered than if the same information had been included in a lecture.

All production supervisors and superintendents and maintenance engineers should inspect several permits-to-work every week, report the results to their superiors, and comment on any problems found (for example, things not understood or difficult to carry out). They should inspect the job as well as the paperwork to see that the precautions requested on the permit are actually being taken. Safety advisers and managers should carry out occasional checks, and plant audits should include a survey of permit-to-work procedures and practice.

No one should turn a blind eye if he (or she) sees that the correct procedure is not being followed. A friendly word about missing protective clothing is more effective than punishment or reprimand after an accident. A supervisor who turns a blind eye is, in effect, telling someone that the correct procedure is unimportant. The first step down the road to a serious accident occurs when a supervisor turns a blind eye to a missing blind.

If the permit system is modified, the new system should not be introduced by decree. It should be explained to those who will have to operate it, the deficiencies in the old system should be described, and those present should be encouraged to discuss any problems. The authors may discover that their proposals have unforeseen snags.

Procedures should be explained to contractors—it is not sufficient to give the contractor's foreman a copy of the instructions—and they should be monitored closely.

Instructions should be written in simple language. Lengthy instructions in complex legalistic language are often written to try to cover every possible eventuality and leave no loopholes. The result may be an instruction that is incomprehensible or so long that people put it aside to read when they have time and thus never read it. Instructions should be written to help the reader, not to protect the writer.

In some countries, certain procedures are required by law, particularly for entry to vessels, and these should be included in the permit procedure.

IV. A PERSONAL NOTE

The recommendations outlined in the foregoing go farther than some companies consider necessary. For example, they may put "Do not operate" notices on valves instead of locks, they may allow entry to vessels containing irrespirable atmospheres or, to save time, they may turn a blind eye to occasional shortcuts. Nevertheless, bitter experience has convinced me that the recommendations are necessary.

In 1968, following 16 years experience in production, I was transferred to a new position in safety. It was an unusual move at the time for someone with my experience, but three serious fires in 3 years, in which five persons had died, convinced the senior management that more resources should be devoted to safety and that it could no longer be left to retired army officers and elderly foremen. Two of the accidents were due to poor preparation for maintenance: one of them to a failure to isolate adequately, the other to overloading a process foreman, who was busy operating the plant and did not give adequate supervision to a contractor. Since then, I have read hundreds of reports on other accidents resulting from these causes and from all of the others against which I have recommended precautions. Some were serious; others were near misses.

When I retired from industry, one of my first tasks was to sort the many accident reports that I had collected. The thickest folder, by far, was one labeled "Preparation for maintenance." Some of the incidents from that folder, and some more recent ones, are described in the next section. Others are described in Refs. 6 and 7.

If you decide that my recommendations are not the right ones for your organization, please do not ignore the accidents described. Check that your procedures will prevent them, or they will happen again.

V. SOME ACCIDENTS THAT HAVE OCCURRED BECAUSE THE PERMIT-TO-WORK SYSTEM WAS POOR OR WAS NOT FOLLOWED

The incidents are described in the same order as in Sec. II.

A. Isolation

1. While a mechanic was working on an empty steam drum, he was affected by fumes. One of the lines from the drum supplied live steam to a process vessel that was in use at a gauge pressure of 2 bar (30 psi). A valve in the connecting line was closed, but leaking and fumes came back from the vessel into the steam drum (Fig. 5).

The company normally used blinds to isolate equipment that was being maintained, but they did not fit them on this occasion, as the material in the equipment was "only" steam.

2. A liquid ammonia pump was disconnected at points A, B, and C (Fig. 6). The maintenance team then left the job. While they were away a process operator arrived to start up the next pump. In error he opened the suction valve D on the pump that was under repair and was killed by the escaping ammonia.

The accident would not have occurred if the isolation valves had been locked closed or if the open ends had been blanked. Open ends should be blanked as soon as lines have been disconnected.

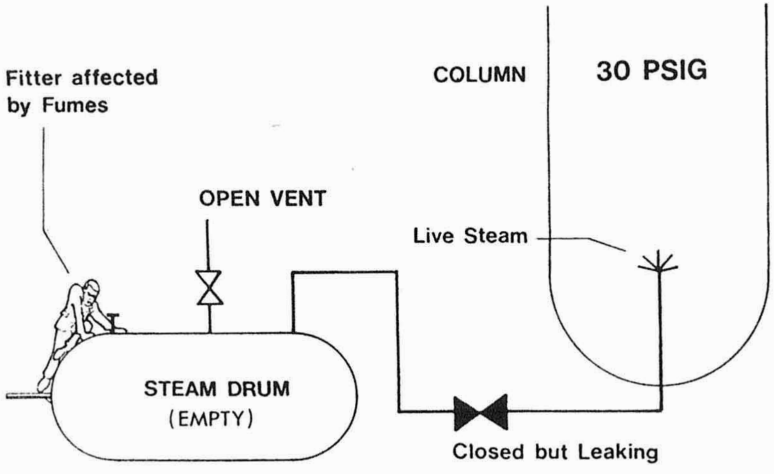

Figure 5 Steam system contaminated by process materials.

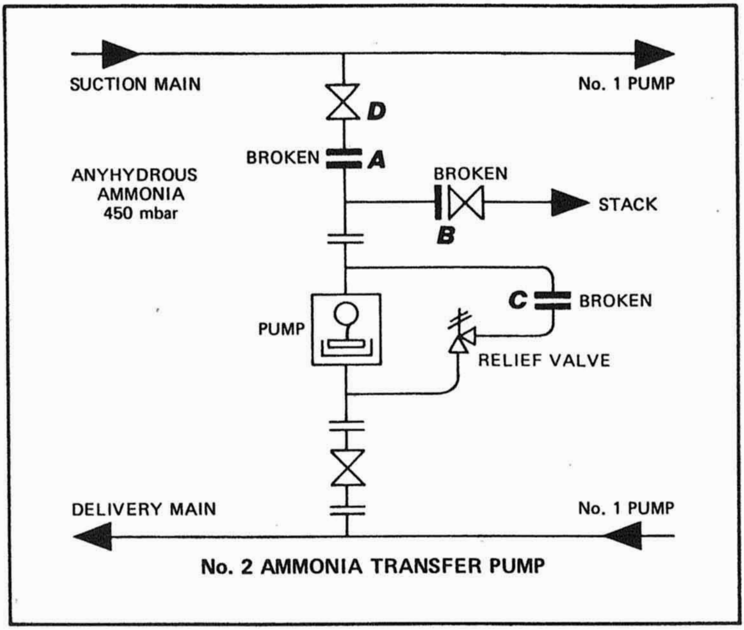

Figure 6 A man was killed when valve D was opened in error.

3. A mechanic was working on a pipeline that had been blinded when corrosive liquids came out. Fortunately, he escaped injury. A branch that was covered by insulation had been overlooked.
4. A pump needed repair. The job was expected to be a quick one, so it was decided not to blind it, but to rely on valve isolations. The suction and delivery valves were closed and locked off, and the drain valve was opened but not locked. Twenty minutes later the mechanics started work. They unbolted the pump cover and were sprayed with liquid. Other men, working nearby, helped them under a shower and their injuries were slight. Someone had closed the drain valve (or perhaps forgot to open it) and the suction or delivery valve was leaking.

The mechanics did not check the isolations. They should be encouraged to do so. Nevertheless, the primary responsibility is that of the operations team who prepare the equipment. See Sec. III.

Section II.A recommended that equipment should be blinded unless the job to be done is so quick that fitting blinds would take as long and be as hazardous as the main job. In this case, blinding would have taken as long as the main job, but would not have been as hazardous.

5. A permit was issued to turn a figure-eight blind on the steam inlet line to a vessel that contained hydrogen sulfide. The only isolation between the blind and the vessel was a check valve (Fig. 7). This valve was leaking, and although the gauge pressure in the vessel was only 0.1 bar (1.5 psi), the mechanic collapsed after breaking the joint. A stand-by man went to his assistance and pulled him out of the way, but then also collapsed. Fortunately, a third man arrived on the scene and rescued the stand-by man.

The permit advised that breathing apparatus should be worn when necessary, but the mechanic decided not to wear it. The stand-by man had a canister mask with him, but did not put it on when he went to rescue the mechanic. Canister masks are not suitable for use with high concentrations of hydrogen sulfide or for rescue operations of any type. Self-contained breathing apparatus should be provided [8].

Check valves should not be used for isolation, even to fit a blind, unless tests show that they are not leaking. A second isolation valve should have been provided between the blinding position and the vessel.

In one case, when tests could not be carried out to prove that a check valve was holding, as there were no sample points, the check valve was radiographed.

6. A team of four men, wearing breathing apparatus, removed a level gauge from a distillation column, which contained 600 ppm hydrogen sulfide. They left the isolation valves closed, *but not blanked,* and removed their breathing apparatus. One of the men went down a ladder onto the next platform, and then collapsed. One of the valves was leaking slightly, and as he went down the ladder his face passed near the valve.

7. A mechanic was overcome while *removing* a blind from a vessel that had been open for entry. While the entry was in progress a vent on the vessel was

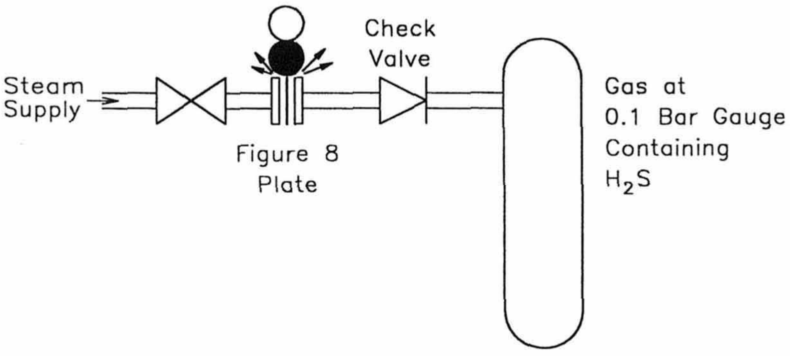

Figure 7 Check valves should not be used for isolation unless tests show they are not leaking.

open, and this allowed hydrogen sulfide, given off by sludge in the vessel, to disperse. When the entry was finished, the vent was closed and, by the next day, the concentration of hydrogen sulfide had risen to a dangerous level. Similarly, surface coatings may give off solvent vapor for many hours after they have been applied and produce hazardous concentrations inside vessels.

This incident and the previous two show that refinery workers often underestimate the toxicity of hydrogen sulfide. Portable detector alarms should be used when maintenance work is carried out on equipment containing toxic gases [9]. (see also Sec. V.B, item 5).

8. Two pumps (numbers 1 and 2) were being repaired by two mechanics. When the work on no. 1 was complete, the mechanic decided to try it out. In error he pressed the start button for no. 2 pump. One of the men working on it was killed and the other injured. The pumps had not been defused or locked out, the label on the starter of no. 1 pump was covered in tar and the label on the starter of no. 2 was missing.

This accident did not occur in a backstreet company. It occurred in a plant belonging to a major international company that normally prided itself on high standards of safety. The repairs were behind schedule and workers were being pressed to complete them as soon as possible. They were not actually told to short-cut the usual safety procedures, but may have received the impression that they could do so from a lot of talk about the importance of output, but no mention that it should not be obtained at the expense of safety. What you do not say is as important as what you do say.

Electrical isolation is important in the home as well as at work. A French housewife was taken to hospital with her tongue caught in an electric food beater. She was licking cream off the blades when she accidentally switched on the machine [10].

B. Freeing from Hazardous Materials

Many incidents have occurred because liquid (or gas) under pressure was trapped behind chokes.

1. A mechanic was asked to clear a choke on an all-welded line. He removed the bonnet and inside of a valve and started to chip away at the choke inside. A jet of corrosive liquid under pressure came out from behind the solid and hit him in the face. It pushed his goggles aside and some of the liquid entered his eye.

2. A mechanic was asked to dismantle an old acid line. He broke the first joint without difficulty. When he broke the second joint, acid came out under pressure and splashed him and his assistant. Acid had attacked the pipe, building up gas pressures in some places and blocking it with sludge in others.

3. In another similar case, a mechanic broke a joint carefully, but only a trickle of acid came out. He removed all but one of the bolts and pulled the flanges apart; no more acid leaked out. He removed the last bolt and pulled the joint wide apart and a sudden burst of pressure blew acid onto his face.

These three incidents show that goggles are not sufficient protection when breaking lines that may contain corrosive or toxic liquids under pressure. Protective hoods should be worn.

4. An electrician was fixing a new light to the outside wall of a building when he was affected by toxic fumes coming out of a ventilation duct 2 ft away. When the permit was issued the electrical hazards and the hazards of working on ladders were considered, but no one realized that fumes might come out of the duct. Yet the duct had been installed to get rid of fumes.

When completing permits-to-work we should consider the hazards produced by surrounding equipment; for example, leaks from other equipment, as well as the hazards of the equipment under maintenance (see Sec. II.B).

5. Some refinery equipment was shut down for maintenance and swept out with nitrogen. A small flow of nitrogen was kept in operation to prevent backflow from the flare system (through leaking valves), but no tests were carried out. After a mechanic had changed a valve he collapsed, fell, and fractured his skull. He had been wearing a mask, but it was not fitted correctly and he was affected by hydrogen sulfide that had not been completely removed from the equipment [11] (see also foregoing Sec. V.A, item 7).

C. Identification

1. Water was dripping from a joint on an overhead pipeline. Scaffolding was erected to provide access for repair, but to avoid climbing onto the scaffolding the process foreman pointed out the leak to a mechanic and asked him to remake the leaking joint on the water line, which he had isolated. Unfortunately, the water was not dripping from the water line, but from a carbon monoxide line, and when the mechanic broke the joint, he collapsed. Access was poor and rescue was difficult.

If the foreman had fixed a numbered label on the line, as recommended in Sec. II.C, he would have realized that the leak was coming from the carbon monoxide line.

2. A mechanic was given a permit to locate and clear a choke on a caustic line (Fig. 8). The valves at each end of the line were closed. The mechanic started by breaking the joint shown in Fig. 8. Soon afterward product, a corrosive and toxic liquid, was moved down the product line into the tank and sprayed out of the broken joint. Fortunately, the mechanic had left the job.

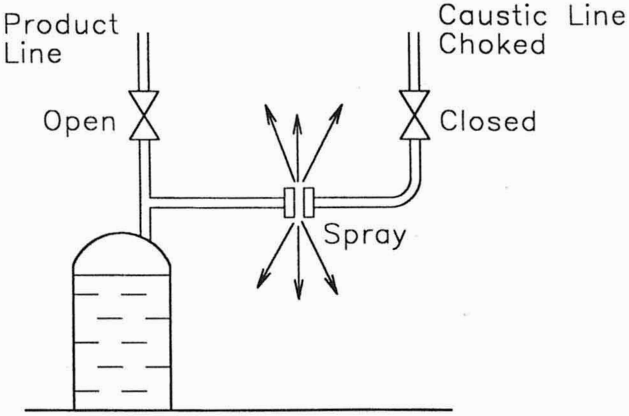

Figure 8 The wrong joint was broken.

The process foreman blamed the mechanic for breaking a joint on the "tank header" (so-called because it was accessible from the roof of the tank) but the mechanic looked on this short section of line as part of the caustic line. His instructions were ambiguous. The process foreman should have labeled each joint that the mechanic was free to break (or at least the joints at each end of this section of pipe).

3. A mechanic was seriously injured by a corrosive chemical when it came out, under pressure, from a pump on which he was working. Blinds had been fitted, but in the wrong positions. The permit did not say precisely where the blinds should be fitted, and the process foreman did not check that they had been fitted correctly.

4. To prepare a vessel for entry, a mechanic inserted six blinds. When entry was complete he removed six blinds. Unfortunately, one of the blinds he removed was a permanent one kept in position to prevent contamination. Each blind position should have been identified by a numbered label.

5. Two pumps, side-by-side, were labelled

No. 1 Fridge Water Pump	No. 1 Chilled Water Pump

Not surprisingly, a mechanic dismantled the wrong pump.

6. Wet waste chalk was discharged down a row of four chutes into rail vehicles. The plant operators numbered the chutes from one end, and the railway workers numbered them from the other. As long as four rail vehicles were in

position, this did not matter, but one day, fewer rail vehicles were lined up, and an operator discharged wet chalk on to a steam locomotive. It filled the smokebox, and flames and smoke were blown out into the cab [12].

D. Hot Work

This is not discussed further, as this book is primarily concerned with toxic materials. Accidents that have occurred during hot work are described in Refs. 6 and 7.

E. Entry to Vessels and Other Confined Spaces

1. A man stood on a ladder above an open drain manhole while he put on his lifeline and breathing apparatus, ready to go down into the drain (Fig. 9). He was overcome by toxic fumes rising out of the drain and fell into it. His body was recovered from the outfall a mile away.

Similar incidents have occurred with nitrogen (see Sec. V.H, item 2).

2. Incidents have occurred because vessels were not freed from hazardous materials before entry. For example, toxic liquids have been trapped inside the bearings of stirrers and have then leaked out, deposits have given off vapor when disturbed, and rust formation has used up much of the oxygen inside a vessel, producing an irrespirable atmosphere. This can occur very rapidly, within a day, if the atmosphere is hot and certain chemicals, such as magnesium chloride, are present [13].

3. Incidents have occurred because toxic materials were deliberately introduced into vessels, for example, for dye-penetrant testing or surface coating. If breathing apparatus is not worn, the quantity introduced should not be sufficient to bring the concentration above the TLV, after allowing for ventilation (see also Sec. V.A, item 7).

4. Incidents have occurred because vessels were not isolated from all sources of danger. For example, blinds have been missed, sometimes accidentally, sometimes deliberately as "it was only a 5-min. job," permanent blinds have had corrosion holes in them or gas has entered from vent or drain lines shared with another vessel. Before entry is allowed, vent or drain lines should be disconnected or blinded, unless very short and free from places in which liquid can collect. On other occasions electricity has not been disconnected and stirrers have been started up in error while someone was inside a vessel.

5. Incidents have occurred because men, particularly contractors who did not understand the procedure, entered vessels on which entry had not been authorized. For example, a contractor's foreman entered a tank to prepare an estimate for

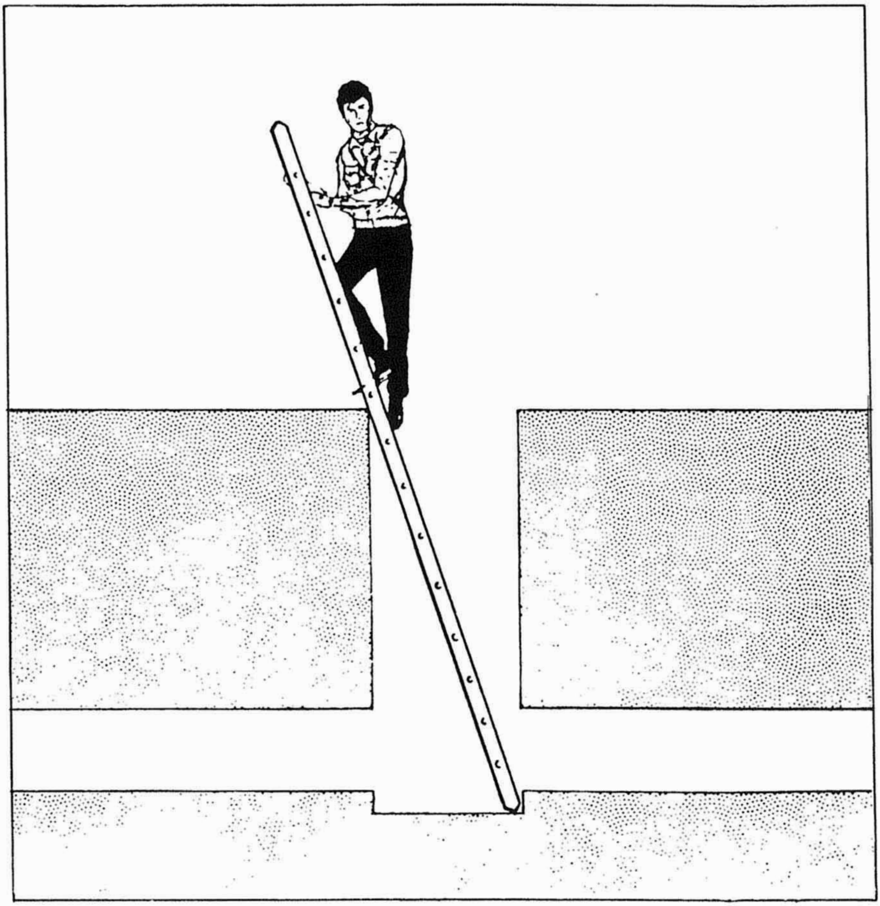

Figure 9 Fumes arising from a drain manhole killed a man who was getting ready to descend the ladder.

cleaning it. He thought an entry permit was needed only when work was in progress. As stated in Sec. II.E, barriers should be placed across open manholes if entry has not been authorized.

6. The operators of tank trucks and ships have often allowed entry for cleaning or inspection using lower standards than recommended here. If a manufacturer wishes to inspect a tank truck or ship's tank before loading product, he should not allow his employees to enter until he is satisfied that adequate precautions have been taken.

F. Maintenance Operations Carried Out by Operators

1. A suspended catalyst was removed from a process stream (a corrosive liquid) in a pressure filter. The sequence of operations was as follows:

a. Pump a batch through the filter.
b. Blow out the liquid remaining in the filter with steam at a gauge pressure of 2 bar (30 psi).
c. Isolate the steam supply.
d. Vent the filter and check that the pressure gauge reading falls to zero
e. Open the filter for cleaning.

One day the operator, a conscientious man of great experience, forgot to vent the filter and started to open the filter door (about 1 m diameter) before blowing off the pressure. The door blew open with great violence, killing the operator and also spraying him, and another man who happened to be passing, with the corrosive sludge that had been left behind in the filter.

It is not helpful to say that the accident was due to human error. From time to time everyone makes slips or has lapses of attention (the accident occurred an hour before the operator started his annual vacation, and his mind may not have been fully on the job); hence, plants should be designed so that errors do not have serious results [3].

Section II.F describes the actions needed to prevent similar accidents occurring.

G. Other Features of a Permit-to-Work System

1. A large shell and tube heat exchanger (2.4 m long by 2.6 m diameter) was sent to another company for retubing. The shell had contained steam and the tubes had contained a liquid that was likely to form chokes. There were 200 tubes, 2-1/2 in. (65-mm) in diameter, of which 80 were plugged. The free tubes had been cleaned with high-pressure water and the plugged tubes had been opened up by drilling 3/8-in. (10-mm) holes in them to relieve any trapped pressure, but the holes were too small to allow the tubes to be cleaned. A note was attached to the shell to say that burning and welding were allowed, but only on the shell.

The contractor removed most of the tubes and then decided to let his workers enter the shell to grind out the plugged tubes. He telephoned the plant and asked if it would be safe to let workers enter the shell. He did not say why he wanted them to do so.

The engineer who answered the telephone said that the shell was clean and so it would be safe to enter it. He did not ask why anyone wanted to do so.

Two men entered the shell and started grinding. They were affected by fumes, and the job was left until the next day. Another three men then started grinding and were so badly affected by the fumes that they were hospitalized.

The note attached to the heat exchanger should have given much more information. It should have said that the plugged tubes contained a solid that produced toxic fumes when heated. Better still, the plugged tubes should have been opened up and cleaned before the exchanger left the plant (see Sec. II.G).

Before plugging tubes we should always ask how the plugs will be removed. Leave your knowledge to your successors, not your problems.

2. When a valve was dismantled in a workshop, some liquid ran out, and the smell was so bad that the workshop was evacuated. There was a warning label on the valve, but much of the equipment that arrived for overhaul or repair had similar warning labels attached, even though it was clean, and so after a time, the warnings were ignored.

If we "cry wolf" when no wolves are present, no one will pay attention when they are present. The labels on equipment sent outside the plant should distinguish between routine warnings ("The equipment has been cleaned, but some hazardous material may remain") and equipment that has not been cleaned. This should be sent outside the plant only in exceptional circumstances (see also Sec. V.I, item 2).

H. Nitrogen

1. On several occasions nitrogen has been used instead of air to freshen the atmosphere in vessels in which persons were working. In one case, it was used to power a compressed-air-driven light.

Different connections are often used for compressed air and nitrogen, but confusion has still occurred when the hoses were not long enough and workers used makeshift couplings.

2. People have been affected by nitrogen because they did not realize it was hazardous (see Sec. II.H). For example, someone decided to recover a rope that was half inside a vessel and was caught on something inside. While kneeling down near the entrance, he was overcome and collapsed. Fortunately, he was rescued by other workers who were working nearby.

3. Other incidents have occurred because persons did not know that nitrogen was present. For example, it has been connected to new vessels by construction teams. Such connections should be made by plant mechanics, not by construction contractors.

Reference 14 gives more details of these and other incidents.

I. Operation of a Permit-to-Work System

1. A night shift lead operator issued a permit to remove a pump for overhaul. It was defused and removed, and the open ends were blanked. The maintenance foreman then signed the permit to show that the job—removing the pump—was complete and left it on the lead operator's desk. The morning shift lead operator glanced at the permit, assumed that the overhaul was complete and asked the electrician to replace the fuses. By the time he had done so the afternoon shift had come on duty. The afternoon shift lead operator went to check the pump and found it was not there.

Permits should be issued and returned person-to-person, not left for someone to sign later, and before accepting back a permit the person who issued it (or his successor on another shift) should check that the job is really complete and that the maintenance team has done the job that he or she wanted them to do.

2. A mechanic was asked to change a valve on an acid line. The permit stated that gloves and goggles should be worn. He did not wear them and, although the line had been drained, he was splashed in the eye by a drop of liquid that had remained in the line.

At first sight it seems that the injury was entirely due to the failure of the injured man to follow clearly written instructions. However, further investigation showed that the process team wrote "Gloves and goggles to be worn" on every permit, even for jobs on low-pressure water lines in safe areas. They probably did this so that they could not be blamed for asking for too little protective clothing, but they did not enforce the instruction, which they wrote to protect themselves, rather than help others. The maintenance workers realized that the instruction was usually unnecessary, ignored it, and continued to do so when it was really necessary.

We should ask only for the precautions that are necessary and then enforce them (see also Sec. V.G, item 2).

3. A plant used carbon monoxide as a raw material, and so breathing apparatus was often used during maintenance work. A special branch was taken off the top of the compressed air main and used to feed a network of lines used only for breathing apparatus. A catchpot fitted with an automatic drain (Fig. 10) removed any water that was carried over with the air. The system operated without problems for 30 years, until it had to be shut down for renewal of corroded pipework. The maintenance team then located the breathing air branch on the bottom of the main. The catchpot filled with water faster than the drain could empty it and a man who was working inside a vessel and wearing breathing apparatus found that his face mask was filling with water. Fortunately, the atmo-

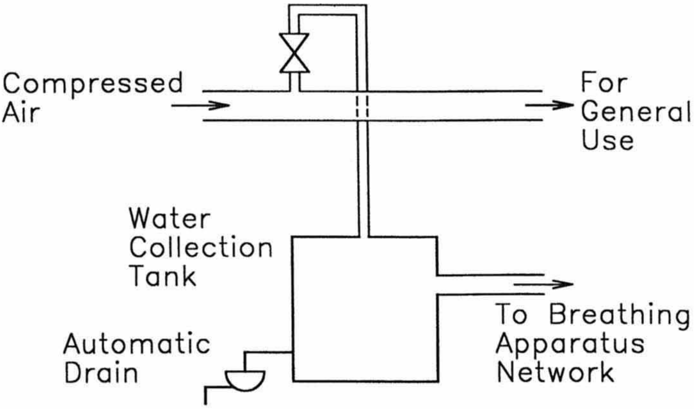

Figure 10 Original design of a compressed air system. After maintenance the breathing apparatus branch came off the bottom of the main.

sphere in the vessel was not harmful to breath for a few minutes, and he was able to remove his mask and scramble out, assisted by the standby man.

Perhaps the maintenance team thought the catchpot would collect water more effectively if it was connected to the bottom of the main. Perhaps they wanted to shorten the pipe run. Maintenance teams should suggest improvements, but if they have not been authorized, they should put the plant back as it was.

VI. MAINTENANCE QUALITY

This chapter has been mainly concerned with accidents caused by poor permit-to-work systems or failures to follow the systems, as they are by far the most common causes of accidents involving maintenance. However, accidents have also occurred because maintenance workers did not understand how things worked, because workmanship was poor, or because specialist skills were lost with the passage of time [15,16].

Canned-pumps are often used for pumping toxic liquids. If there is a leak in the can, process liquid under pressure can find its way into parts of the pump that do not normally contain liquid. Men have been injured because they did not realize this and dismantled a pump before relieving the pressure.

Sometimes workmanship is poor because the mechanics lack the necessary skill, but at other times, they may not realize the importance of fully using their skills. Construction workers and other temporary workers, in particular, may not know the nature of the materials in the plant and the effects that leaks and other failures can have on other persons. Training courses should explain why a job should be done a certain way, as well as how it is done.

As with everything else, the standard of maintenance work should be checked from time to time, and supervisors and manager should keep their eyes open when they tour the plant.

On occasions, there have been no written instructions for the maintenance of specialized equipment, and tolerances were not specified (or the original drawings were no longer available), but skilled craftsmen with long experience knew exactly what to do. When they retired, their successors were unsure. For example, high-pressure valves of an uncommon design were used on a plant that handled carbon monoxide. After a gasket had blown out of a joint, it was found that the clearances were too large and that the men who had maintained the valves for decades had recently retired [16].

ACKNOWLEDGMENTS

Thanks are due to the many colleagues who have supplied information for this chapter and for the companies concerned for allowing me to describe their accidents and procedures.

REFERENCES

1. Health and Safety Executive, *Dangerous Maintenance*, Her Majesty's Stationery Office, London, 2, (1987).
2. T. A. Kletz, *Learning from Accidents,* 2nd edition. Butterworths, Oxford, 1994, Chap. 16.
3. T. A. Kletz, *An Engineers View of Human Error*, 2nd ed., Institution of Chemical Engineers, Rugby, UK, 1991, especially Sec. 2.2.
4. Hazard Workshop Modules (various dates), Institution of Chemical Engineers, Rugby, UK.
5. Chemical Plant Accidents, Course held by the American Institute of Chemical Engineers.
6. T. A. Kletz, Hazards in chemical system maintenance: Permits, *Safety and Accident Prevention in Chemical Operations*. 2nd ed. (H. H. Fawcett and W. S. Wood, eds.), John Wiley & Sons, New York, 1982, Chap. 36.
7. T. A. Kletz, *What Went Wrong?—Case Histories of Process Plant Disasters*, 3rd ed., Gulf Publishing, Houston, TX, 1994, Chap. 1.
8. IP safety news, *Petroleum Rev.*, July: 25 (1989).
9. IP safety news, *Petroleum Rev.*, Oct: 34 (1983).
10. *Daily Telegraph*, June 22 (1976).
11. IP safety news, *Petroleum Rev.*, July: 24 (1981).
12. P. W. B. Semmens, *Railway Magazine* 134 (1043): 163 (1988).
13. R. G. Melchior, *Am. Ind. Hyg. Assoc. J.* 48:608 (1987).

14. T. A. Kletz, *What Went Wrong? Case Histories of Process Plant Disasters*, 3rd ed., Gulf Publishing, Houston, TX, 1994, Sec. 12.3 and 5.4.2.
15. T. A. Kletz, *What Went Wrong? Case Histories of Process Plant Disasters*, 3rd ed., Gulf Publishing, Houston, TX, 1994, Sec. 1.5.
16. T. A. Kletz, *Lessons from Disaster—How Organizations Have No Memory and Accidents Recur*, Institution of Chemical Engineers, Rugby, UK, 1993, especially Chap. 4.

12

Mechanical Integrity

Roy E. Sanders
PPG Industries, Lake Charles, Louisiana

I. WHAT DOES "MECHANICAL INTEGRITY" MEAN?

Mechanical integrity is a new phrase gaining widespread use in the chemical industries. Simply put, *mechanical integrity* means containing all the hazardous chemicals within the equipment and piping systems. This is achieved by designing to meet or exceed standards, by building with proper construction techniques, and afterward, by implementing effective inspection and testing programs.

II. A REGULATORY VIEW OF MECHANICAL INTEGRITY

The term mechanical integrity became popular as a result of its use by the U. S. Occupational Safety and Health Administration (OSHA), in the 1992 standard: *Process Safety Management of Highly Hazardous Chemicals* [1]. The law, OSHA 1910.119, provides requirements for preventing or minimizing the consequences of catastrophic releases of toxic, reactive, flammable, or explosive chemicals. The regulation, now in effect, requires inspection and testing of equipment using written procedures and trained employees.

Section VI through the remainder of this chapter is taken from *Management of Change: Learning from Case Histories*, Chapter 8 by Roy E. Sanders, Butterworth-Heinemann, Oxford, England, 1993. Much of the material is copied verbatim with the kind permission of the Butterworth-Heinemann Publishing Company [12].

The federal standard regulates facilities that handle nearly 140 specifically listed, highly hazardous chemicals and certain processes involving flammable liquids or gases in excess of 10,000 lb. Although the law may not cover some highly toxic materials, it does present a good benchmark for examining programs to ensure containment. The techniques discussed in this chapter are not new; yet, they are not yet universally used.

An advance copy of the OSHA compliance directive [2] identifies that the intent of a mechanical integrity program

> . . . is to assure that equipment used to process, store or handle highly hazardous chemicals is designed, constructed, installed and maintained to minimize the risk of releases of such chemicals. This requires that a mechanical integrity program be in place to assure the continued integrity of process equipment. The elements of a mechanical integrity program include the identification and categorization of equipment and instrumentation, development of written maintenance procedures, training for process maintenance activities, inspection and testing, correction of deficiencies in equipment that are outside acceptable limits defined by the process safety information, and development of a quality assurance program.

Design, construction, and installation of equipment is beyond the scope of this chapter. See previous Chapters 5 and 6 that address most of proper design and construction methods and practices. However, if there are still questions, consider reviewing the American Institute of Chemical Engineers (AIChE) 1988 publication, *Guidelines for Safe Storage and Handling of High Toxic Hazard Materials* [3].

"Design of Storage and Piping Systems," Chapter 4, of the *Guidelines for Safe Storage and Handling of High Toxic Hazard Materials* discusses vessel design, low-pressure tank guidelines, piping design and other pertinent design considerations. It provides six pages of references including the American Society of Mechanical Engineers (ASME) codes; American Petroleum Institute (API) publications covering practices, standards, and guides; selected American National Standards Institute (ANSI) standards; selected National Fire Protection Association (NFPA) standards; and other sources of information. The list is excellent.

The OSHA 1910.119 law specifies a mechanical integrity program that encompasses regular inspection and testing of the following equipment: piping, pressure vessels and storage tanks, relief and vent system devices, emergency shutdown systems, and various interlocks, alarms, sensors, and pumps. No doubt, the standard was intended to cover all other equipment that handles highly hazardous materials, such as filters, compressors, heat exchangers, scrubbers, flare stacks, incinerators, and other components, even if not specifically mentioned.

The requirement for inspection and testing is the heart of the mechanical integrity standard. Any inspection and testing procedures used must follow the applicable manufacturer's recommendations or generally accepted good-engineering practices, guides, codes, as well as internal standards. The standard also specifies documentation of each inspection and test performed.

Useful references include those published by organizations such as the American Society of Mechanical Engineers, the American Petroleum Institute, the American Institute of Chemical Engineers, the American National Standards Institute, the American Society for Testing and Materials (ASTM), the Chemical Manufacturers Association (CMA), the Chlorine Institute, the Compressed Gas Association (CGA), the National Fire Protection Association, and publications from various property insurance associations.

To quote directly from Appendix C of the OSHA law [4]:

> The first step of an effective mechanical integrity program is to compile and categorize a list of process equipment and instrumentation for inclusion in the program. This list would include pressure vessels, storage tanks, process piping, relief and vent systems, fire protection system components, emergency shutdown systems and alarms and interlocks and pumps. For the categorization of instrumentation and listed equipment the employer would prioritize which pieces of equipment require closer scrutiny than others. Meantime failure of various instrumentation and equipment parts would be known from the manufacturers' data or the employer's experience with the parts, which would then influence the inspection and testing frequency and associated procedures. Also, applicable codes and standards such as the National Board Inspection Code, or those from the American Society for Testing and Materials, American Petroleum Institute, National Fire Protection Association, American National Standards Institute, American Society of Mechanical Engineers, and other groups, provide information to help establish an effective testing and inspection frequency, as well as appropriate methodologies.

The OSHA law, a performance-oriented standard, allows employees to determine testing criteria, and to set criteria to judge the acceptance or failure of test results. If a test detects a potentially hazardous condition, prompt corrective action is required.

III. AN INDUSTRY VIEW OF MECHANICAL INTEGRITY

Mr. Ken Robertson, President of Exxon Chemical Americas, discussed "protective programs" or "mechanical integrity" programs in a keynote address at the Chemical Manufacturer Association's Plant Inspection and Maintenance Forum, in 1990. Indicating that public expectations are increasing, Mr. Robertson noted there is less tolerance for oil and chemical spills as well as tragic plant safety incidents [5].

The Exxon president reviewed some of his company's process safety management practices relating to maintenance:

> First, safety critical systems must be reliable. These systems control releases in the event of accidents. It's necessary to have a critical analyzer, instrument and electrical system test program. This should consist of preventive maintenance and alarm and trip device testing for panel alarms, emergency isolation valves and other critical components.
>
> Also, procedures must be in place to control defeating safety critical systems. Before taking these systems out of service for any length of time, there must be proper authority, communication and detailed contingency planning.
>
> Regular, comprehensive inspections to ensure the safe condition of site equipment is another important consideration. There must be clear lines of responsibility for inspection and maintenance of crucial containment systems. A formal system must be in place for documenting recommendations and communicating them clearly and quickly to the appropriate managers in the organization.
>
> We're doing away with our traditional maintenance mindset of using heroic measures to fix something . . . our approach is to take ownership, to use predictive tools to get ahead of problems . . . [5].

In the past, some managers may have given mixed signals by praising actions taken to keep production units on-stream in the face of critical alarms being activated. All supervisors and managers must be careful not to praise actions that allow production to continue while in violation of recognized safe procedures.

IV. CLASSIFICATION OF EQUIPMENT BY HAZARD POTENTIAL

Chemical plant equipment, including tanks, pressure vessels, piping, rotating equipment, vent systems, and safety instrumentation, should be identified and categorized into different degrees of hazard potential. Classification systems could be complex or simple. A complex system could be a matrix of increasing severity ratings on one axis and the frequency of occurrence on the other axis. A simple identification system could consist of three priorities such as the following:

A. Priority 1

Containment equipment or the critical instruments serving that equipment the failure of which *would* result in uncontrolled releases of dangerous materials, situations resulting in accidental fires or explosions, reportable environmental releases, or major property or production loss.

Tanks, pressure vessels, piping, or rotating equipment containing highly toxic or highly hazardous chemicals are easily identified by experienced operations personnel as priority 1 equipment. These containment systems must be inspected in some effective manner on a priority basis.

Critical instruments assigned a priority 1 include those of which a failure may cause the perils listed in the foregoing, or instruments that fail to inform of upset conditions that may result in perils. The testing of these instrument systems may be mandated by regulatory agencies, in-house technical safety review committees, hazard and operability (HAZOP) studies, or designated as critical by operations supervisors. All of these shutdown systems and alarms must be proof-tested in accordance with a proper schedule [6].

B. Priority 2

Priority 2 includes equipment or the critical instruments serving equipment the failure of which *could* possibly cause, or fail to warn of, upset conditions; uncontrolled releases of dangerous materials; situations that could result in accidental fires and explosions, with minimal off-site problems; serious conditions involving environmental releases, property, or production losses; or other non–life-threatening situations. These particular pieces of equipment, the safety shutdown systems, and the alarms that serve this equipment are given a slightly lower priority. However, they are also proof-tested on a regular schedule, but may have some tolerance in compliance.

A priority 2 list might include equipment that typically does not contain hazardous chemicals, but may, under abnormal conditions, contain such chemicals. It may also include utility systems, such as cooling tower operations, compressed air or refrigeration systems the failure of which could create significant upsets.

C. Priority 3

All other containment equipment or instrumentation serving the operation, the failure of which would *not* create serious conditions involving recordable environmental releases, property or production losses, or injury to personnel fall into the priority 3 category.

These classifications should be considered when defining the level and frequency of inspection and testing. There could also be some tolerance for certain overdue priority 2 tests and inspections.

V. MECHANICAL INTEGRITY PROGRAMS FOR PUMPS AND COMPRESSORS

When handling toxic materials, it is obvious that the reliability of rotating equipment, such as blowers, compressors, and pumps, is of high importance. Priority 1 and priority 2 pieces of equipment should have written procedures covering the inspections and tests required to satisfy good management practices and the requirements of the OSHA law. Mechanics may require specific skill training.

Inspections of rotating equipment could be accomplished by *preventive maintenance programs*, which assure that equipment and machine behavior follow some sort of statistical average, based on weeks of operation or throughput in the process stream.

Preventive maintenance (PM) programs—the planned, periodic inspection of equipment—reduce the occurrence of unexpected problems. Preventive maintenance programs are much more efficient to conduct than the old-fashioned breakdown maintenance programs of previous years, in which failures often occurred at undesirable times, interfered with production, and often proved to be more costly to correct.

The PM programs require the equipment to be shut down at regular intervals and inspected for wear, cleanliness, and conformance with assembly and performance tolerances. The PM programs should detect small flaws before they grow into equipment problems that interfere with operation of the unit. The method can be satisfactory, but can be expensive if no flaws are detected. Despite having a good PM program, an abnormally premature part failure may not be detected before serious damage occurs. In addition, the PM inspection process occasionally results in mistakes during the reassembly process [7].

Successful rotating equipment *predictive maintenance programs* require several elements, including an effective lubrication program with oil analysis to detect residual metal particles, thermography, machine monitoring instrumentation, repair specifications, repair history records, advanced training for mechanics, and the use of data management computers [8].

Early 1980s studies reported predictive maintenance programs were more cost-effective than the preventive maintenance programs. These studies showed that PM programs cost about 11–13 dollars per horsepower of a machine, whereas a predictive maintenance program cost 7–8 dollars per horsepower [9].

Proactive and predictive maintenance programs were discussed in a spring 1992 telephone survey of over 200 individuals from large industrial plants. *Plant Services* magazine published the results in a handbook in October 1992 [10]. This survey established that vibration analysis and oil analysis were the most frequently used monitoring techniques. Thermography was the third most popular approach. Ultrasonics and wear particle analysis (ferrography) were used regularly, although less frequently.

Effective predictive maintenance programs incorporate multiple features; however, the key to rotating equipment predictive maintenance is a comprehensive vibration surveillance and analysis program. A change in a machine's health or operation nearly always causes an easily detectable vibration change long before the machine fails.

All priority 1 and priority 2 sets of rotating equipment should be considered as candidates for a predictive maintenance program. By the OSHA standard, training must be provided to each employee involved in maintaining the ongoing integrity of process equipment. All maintenance activity on priority 1 and priority 2 pumps and compressors should be followed up with written reports of the results of the inspection or test, including the name or serial number of the equipment, the date, the name of the mechanic or inspector, and any deficiencies.

The OSHA enforcement guidelines [2] state that these three questions will be asked:

1. Are inspections and tests performed on each item of process equipment included in the program?
2. Are inspection and test frequencies consistent with the manufacturer's recommendation and good engineering practice? Are inspections and tests performed more frequently if determined necessary by operating experience?
3. Are deficiencies in equipment that are outside limits (as defined in process safety information) corrected before further use or in a safe and timely manner when necessary means are taken to assure safe operation?

Some basics of a *vibration monitoring program* will be presented next. Other important mechanical integrity concerns, such as a manufacturer's recommendations and lubrication programs will not be addressed. A brief review of thermography in maintenance will follow.

A. A Plant Vibration Program Overview

The feature article in the journal *Vibrations* in June 1992 [7] by Hawkins describes a predictive maintenance program covering over 2100 rotating sets of equipment on a 250-acre site at PPG Industries in Lake Charles, Louisiana. This vibration program, which had its start in 1971, is based on the principle that subtle changes in the operating condition of a machine generate distinctive vibration patterns, long before any failures occurs. The PPG equipment sets range in size from small process pumps to large compressors and also include steam turbines and large gas turbine-driven generators rated for loads in excess of 80 MW.

Small process pumps convey a variety of liquids required in processes involving acids, caustics, liquid chlorine, liquid vinyl chloride, and other hazardous fluids. Compressors at this location convey gaseous chlorine, anhydrous hydrogen chloride, refrigerants, and compressed air.

Three well-trained, full-time, energetic analysts compose the surveillance crew of the PPG Industries Vibration Group. Their skills are developed through self-study, peer support, years of experience, and participation in the Vibration Institute. Their program is divided into three basic functions: surveillance, analysis, and correction.

1. Automated Vibration Surveillance

With over 20 years of experience, PPG has tailored its vibration program to be very cost-efficient. The path to making the program efficient included the development of handheld data acquisition modules and several proprietary computer programs. The earlier data acquisition modules allowed technicians to collect unfiltered overall vibration data in a minimal amount of time. But, there was significant work required to collect the detailed analysis data required to provide recommendations for corrective action.

Modern, commercially available, computerized data collectors are user-friendly. A display window on the module describes each piece of equipment on the surveillance route in sequence. It allows the analyst to walk up to operating equipment, which is verbally described on the display, and place a probe on the indicated bearing or other data point (Figs. 1 and 2). When the analyst presses a button, the module records the vibration level and any required analytical data. The data collector automatically identifies troubled sets, based on preset alarm values, and collects spectrum data. Once the data collection is completed on a point, the program automatically advances to prompt data collection at the next point.

Built-in features to the surveillance module include the ability to scroll up and down through the list of equipment sets and the ability for the technician to provide useful comments. Comments can be selected from a preprogramed list, such as needs alignment, base requires anchoring, piping strain, or any short phrase may be entered.

Vibration monitoring can detect "unbalance," the most common cause of vibration. Proper monitoring allows misalignment to be checked while the machine is operating (Fig. 3). Causes of misalignment include wear and tear, temperature, and improper maintenance. Routine surveillance can also detect looseness, advanced wear and cracking, damaged gears, and failing bearings.

2. Computerized Reports and Program Benefits

Minimal effort is required to generate surveillance and summary reports, once the vibration data are collected. The vibration signals from the operating equipment are computer classified, using proprietary computer programs, into three levels of operation: (1) smooth, (2) marginal, and (3) rough.

Reports are generated for two levels of operating management. Detailed surveillance reports are generated and distributed to the equipment owners and the area maintenance supervisor so that corrective action can be planned. A second report, a summary report, is routed to middle management.

The vibration technicians at PPG–Lake Charles collect data on 27,000 data points from 2100 equipment sets. A 486 computer with a 300 megabyte hard disk is used to manage this vast amount of data. LeBlanc described the benefits of a

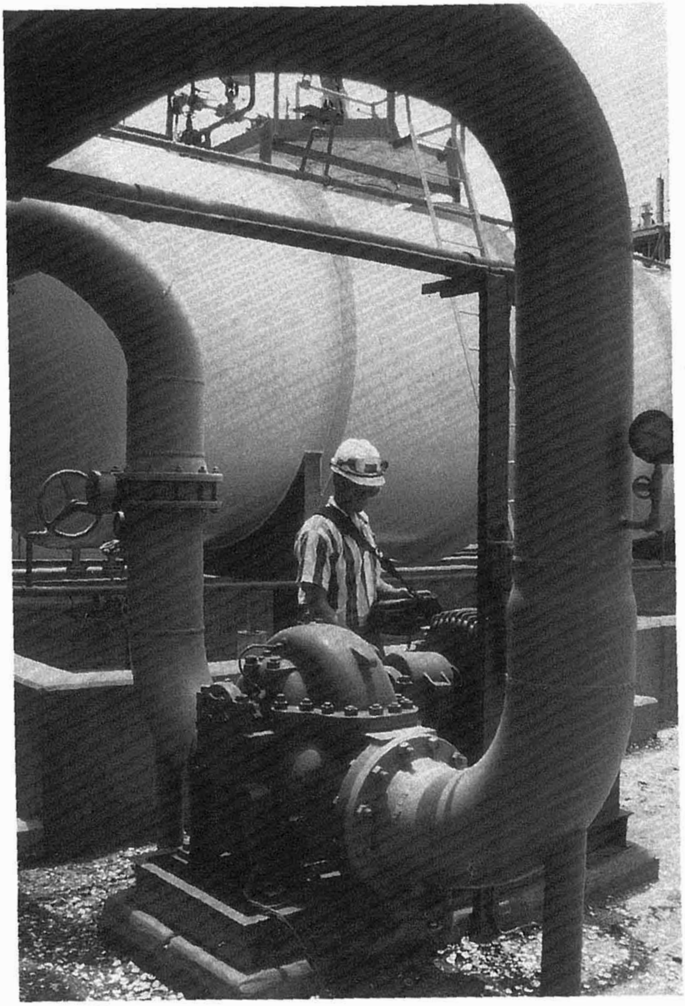

Figure 1 A vibration technician taking readings on a cooling water pump.

proactive vibration program by citing a number of case histories. His list of success stories of a vibration surveillance and analysis include the following [8]:

a. Postponing maintenance when it can safely be delayed. Certain costly steam turbine/generator units were scheduled every 6 years. With the data obtained through vibration surveillance and analysis methods, the intervals between

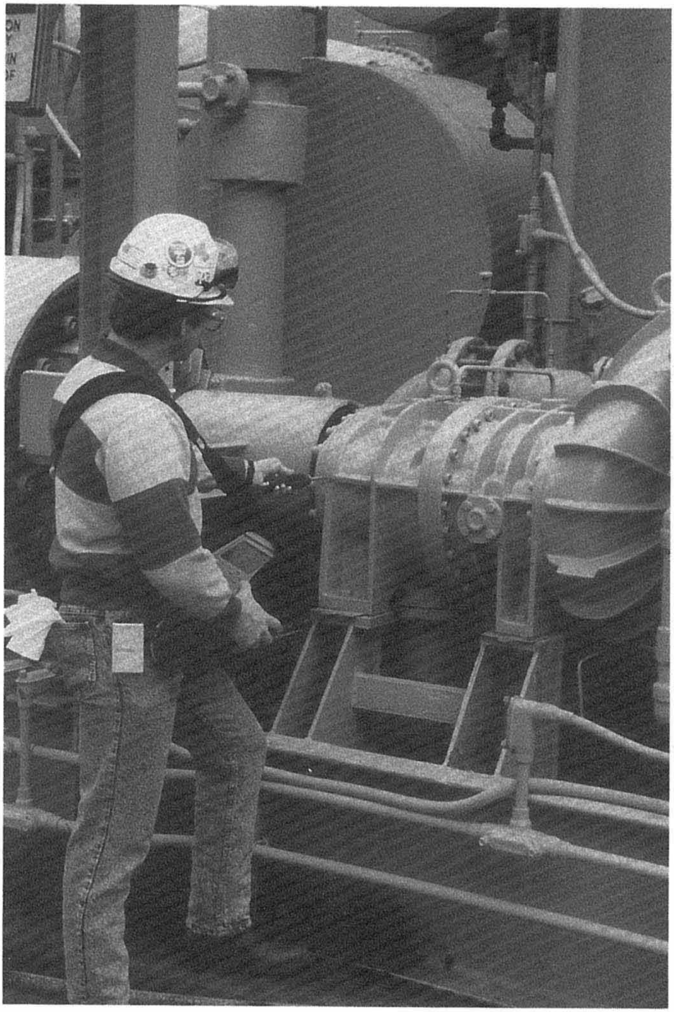

Figure 2 A vibration technician taking readings on a refrigeration compressor.

overhauls were extended, with the concurrence of the property insurance carrier.

b. Focusing repair efforts to the source of the machine problems by vibration diagnoses so that repairs are effective and efficient. One service request for the vibration technicians involved a 200-HP motor-driven, induced-draft fan.

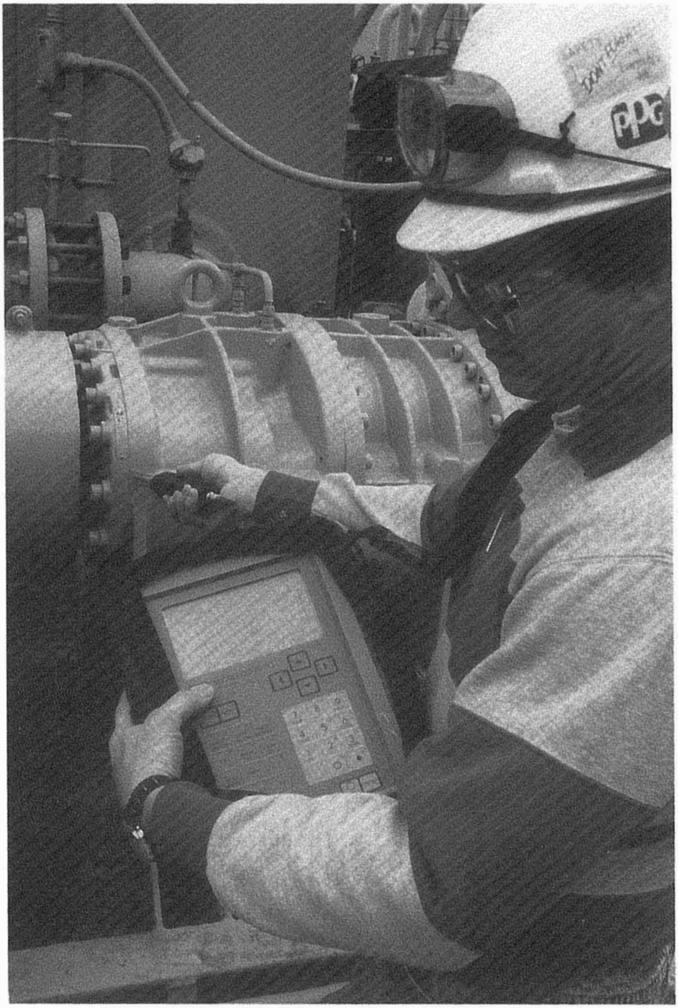

Figure 3 A close-up of a rotating machinery specialist with a vibration data acquisition module.

An area maintenance crew considered sending the large motor to a repair shop because they were unable to get the system to operate smoothly. The vibration technician diagnosed the problem as a simple imbalance in the fan, which was easily corrected with balance weights.

c. Evading extensive damage and safety hazards by planning and scheduling machine repairs as necessary, before complete failure.

d. Avoiding machine abuse. LeBlanc cites a case in which a centrifugal refrigeration compressor and gearbox set would experience high vibrations at certain loading conditions. Vibration analysis diagnosed the problem as an oil whirl, which was corrected by installation of a more stable compressor bearing design. As a result the refrigeration unit could perform over an extended operational range with no fear of oil whirl-induced, vibrationally generated, machine abuse.
e. Verifying the quality of a machine overhaul. The vibration program can provide assurances that the rotating equipment has been repaired correctly and that there are no residual problems.
f. Identifying and communicating problems and solutions that are common throughout the plant complex.

B. Use of Thermography Techniques for Rotating Equipment

As recently as 1960, commercial thermography was very limited for plant operations. An instrument that weighed 85 lb, required a 110-V power supply, and was cooled by liquid nitrogen, was the best equipment to produce a useful thermal picture [11].

Major technological advances made in infrared-imaging systems over the past decade has made thermography a useful predictive maintenance tool. It is a technique of producing pictures, called thermograms, from invisible thermal radiation. It is a noncontact means of identifying electrical and mechanical components that are hotter than they should be [11].

Thermography is useful in finding problems in electrical systems, mechanical equipment, refractory/insulation, steam distribution systems, and building and roofing surveys. Cost-cutting benefits of the technology include saving energy, protecting capital equipment investments, speeding inspection and diagnosis, and checking repair work.

Thermography has been used on electrical distribution systems for years by various corporations. Its use on rotating equipment is not as widespread, but it can be used to pinpoint the areas of the potential problem. Excessive heat can be generated from friction caused in part by faulty bearings, inadequate lubrication, misalignment, aging components, and other reliability-sacrificing problems [11].

Rotating equipment that can be checked using infrared thermography includes gears, bearings, shafts, couplings, V-belts, pulleys, compressors, vacuum pumps, and clutches. Proper baseline temperatures for mechanical components and systems are usually established by the manufacturers.

Thermography offers benefits similar to those of a vibration program. It can assist in the timing and planning of scheduled repairs. It is a valuable tool in protecting capital investment, in speeding inspections and diagnosis, and in checking repair work.

VI. MECHANICAL INTEGRITY PROGRAMS FOR PRESSURE VESSELS, STORAGE TANKS, AND PROCESS PIPING

The mechanical integrity focus of this section assumes that the stationary, existing chemical-processing plant equipment, including its storage and shipping facilities, are designed and fabricated to plant specifications and appropriate codes and standards. It is also assumed that the craftsmen are qualified, repair materials were certified (where necessary), and documentation of tests and inspections are retained. It furthermore assumes that any later modifications are also designed and fabricated in accordance with the appropriate codes and plant standards.

Appropriate codes include ASME Pressure Vessel Code, API Codes for Atmospheric and Low-Pressure Storage Tanks, the ANSI Piping Codes, the National Fire Protection Association Codes, property insurance guidelines, and any local or federal requirements.

In an article entitled "Plant Integrity Programs [13]," the author states:

> For an installed plant to achieve the level of integrity intended, a quality assurance program is needed to insure that the fabrication of new equipment is carried out with good engineering practice and standards. A similar program is required to assure proper quality of maintenance and in-plant modification work.
>
> To realize the intent of a proper engineering design in the construction and installation of equipment, it is important to assign an adequate number of people with proper training and experience. The inspection program should be structured to uncover problems that are then brought to the attention of management. And management must be committed to it firmly. In today's cost-conscious business environment, inspection frequently is considered a cost to be minimized, not a function required to achieve corporate goals. Inspection programs often have been put in place in response to a major disastrous incident that had high costs to the business enterprise. When programs are installed in response to such problems, they are frequently scoped and focused to prevent recurrence of a specific problem rather than to prevent all serious and dangerous incidents across the plant. An inspection program often is looked at in terms of the expended funds: "What specific failures have been prevented." If the program was truly effective, none will be visible. One can imagine what might have happened in the absence of such a program, but this frequently is not considered persuasive.

In short, a system must be in place to ensure that the integrity of the piping and vessels in chemical processes that handle potentially hazardous materials, such as flammables, combustibles, toxic chemicals, carcinogenic, or environmentally objectionable materials. Normally, a competent equipment inspection team, whose function is to detect any loss in integrity of equipment containing hazardous fluids, implements this system. The program should be capable of evaluating carbon steel, alloys, specialty metals, plastics, ceramic, or elastomers and other liners before conditions deteriorate to the point that there is a loss of containment. A properly managed and knowledgeable inspection team should be viewed as a cost-saving resource.

A. Corrosion Under Insulation

During the 1960s and 1970s many plant designers were not concerned with the potential problems of corrosion under insulation. As a result, today's troublesome pitting or lamellar rusting of carbon steel, chloride stress corrosion cracking of austenitic stainless steels, and other concealed metal loss can be found beneath insulation. This hidden metal loss may result in drips, spills, or ruptures, and result in environmental insults, releases of toxic materials, or conditions that allow significant quantities of flammables to escape, and could result in fires or explosions.

Intruding water, ingress of acid vapors, and process spills are some of the menaces that encourage corrosion problems on insulated equipment. Very few, if any, thermal insulation systems are completely waterproof, and the steel or alloy material covered by insulation is intermittently wet and dry. Brackets that support insulated vessels or brackets on insulated vessels to support piping, ladders, or walkways can act as traps to collect water.

Special care must be taken during the design stages and over the life of metallic equipment to reduce or eliminate the intrusion of water into the insulation by direct openings or by capillary action. The weather-proof jacket covering the insulation provides the primary barrier to rain, drips, and areas that are washed down. This barrier can be destroyed by walking on piping, by poor maintenance, and by weathering.

In early designs, thermal insulation was applied over bare steel or one coat of oil-based primer. According to the National Association of Corrosion Engineers (NACE) [14], the most serious corrosion problems seemed to be most prevalent in plants with chloride-containing or sulfide-containing environments. These corrosion problems were further aggravated in high rainfall, high humidity, and salt air locations.

The NACE studies determined that the most severe corrosion problems occurred under thermal insulation at temperatures between 140 and 250°F (60 to 120°C) at which the temperatures were too low to quickly boil off any intruding water. At temperatures higher than the boiling point of water, other corrosion problems can occur. The intruding water can carry chlorides and other corrosive elements that can concentrate and result in stress corrosion cracking.

When serious corrosion was first noted, many engineers decided that better surface preparation and primer were needed. Inorganic zinc was then often selected and used to prime carbon steel that was to be covered with thermal insulation. In the 1970s some U.S. Gulf Coast corrosion engineers noted that the presence of inorganic zinc seemed to accelerate corrosion.

A NACE task group reported [14] in 1989:

Inorganic zinc primers did not perform well under insulation, even if they were top-coated.

Catalyzed epoxy coatings lacked sufficient high-temperature resistance to soaked insulation for the long-term exposure.

The best generic coatings for carbon steel that may be surrounded by wet insulation in the 140–250°F (60—120°C) range are the epoxy phenolic and the amine-cured coal tar epoxy formulations.

Chloride stress cracking corrosion was also a problem when austenitic stainless steels were covered with thermal insulation. The NACE paper also discusses the protective coatings for stainless steels and provides sandblasting and coating application guides for stainless and carbon steels [14].

To diminish the undesirable modifications by aging within chemical plants, the design engineer, operator supervisor, and the maintenance foreman must focus on the problems of corrosion under wet insulation. Certain practices should be followed, including

a. Providing an appropriate coating system for all new installations.
b. Providing a periodic inspection of the piping or equipment in areas around potential points of moisture intrusion by removal of insulation.
c. Repairing mechanical damages to weather barriers and thermal insulation quickly.
d. Avoiding the use of zinc, cadmium, or zinc-rich coatings on austenitic stainless steels. Even stainless systems operating at low temperatures can accidentally be heated by fire or welding repairs and can cause stress cracking.
e. Becoming familiar with NACE publication 6H189.

The degree and frequency of external inspection of piping under insulation is site-specific. Draft 8 of the API Piping Inspection Code [15] has added this note of caution, “The extent of a ‘Corrosion Under Insulation Inspection’ program may vary depending on the local climate; warmer, marine locations may require a very active program, whereas cooler, drier, mid-continent locations may not need as extensive a program.”

B. Inspecting Pressure Vessels, Storage Tanks, and Piping

In the typical chemical plant, inspections primarily address the corrosion and weld repairs of steels and alloys. However, these additional elements also need regular inspections to ensure containment: the equipment’s foundation, the connecting piping, exterior coatings, insulation, rubber linings or ceramic linings within reactors or tanks, fiberglass vessels, and piping. The inspection function should be conducted and managed by personnel who are independent of production, not unduly influenced by limited maintenance budgets, and still have management’s ear.

It is not the intent of this chapter to review in detail the types of inspection tools, techniques, and procedures. Recent American Petroleum Institute publications, available at moderate cost, do an excellent job in that respect.

1. Inspection of Pressure Vessels and Storage Tanks

The intent of the mechanical integrity section of the OSHA process safety law [1] is to prevent or reduce catastrophic releases. An equipment classification system is a requirement of the law. One simple system involving three priorities was previously defined. See Sec. IV for a full description of three levels of priorities. The frequency and extent of external and internal inspections should be related to the priorities.

The inspection of pressure vessels is addressed in *API 510, Pressure Vessel Inspection Code—Maintenance, Inspection, Rating, and Alteration*, June 1989 [16]. The API 510 is an excellent reference. Some countries, provinces, and states require pressure vessels to be inspected by government agents. In those cases, the governing agency rules should be the standard reference.

2. External Inspections of Vessels

Visual external inspections (or in-service inspections) should be made regularly for operating vessels to help ensure the integrity of the vessel (Fig. 4). The frequency of this inspection should be between semiannually and once every 3 years for most chemical plant processes, depending on the aggressiveness of the chemical plant atmosphere; however, API 510 will accept intervals up to once every 5 years.

Visual external inspections are often made with the normal physical limitations of accessibility and visibility that exists at the time of the inspection. Normally, the removal of insulation, the use of scaffolds or manlifts are not employed during frequent external inspections unless "tell-tale" conditions warrant a closer examination. In those instances, the difficulty of access to any portion of the tank should not be allowed to prevent a thorough inspection.

The following items should be considered during an external inspection whenever applicable:

a. *Anchor bolts*: These should be painted and free of corrosion; this is especially important on tall towers.
b. *Foundations*: Concrete pads, base rings, and piers should show no signs of serious spalling, cracking, or settling. Any such conditions including uneven settlement, exposure of reinforcement should be noted.
c. *Supports and skirts*: These should be free of corrosion and signs of deflection or buckling; ideally, skirts and supports should be accessible for inspection, sandblasting and painting.
d. *Tank accessories*: Ladders, walkways, pressure gages, sight glasses, associated piping (including supports, pipe hangers, and such), should be service-

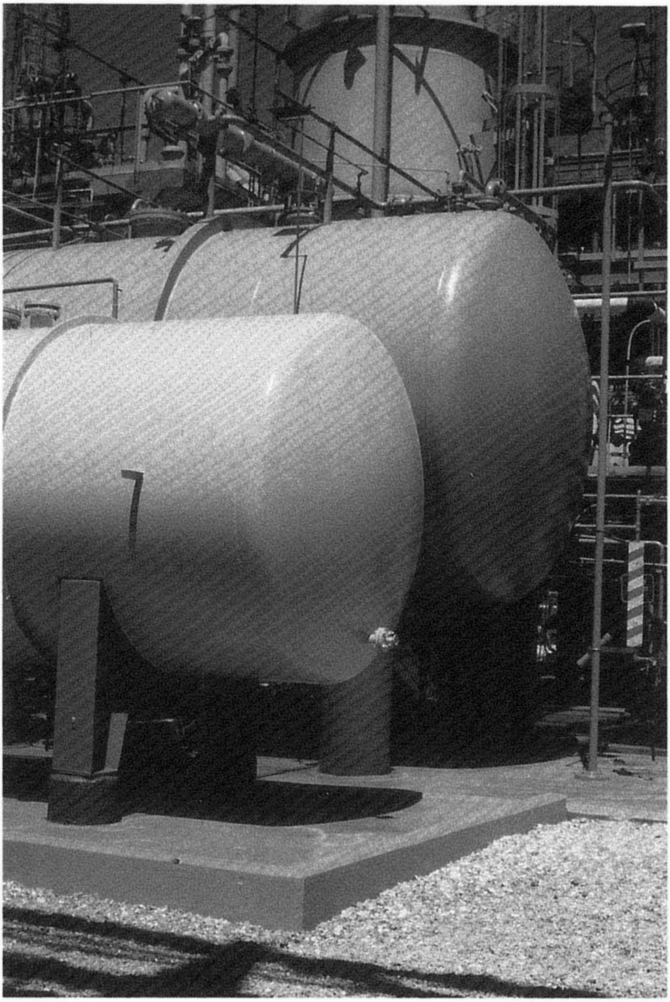

Figure 4 Well-maintained pressure vessels handling hazardous materials.

able. Ladder rungs, stair treads, and handrails should be carefully examined as the tank is being climbed.

e. *Coatings*: Paint on metals should be intact to reduce corrosion potentials.
f. *Grounding*: Grounding cables should be securely attached to the tank and the grounding grid in the foundation.
g. *Heads and shell*: These containment elements should be free of corrosion, distortion, obvious cracks, dents, bulges, blisters, signs of leakage, and so on.

h. *Low-pressure tanks*: The shell of the tank should be checked for leaks, buckles, and bulges. Thickness measurements must be taken at points where corrosion is evident.

   Special attention should be given to the shell near the bottom on low-pressure tanks, since corrosion is sometimes caused by corrosive soils or trapped water. Tank roofs also require detailed inspections to establish that it is safe to stand on them. Extra care should be exercised until the general condition of the roof is established.

i. *Fireproofing or insulation*: These should be weather-sealed, and intact to prevent collection and retention of moisture against metal surfaces that could corrode.

j. *Nozzles, flanges, and valves*: These should be free of signs of corrosion and leakage. All flange bolts should be installed and be of the correct diameter and length.

k. *Relief devices and safety relief valves*: These should be mounted in the vertical position. Combinations of rupture disks mounted below safety relief valves should have a pressure gauge or other device between the disk and the valve to warn that the rupture disk is leaking.

In the event of detection, or suspicion of some form of corrosion or deterioration that needs further investigation, the inspector is encouraged to recommend more extensive inspection or a different form of inspection.

3. Internal Inspections of Vessels

There is no reliable substitute for a detailed internal inspection. Internal inspections are essential to determine possible weakening of the vessel or any conditions that may develop into unwanted leaks (Figs. 5–8). Typically, internal inspections are established, with frequencies between semiannually and once every 10 years. The exact frequency is best determined by the corrosive nature of the chemical being processed or stored, including the effect of trace components and the past history of this equipment.

The global view of a vessel provided by an internal inspection can be much more revealing than any of the limited judgments based upon thickness readings from the outside of the tank. Visual examination is usually the single most important and universally accepted method used to ensure fitness of service of a vessel. The visual inspection should include examination of the shell and heads for cracks, blisters, bulges, operating deposits, corrosion products, erosive patterns, and other deterioration. In various aggressive chemical services, it is important to examine the welded joints and the heat-affected zones for accelerated corrosion, for cracks and other metal loss. Often the use of a bright flashlight placed parallel to the internal walls of a vessel shinning away from the inspector will help to visually identify metal loss, or distortion of the walls.

Figure 5 An operations foreman checks for blinding and samples the vessel's atmosphere before tank entry.

Another often-used test is metal thickness verification, using the simple handheld ultrasonic thickness meter. Ultrasonic wall thickness measurements resemble radar or sonar in technique. A burst of ultrasound is emitted by a probe into a material to be bounced off the rear wall. The time interval measured for this reflection to return is a measure of wall thickness (Fig. 9).

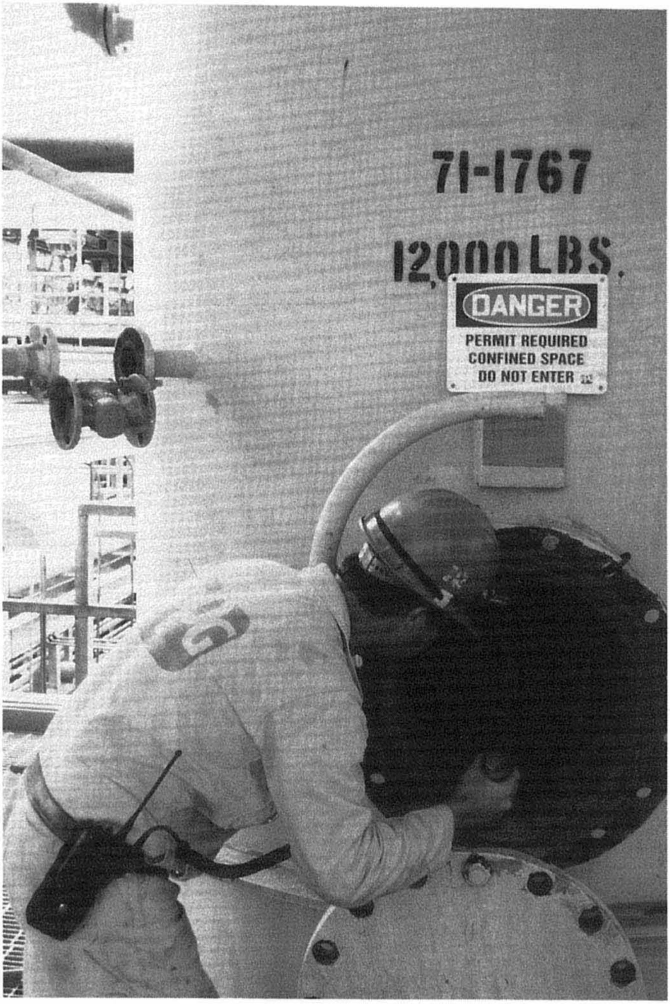

Figure 6 A pressure vessel inspector making an initial assessment of the vessel and determining any special inspection needs, such as ladders, scaffolding, or extra lighting.

If the vessel is not insulated or does not have a liner, the wall thickness may be tested from either the outside or from within. Often corrosion patterns are not uniform, so it is best to check the thickness from the inside. Other inspection methods to ensure mechanical integrity of vessels may include magnetic-particle examination, for cracks at or near the metal surface; dye penetrant examination, for disclosing cracks or pin-holes that extend to the surface; radiographic examination; acoustic emission testing, and pressure testing.

Figure 7 A pressure vessel inspector enters a confined space after the vessel is blinded, tested, and cleared, but he still relies on a manway watchman.

In certain cases, a solution of one part liquid dish-washing soap mixed in ten parts of water can be used to check for leaks on certain systems that can be pressurized. For safety's sake pneumatic testing should be limited to 5 or 10 psig and not greater than 25% of the maximum allowable working pressure of the weakest component being tested. A garden sprayer can be used as an inspection tool.

Soap suds can be used to check new and repaired welds on floors of low pressure tanks. A vacuum box is a common way to check tank floor seams (Fig. 10).

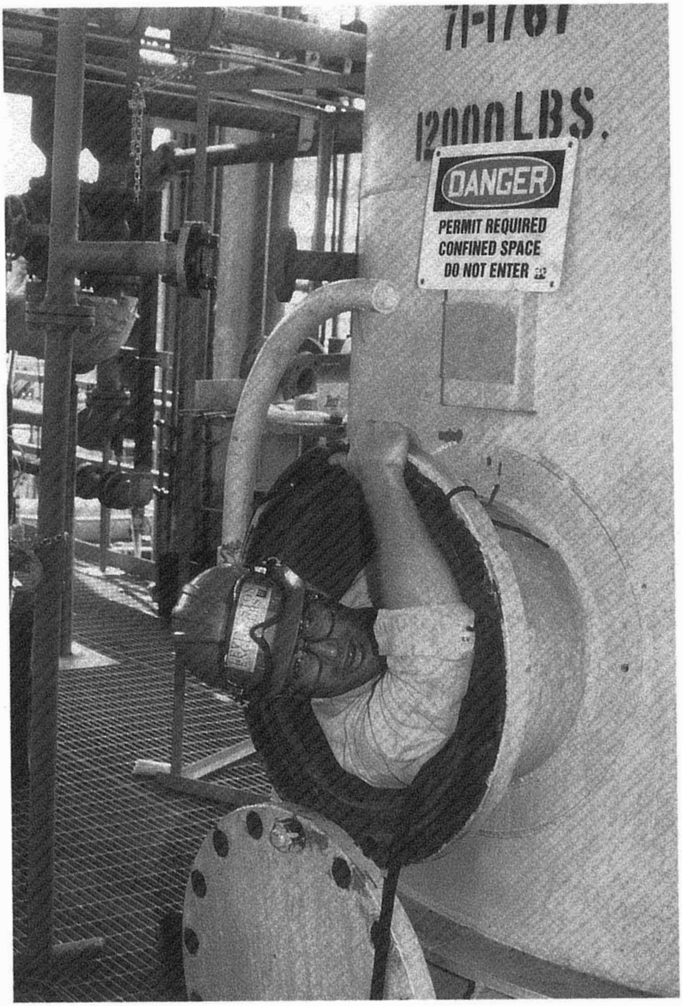

Figure 8 A pressure vessel inspector finds it difficult to exit the vessel gracefully.

Each weld is coated with soapy water and a box that has a clear window in the top is placed over the weld and the box is evacuated. If there are leaks, soap bubbles are created in the box, and the defective weld is marked for repairs.

The inspection of low-pressure tanks is amply covered in *API Standard 653: Tank Inspection, Repair, Alteration, and Reconstruction* [17]. This short practical booklet covers such items as inspector qualifications, concerns for tank bottom corrosion, and others. Appendix C of API 653 offers a four-page checklist

Figure 9 An inspector verifying wall thickness on a vessel near a nozzle that had experienced metal loss.

Figure 10 A vacuum box and soapy water can be used to check for leaks in welds on the floor of low-pressure tanks.

for tank inspection of a tank while in service and seven pages of checklists for internal inspections (Fig. 11).

4. One Chemical Plant's Pressure Vessel Management Program

The Freeport, Texas, Dow Chemical Plant shared details of their pressure vessel management program a few years ago [18]. The Dow Texas pressure vessel program had evolved over 25 years and covered about 12,000 pressure vessels.

The scope of pressure vessels covered by Dow included any vessel with an internal diameter wider than 6 in. (15 cm) and having a relief valve setting of 18 psig (125-kPa gauge) or higher or a rupture disk with a bursting pressure of 25 psig (170-kPa gauge) or greater. The program included vendor or contractor equipment, but excluded residential water heaters [18].

(*a*) *Vessel design review and registration.* The Dow Chemical Texas Division Pressure Vessel Review Committee determines if a vessel meets the requirements of the ASME code or Dow's engineering specification, or both. If a pressure vessel meets these requirements, it is assigned a unique index number. Such a pressure vessel is either fabricated in a commercial fabrication shop, is received as a part of a package unit (such as a refrigeration unit or an air compressor skid), or is built within a Dow fabrication shop [18].

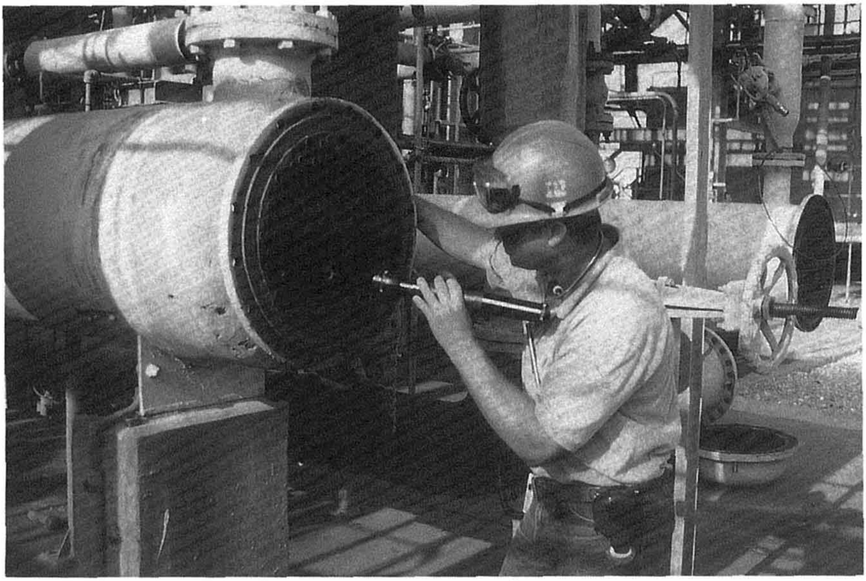

Figure 11 An inspector examines the condition of the tubes on a condenser. Water-side corrosion can occur if the water treatment is insufficient.

If a vessel is to be fabricated outside of the Dow Chemical Company, the requisition must be routed to a Dow buyer who has attended training courses and is familiar with engineering specifications. This buyer works under the guidance of a Custom Fabrication Purchasing Agent. Procedures require that all specifications, drawings, and requisitions are approved by a pressure vessel "designer," who is also responsible for reviewing vendor calculations and fabrication drawings.

These procedures ensure that each vessel is reviewed by at least two Dow employees, plus employees of the fabrication shop, before the start of construction. A pressure vessel inspector follows the fabrication and ensures that the company specifications are met and that ASME code considerations are achieved. The inspector also arranges to have a set of wall thickness measurements made to be a baseline for any corrosion studies. Therefore, before a vessel is put in service at least three Dow employees have examined various aspects of the job's quality [18].

The Pressure Vessel Review Section (PVRS) is a service organization that assigns index numbers, maintains current records, and inspection status on all vessels. The PVRS files include:

Manufacturer's data report
Registration form
Actual thickness measurement reports
Minimum allowable thickness calculations
Relief system design calculations

In addition, the typical owner files include

Vendor calculations
Mill test reports
Shop drawings
Visual inspection reports

(*b*) *Vessel inspections at Dow, Freeport.* The Dow Freeport inspection program was reported to include an annual visual inspection while the vessel is in operation. The initial out-of-service (or internal) inspection is scheduled within the first 5 years a vessel is in service, and subsequent internal inspections are performed at least every 5 years thereafter. If either the owner or the inspector feel it is necessary for more frequent in-service and out-of-service inspections, the schedule is adjusted to accommodate that need. The PVRS can extend the frequency of internal inspections up to once in 10 years, if sufficient data support this conclusion [18].

The Dow Freeport in-service inspection procedures are similar to those reported earlier in this chapter. The Dow out-of-service (internal) inspection includes ultrasonic thickness measurements at all benchmark locations. Other test methods include shear wave ultrasonics, eddy current, and radiography. The ultrasonic thickness readings are used to project the remaining useful life of the vessel and when the next internal inspection should be scheduled.

(*c*) *Repairs, revisions, and other status changes on Dow Freeport vessels*. Under this system, Dow equipment owners are required to report a change of status when any of the following occur [18]:

Rerating of the vessel
Change in emergency relief requirements
Change in service
Return to service after being idle for a prolonged period
Repair or modification to a pressure-containing part

If pressure-containing parts of a vessel corrode or erode to a thickness less than the minimum allowable, then it must be reconditioned or given a lower pressure rating, consistent with the new conditions. When a vessel is rerated, the relief system is reviewed. The Dow system seems to be a very practical method to acquire and maintain pressure vessels in a safe manner [18].

C. Inspection of Aboveground Piping

The inspection of piping is very well covered in the practical API's Recommended Practice 574, *Inspection of Piping, Tubing, Valves, and Fittings* [19]. The recommended practice addresses the description of piping components, causes of deterioration, frequency of inspection, inspection tools, inspection procedures, and record-keeping.

The API-574 guide is full of practical information including piping inspection procedures with these hints:

a. Inspect in areas in which the piping could have experienced metal loss because it was affected by velocity or turbulence. This includes the outer surfaces of piping bends and elbows, areas around tees, piping around reducers, orifice plates, and throttling valves, and the piping downstream from them.
b. Inspect areas of piping at which condensation or boiling of water or acids can occur.
c. Pay attention to slurry piping, and piping in which catalyst or other abrasive materials are conveyed.
d. Dead-ends subject to turbulence, condensation, or areas in which freezing is likely to occur should also be examined.
e. Piping areas just downstream from a corrosive chemical injection point should receive particular examination.
f. In high humidity areas, corrosion is often found on piping that rests on beams if pipe shoes are omitted.

g. Frequently, corrosion under piping insulation is a substantial threat. Corrosion is found adjacent to pipe supports, on small-bore piping for the vents or relief valves, as the small-diameter piping protrudes from the top of an insulated larger line or protrudes beneath the pipeline. Water can enter and accumulate in these locations.

Corrosion under insulation, as generally discussed in the previous pages, is a genuine concern, because it can be so easily concealed. One plant reported that much of its piping had to be replaced after a major expansion required removing insulation that had been covering piping for over 20 years. Some 8-in. piping, with 0.375-in. (0.95-cm) wall thickness, that operated at 475 psig (3300-kPa gauge), had pitting so deep that a mechanic could push his finger through the pipe wall. Also, a 6-in. pipe, with 0.375-in. (0.95-cm) walls, that operated at 500 psig (3450-kPa gauge), had external pitting 2 in. (5 cm) in diameter and 0.160-in. (0.41-cm) deep. There were also many small-bore pipes with pinholes corroded through in many area [20].

The *Safer Piping—Awareness Training for the Process Industries* module [21] discusses a survey of 13-year-old carbon steel piping. The thermally insulated piping that was examined, carried liquids at temperatures between - 10°C and 140°C. Initially, about a third of the pipes in a 10-km (6.2-mile) network were inspected and the following was observed:

10% of the piping had a 50% wall thickness decrease
10% of the piping had 25–50% wall thickness decrease
30% of the piping had 10–25% wall thickness decrease
50% of the piping had a 10% wall thickness decrease

The safer piping module sums up the corrosion on piping under insulation as a problem of water ingress on piping with poor surface protection. Engineering, construction, and maintenance recommendations parallel those presented in Sec. VI.A earlier in this chapter.

Piping is often not appreciated as well as it should be. As many chemical plants grow older, more piping corrosion problems will occur (Fig. 12). It is important that piping is regularly inspected so that personnel are not subjected to leaks and releases.

VII. PROGRAMS FOR SAFETY CRITICAL INSTRUMENTS AND SAFETY RELIEF VALVES

Safety relief valves (SRVs), safety critical alarms, and critical shutdown systems can be modified easily by aging or tampering. The local environment surrounding the device, including cycles of freezing and thawing, moisture, corrosive contact with equipment internals, localized corrosive emissions, general atmospher-

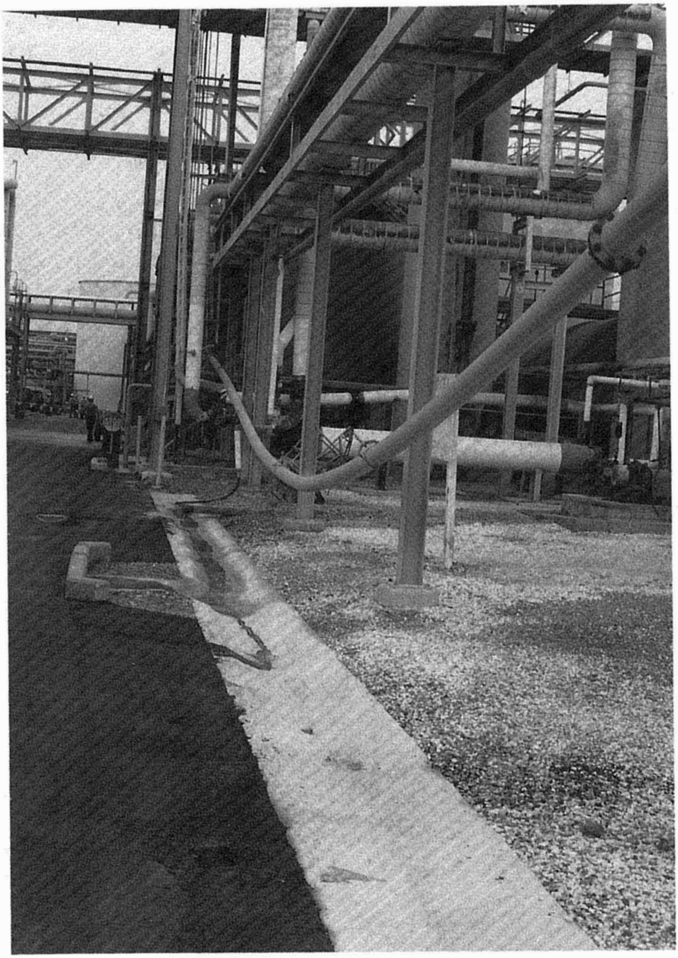

Figure 12 Pipe hangers corrode and pipe drops from the rack.

ic corrosion, dirt, sand-blasting, painting, and tampering, can alter the ability of these process safeguards to properly function.*

---

*McGraw-Hill Publications has granted special permission to use excerpts from one of my previous articles in *Chemical Engineering* magazine entitled "Don't Leave Plant Safety to Chance" Volume 98, No. 2, February 1991 [6]. Many paragraphs will be used verbatim in the rest of this section on safety relief valves, without being shown as quotes or without further reference.

All of the effort expended in designing plant safety systems is of little value unless accompanied by an adequate "proof-test" program and regular maintenance. These safety systems—consisting of such components as safety relief valves, tank vents, critical alarms, and protective isolation and shutdown devices—do not operate on a continuous basis. Rather, they are called into service only periodically, to warn of, or to prevent, conditions that could lead to plant accidents [6].

After just a few years of neglect, many protective devices and preventive process loops could become ineffective. Unfortunately, these safety system failures may go undetected until a crisis occurs.

Determining the methods and frequencies of testing for critical instrument loops must be tailored to each plant's needs and resources. No matter how often testing is carried out, the facility must be committed to checking all plant safety devices regularly. Testing programs must be impervious to all the other demands taxing a plant's resources, including key personnel changes. Periodic in-house audits should be conducted to ensure that testing methods are effective.

A. Safety Relief Valve Considerations

Safety relief valves (SRVs) are critical elements to the overall process safety of a chemical plant. The decisive functions of these safeguards are described in *Valve Magazine* [22], which begins with this attention-getting paragraph:

> Perhaps no one valve plays as critical a role in the prevention of industrial accidents as the pressure relief valve. This "silent sentinel" of industry, sometimes referred to as the "safety" or "safety relief" valve, is essential in helping us minimize industrial accidents caused by the over-pressurization of boilers and pressure vessels.

The following observations were reported by Van Boskirk at an AIChE meeting in southeast Texas [23]:

> Relief valves are very deceiving in appearance. Because they look like pipe fittings, they are often handled and stored in the same manner. This *misconception can lead to significant abuse and damage. RELIEF DEVICES ARE DELICATE INSTRUMENTS AND MUST BE TREATED AS SUCH.*
>
> It is reasonable to draw an analogy between a shotgun and a relief valve. Both are made from high quality materials. Both contain parts machined to extremely close tolerances. Both are expected to operate accurately and reliably when called upon. Both are *intended to provide many years of dependable service, AND BOTH CAN BE EASILY RUINED THROUGH ABUSE, MISUSE, AND NEGLECT.*

B. In-House Testing of Safety Relief Valves

Undetected corrosion, fouling of safety relief valves (SRVs), or fouling in the inlet or outlet piping of the SRV can adversely affect the setpoint and the relieving flow rate. Equipment that has been improperly specified, installed, or maintained is particularly susceptible to undetected corrosion and fouling.

One major chemical complex, PPG Industries, Lake Charles, Louisiana, relies on about 2200 individual safety relief valves and conservation (pressure/vacuum) vents for overpressure protection. This large complex has a variety of unique materials and corrosion challenges. On a typical day, huge quantities of saturated brine (NaCl) enter the complex, and several thousands tons of chlorine are produced. In the humidity of southern Louisiana, the salt, chlorine, co-product caustic soda, and hydrogen chloride gas circulating throughout the plant can attack process equipment. Other products, such as vinyl chloride monomer and chlorinated solvents, require unique elastomers for "O"-rings and gaskets.

PPG Lake Charles was one of the first chemical plants to openly discuss problems users' experience by improperly specifying and testing safety relief valves. Expertise on new safety valves could be obtained from manufacturers; sizing methods were documented by various designers and users, but, no one published practical SRV testing and SRV corrosion problems.

Over the years, PPG Lake Charles has shared its findings with various organizations, including the Louisiana Loss Prevention Association, the American Institute of Chemical Engineers, and the Chemical Manufacturers Association. A series of technical papers [6,24,25] have documented the progress and problems.

Warren Woolfolk, Inspector, was assigned to be PPG's first SRV Test Program Coordinator in 1974. His prime responsibility was to ensure that SRVs were properly specified, installed, tested, and that there was sufficient record-keeping. He gathered information from SRV manufacturers, helped develop centralized record-keeping, and improved engineering specifications.

Woolfolk became concerned that the SRV test facilities, which were commonly used by many commercial SRV test and repair shops and most chemical plants, were inadequate. The typical test stand consisted of a clampdown table connected to a compressed air cylinder by a 1/4-in. (0.6-cm) tubing. Woolfolk experimented with surge accumulators to test relief valves, using a substantial volume of air to mimic actual process conditions. In 1983, after some years of testing SRVs with significant volumes of gas, Woolfolk presented *Process Safety Relief Valve Testing* [24] to the Loss Prevention Symposium of the American Institute of Chemical Engineers. The resulting published article created much interest; Woolfolk developed an updated version for the Chemical Manufacturing Association in 1986 [25].

However, several of U. S. chemical plants were still using the primitive clampdown table connected to a compressed air cylinder in the late 1980s. The

American Society of Mechanical Engineers (ASME) understands the need for a sufficient volume of gas to properly test a safety relief valve. An ASME subcommittee is currently shaping a policy statement on the optimum volume accumulators to test SRVs.

C. Selection of Safety Relief Valve-Testing Equipment

Until the ASME provides some defined guides, a concerned chemical plant may wish to develop their own criteria for volume testing or gather current data from various SRV manufacturers. Limited-volume testing often fails to result in a distinct "pop." (A *pop* is defined as the rapid opening of the SRV with its associated audible report.) If a valve only "simmers," instead of an actual pop, internal parts can be misaligned on some SRVs, resulting in leakage [25] (Fig. 13).

The simmer point is seldom at the same pressure as the pop pressure. Most spring-loaded safety relief valves simmer at 90—95% of the set or popping pressure. In other words, some SRVs could be set 5—10% too high (and, in cases where springs were faulty, larger errors of up to 20% or more could occur).

Simmering does not guarantee that the SRV will fully open to discharge nameplate flow capacity.

PPG Industries, Lake Charles, used several salvaged vessels as accumulators to test various SRVs and determine the optimum-sized accumulator. An oversized accumulator could be costly in compressed air usage, whereas an undersized tank would not provide the necessary volume to allow the SRV to properly respond.

After limited testing to estimate the required accumulator volume for their needs, a decision was made that a 3-ft^3 (85-L) test tank (or accumulator) rated at 500 psig (3500-kPa gauge) would provide a representative pop action for an SRV with a normal blowndown ring setting up to and including a 3-in. *L* orifice. For larger safety relief valves, up to and including a *T* orifice valve, a 15-ft^3 (425-L) test tank also rated at 500 psig was provided. For this plant's higher-pressure SRVs, a 4.4-ft^3 (125-L) tank with a 3000 psig (20,700-kPa gauge) rating was installed. A smaller tank 1/3 ft^3 (9.4 L), rated at 5000 psig (35,000 kPa), that can be used pneumatically or hydraulically was provided for some special cases.

Later an additional 6.5-ft^3 (184-L) tank was engineered for vacuum and low-pressure applications and installed. Any plant considering installation their own test facilities should carefully study the specific needs of their unique situation.

All test accumulators were mounted directly below the test table (Fig. 14). These vessels were mounted vertically with a 2:1 ellipsoidal heads on top and bottom. The top head has a well-rounded outlet nozzle-sized equal to the SRV inlet to be tested. To test smaller-orifice SRVs, ring-shaped adaptor plates, having an opening equal to the SRV inlet, are used. This arrangement reduces the possibility of starving the flow to the valve.

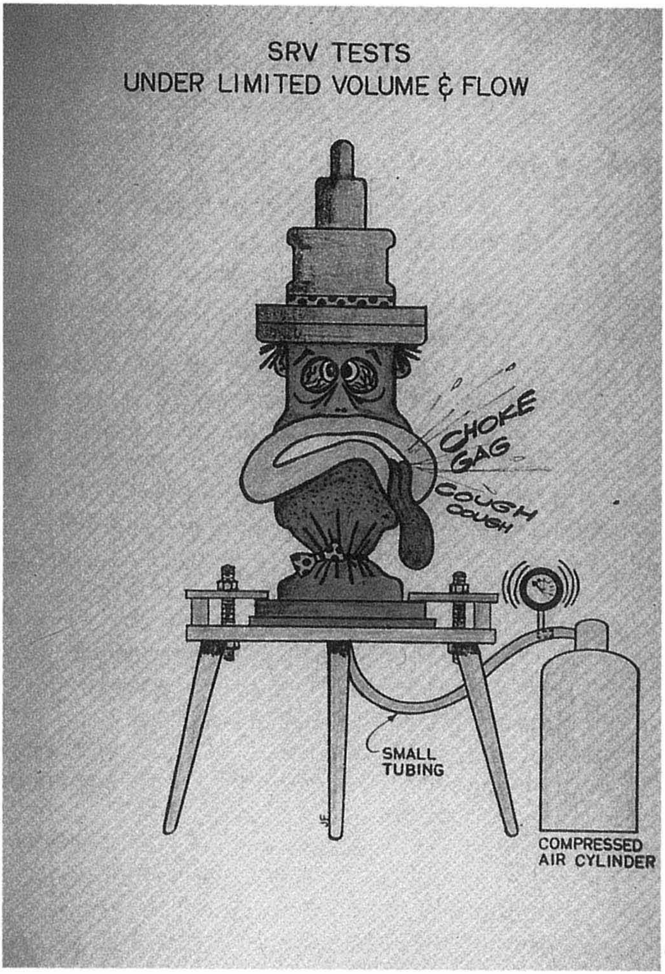

Figure 13 A cartoon of a safety relief valve being tested on a test-stand *without* sufficient volumetric flow rate.

Accumulator depressurization piping was designed to ensure that any moisture, pipe scale, or other foreign material is expelled on each tank depressurization. The depressurization piping is connected to the low point in the accumulator. A complete description of this system can be found in Ref. 25.

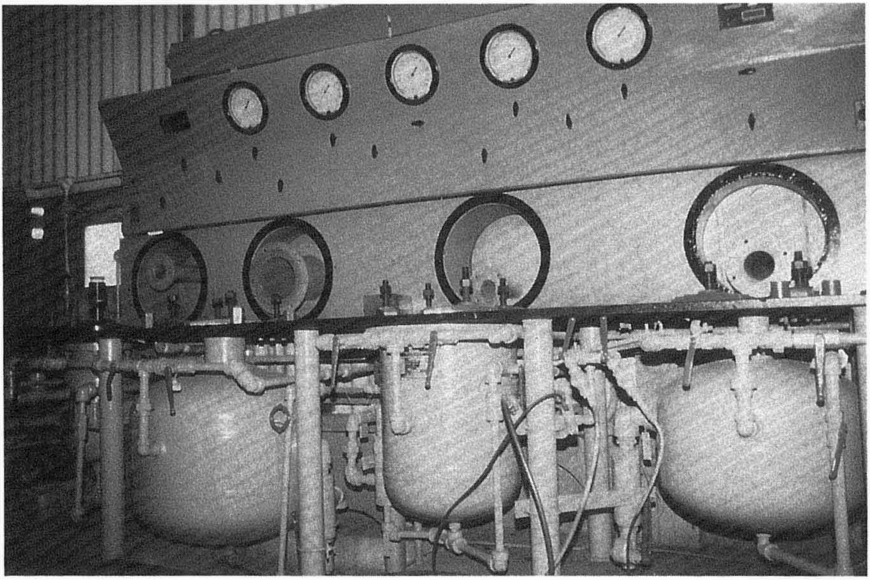

Figure 14 Safety relief valve test-stand for dynamic testing.

D. Safety Relief Valve Testing and Repair Procedures

Small chemical plants with just a few dozen SRVs must consider the local SRV test and repair shops for help. The larger chemical plants must decide if they want to invest in equipment, factory training for the mechanics, and approve the capital for an inventory of spare parts to properly maintain the SRVs (Figs. 14 and 16).

If a chemical plant decides to operate an in-house SRV test and repair program, it must have the necessary resources. These essential resources include sufficient volume test equipment, factory-trained mechanics, a supply of spare parts, and an up-to-date quality control manual. Valve test performance should be carefully monitored under simulated process conditions to ensure that an adequate volume of gas (usually air) is being used.

A good quality control manual should include specific actions to accommodate testing requirements. The SRVs should be pretested and the appropriate data on the initial pop pressure and blowdown observed and recorded. This is the procedure for all valves removed from process service as well as for new valves [6].

The safety valve is disassembled and examined, and all internal parts are blasted with glass shot, to remove rust and surface accumulations. The valve body is then sandblasted and repainted, both internally and externally.

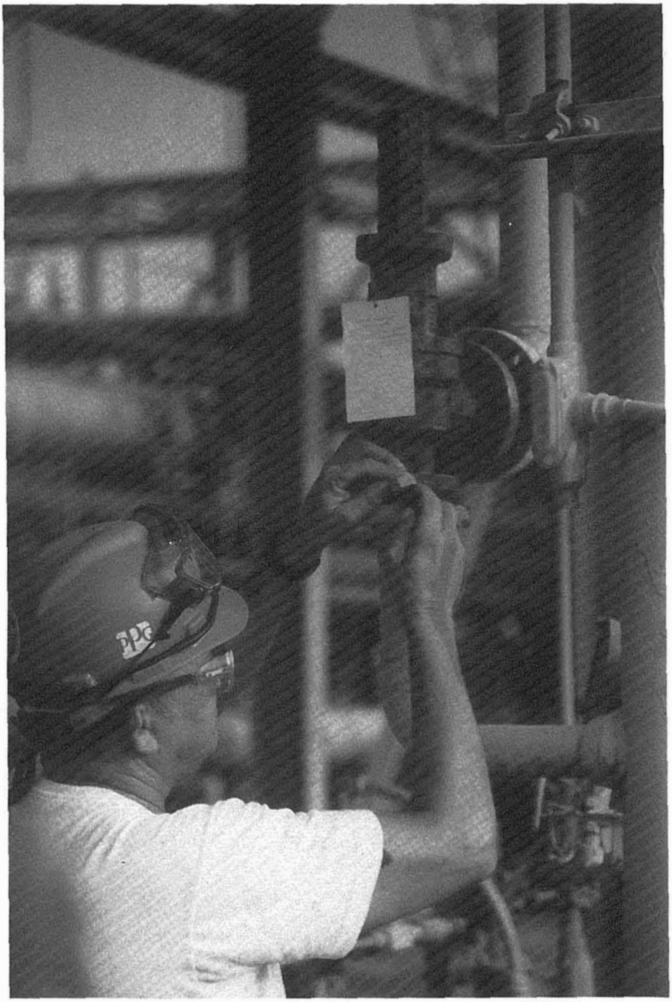

Figure 15 A mechanic is removing a safety relief valve (SRV) from a unit. The mechanic records the condition of the inlet and outlet piping components on the tag before sending the valve for testing.

During this stage, all defective parts are replaced or reconditioned to the manufacturer's specifications. Metal seats are machined to the desired flatness. All moving or guiding surfaces, and all pressure-bearing surfaces, are lightly lubricated [6].

Once the valve is reassembled, the SRV is performance tested and adjusted to the correct set pressure, and the blowdown is set. All bellows-type and spring-

Figure 16 A well-trained mechanic testing a safety relief valve just as it is received from the unit.

loaded valves exposed to backpressure are backpressure tested to ensure the integrity of the bellows and gaskets on the exhaust side of the SRV [6].

Tamper-proof seals are added to discourage unauthorized or undetected field adjustments. Once testing is complete, a sheet-metal identification tag (usually of soft lead, which is easy to imprint, yet impervious to corrosion) is attached to the SRV. The tag records the location number, set pressure, and test date.

Safety relief valves must be kept clean during transit and storage; hence, valve openings are sealed with tape and cardboard. If lifting levers are present, they are tied down to protect the SRVs' seats en route to the user. The valve must be transported and stored in an upright position.

Mechanics record SRV test results and observations on a checklist. This information includes initial test pressure, and the condition of seats, stems, guides, springs, and inlet and outlet nozzles, after arrival at the test-stand. The appropriate operations supervisor receives these results, and a copy is maintained in the central SRV records [6].

E. How Often is Often Enough when Testing Safety Relief Valves?

At PPG Lake Charles different test cycles for different process-safety equipment have been established. Some are tested as frequently as every 6 months; some

Figure 17 A mechanic is tightening down the bolts as he reinstalls a safety relief valve (SRV) after it was tested in the shop.

are tested as infrequently as once every 3 years. The SRVs operating in dirty, fouling, or highly corrosive conditions may require more frequent testing to ensure reliable service.

State laws, corporate policies, insurance regulations, and any other appropriate mandates should be considered when establishing regular-testing cycles. Additionally, any SRV that pops or discharges a corrosive or tar-like fluid should be removed and reworked as soon as the discharge is detected.

At the Lake Charles facility, about 30% of the overpressure devices are tested annually: another 60% are tested every 24 months, and the remainder are tested at other frequencies. In general, SRVs on the following types of equipment are tested at the corresponding intervals [6].

Positive-displacement pumps or compressors: every 12 months
Vessels processing corrosive chemicals: every 12 months
Processing vessels with heat sources, including stills, kettles, hot-oil systems, and low-pressure, refrigerated storage tanks: every 12 months
Boilers: every 12 months (Louisiana law requires boiler SRVs to be tested, set, and sealed annually)
Process steam headers: every 24 months
Storage vessels containing clean (nonplugging, noncorrosive) fluids: every 24 months

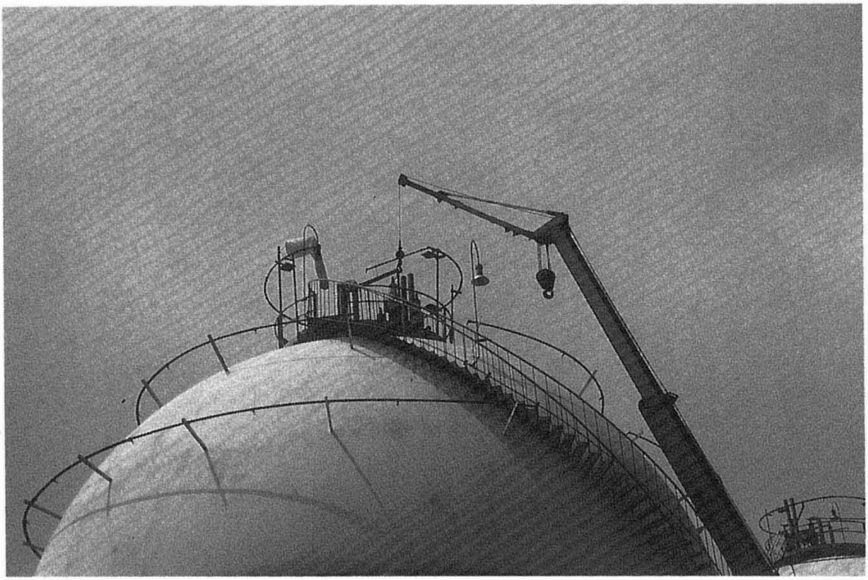

Figure 18 Preparing to remove a safety relief valve from a storage sphere for testing.

Instrument-air manifolds within dehumidified control rooms: every 36 months
Lubricating relief valves on enclosed systems, such as compressors, turbines, and generators: every 36 months

F. Keeping the Safety Relief Valve Records Straight

A simple, sequential numbering system is acceptable for a small plant, such as a batch-chemical-processing facility with only a few dozen SRVs. However, for the Lake Charles plant, a dual numbering system is used to keep up with 2000 SRVs in service and over 600 additional SRVs in storage. The devices kept in storage on-site are used as spares, or can be cannibalized for parts. Spare safety valves for critical equipment must be available [6].

In the dual-numbering system, one number refers to the valve type, and the other refers to its location and service. The first number, identifying the equipment, is unique to the SRV, and is retired once that valve is taken out of service. Equipment records include information on the orifice size, set pressure, manufacturer, model number, serial number, and inlet and outlet flange sizes and ratings.

Test results are entered into the mainframe computer, according to each device's identification number. Employees have "read" access to the records at over 500 terminals and personal computers throughout the complex.

The importance of proper identification of the safety relief valve cannot be overstated. Without a strict-numbering system, the risk of incorrectly joining the wrong SRV to a vessel after testing is complete is increased.

For example, a 1-in. threaded valve can have an effective orifice area of from 0.06 to 0.314 in.^{2} (a fivefold difference), yet both could fit the same installation. Similarly, a 1-in. threaded-type SRV set at 100 psig (690 kPa) may look identical to another valve with the same description, but set at 200 psig (1380 kPa).

Similarly, a 4-in. valve with 300 psi-style flange could be equipped with either an *L* orifice (2.85 in.^{2}) or a *P* orifice (6.38 in.^{2}). The *P* orifice is 2.24 times larger than the *L* orifice.

The location portion of the numbering system indicates the SRVs specific site. Site records include a description of the location, temperature, set pressure, product, and the presence or absence of a rupture disk.

G. Communications to Equipment Owners and Management

Every other month, a computer-generated inspection schedule is sent to the supervisor of each process unit. The form serves as a reminder of all of the SRV and conservation vent locations, recommended service and frequency of inspection, last test date and results (satisfactory, changed, or unsatisfactory), and the correct set pressure, backpressure, operating temperatures, and equipment number of each SRV and conservation vent. This schedule is intended to highlight those valves due for testing.

In addition, brief, statistical SRV test compliance summaries are prepared and these reports are circulated to higher levels of management. These compliance reports list the total number of SRVs in the area and the total number (and total percentage) that are overdue for testing, if any. They serve as a periodic report card, signifying which process areas are in compliance, and which are delinquent [6].

VIII. MECHANICAL INTEGRITY PROGRAM FOR PROCESS SAFETY INTERLOCKS AND ALARMS

Process safety interlocks and alarms can easily be modified by aging or tampering, and these essential components are just too vital to ignore. Each organization must develop an effective way to ensure that process safety systems will function properly when the process demands protection.

Whereas most safety relief valves share many similarities, process safety interlocks are each individually tailored to the unique requirements of the process. The final parts of this chapter will discuss the critical process shutdown systems and the process safety alarms management systems used by three different major chemical plants.

A. Protecting Process Safety Interlocks at a DuPont Plant

The Sabine River Works of the DuPont Company plant in Orange, Texas shared their process interlock classification and test program several years ago at a Chemical Manufacturers Association meeting, and it was later published by the American Institute of Chemical Engineers [26]. This large DuPont' chemical complex employed about 2500 individuals and consists of large single-train processing units. Most of the units are continuous processes for the manufacture of olefins, polyolefins, and chemical intermediates for nylon.

Process materials range from mild-mannered substances, such as water and air, to highly toxic chemicals and very large inventories of hydrocarbons. Process temperatures were reported to range from –180°F (–118°C) to 1000°F (540°C). Process pressures were reported to range between a low vacuum to over 30,000 psig (207 MKa) [26].

The DuPont Sabine River Works has between 35,000 and 40,000 instrument installations and more than 5000 safety interlocks and alarms. The interlocks and alarms are divided into two classifications, which are either an operator aid or a safety interlock alarm.

The *operator aid* is used to alert the operator of a nonhazardous abnormal condition that might otherwise be undetected. The *safety interlock* or *alarm* refers to any equipment for which the proper functioning is essential to prevent or signal hazardous process conditions that may threaten personnel or equipment [26].

DuPont's Sabine River Works experience shows that it is crucial to segregate the more critical interlocks from the others. A few well-understood, respected interlocks are said to be better than an overwhelming number of interlocks with the critical ones scattered among the others. DuPont's system allows a range of required authorizations; for example, a foreman may bypass less critical interlocks, such as lubrication alarms, for up to 24 h for testing and repairs, but some of the more critical alarms may not be bypassed by anyone.

1. Testing Safety Critical Process Instruments at a DuPont Plant

Interlock testing is performed on a periodic basis, usually every 12 months, following detailed written test procedures. The test procedure for each safety interlock defines the actions, including the approval system and the mechanical work required to ensure reliability. These procedures cover the testing activity from the process measurement device to the final element, which is often a control valve [26].

Partly because of the complexity of the instrument systems, there are two first-to-final testing methods. These methods are called actual tests and simulated tests. The *actual test* is performed by operating the process to the trip point, and ensuring that the intermediate relays and instruments properly respond. The *simulated test* is used in circumstances in which the instruments are of a nature that creates a forced shutdown or start-up in a very hazardous process; or the instrument schemes are so complicated that the interlocks cannot be checked on a single-trip shutdown [26].

The technical paper described the interlock-testing program to consist of more than merely verifying that the interlock works. There is also inspection of the interlock equipment for deterioration. The "function test" on instrumentation is required following mechanical work on one or more of the safety system elements. In short, all devices or systems that have been disturbed enough to affect their normal function will be function-tested before being restored to service [26].

B. Another Company: A Different Emphasis on Safety Critical Instrument Systems

Gregory McMillan, formerly an engineering fellow in process control at the Monsanto Chemical Company, and later a consultant, approached the subject differently. His very entertaining presentation entitled, "Can You Say 'Process Interlocks'?" at the 1988 AIChE Loss Prevention Symposium was written as a parody of a popular youngster's television show [27].

Monsanto felt there were some real benefits to be gained by separating the economic issues from the safety issues and focusing on the interlocks that really require special attention. Before this separation, human life was grouped with major property protection and formed a large class for which it was difficult to enforce stringent design and test requirements [27].

In earlier times, costs associated with business interruption (which can exceed property losses after an interlock failure) were largely ignored and those interlocks were often placed with the so-called "operational interlocks." McMillan proposed a system that classified the protection instrument loops into four classes:

100 class I: Community protection (safety) loops
1,000 class II: Employee protection (safety) loops
5,000 class III: Major property and production (economic) loops
100,000 class IV: Minor property and production (economic) loops

The article indicates that alarms and interlocks can proliferate to the point at which they detract from the most critical loops. To be effective, a logical cause-and-effect approach to interlock classification is required. It must be determined which events are the direct and distinct causes of hazardous events.

In the script of this satirical article, Mr. Fellow, the process control engineer, explains that, in the past, interlocks would have been placed on many, but not all, of the indirect causes of a release. In his example, a steam-heated chlorine vaporizer would have only two direct chemical process causes of a release. These direct causes are high pressure, which can open a relief device, or high temperature. The high temperature can also accelerate corrosion.

In the past, this company's process control design would have placed interlocks on many of the indirect causes of releases. The indirect causes include a wide-open steam control valve, a closed chlorine gas valve downstream from the vaporizer, or a wide-open upstream nitrogen regulator. Unfortunately, with the large number of interlocks with similar test requirements, there was insufficient time and money to assure the integrity of all of the interlocks.

McMillan suggests that the most direct and distinct cause for a potential release from this steam-heated chlorine vaporizer is high pressure, and high temperature is the second most likely cause. Thus, the high-pressure and high-temperature interlocks should receive the most severe classification and the most testing attention.

The author points out statistics indicating that 80% of all interlock failures are due to failures of the field device. Those statistics show that 45% of the interlock failures are measurement device failures, and the other 35% are caused by valve or valve actuator failures [27].

C. Another Approach to Proof-Testing in Louisiana

At PPG Industries, Lake Charles, Louisiana, there are numerous instrument loops that provide critical safety, alarm, and shutdown functions. These protective instruments are located on reactors, oil heaters, incinerators, cracking furnaces, compressors, steam-heated vaporizers, kettles, distillation columns, and boilers. There are also process analyzers and flammable vapor detectors providing process safety [6].

Instrument loops serving the equipment just described can function in either an on-line or a standby manner; both types can fail. Failure of an on-line loop, such as a failure of level control valve, becomes known rather quickly, when the operation deviates either gradually or drastically from the norm. Depending on the type of failure, this may place a demand on the standby loop.

However, failure of a standby instrument loop, such as an alarm or safety interlock, will not become evident until a demand is placed on it to function. Problems developing in these loops must be discovered by periodic proof-testing.

A proof-test program cannot be left to someone's memory. It must follow a well-structured format to accomplish the essential steps, regardless of the myriad of other activities and distractions that tend to absorb all the supervisors' and mechanics' time [6] (Figs. 19 and 20).

1. What Instruments Are Considered Critical?

When PPG Lake Charles first initiated its proof-test program, efforts to classify which safety devices were truly "critical" were not specific enough. Hence, the original program allowed too many instruments into the test system, which created a top-heavy burden. To prevent this from happening, the following information should be developed for critical loops [6]:

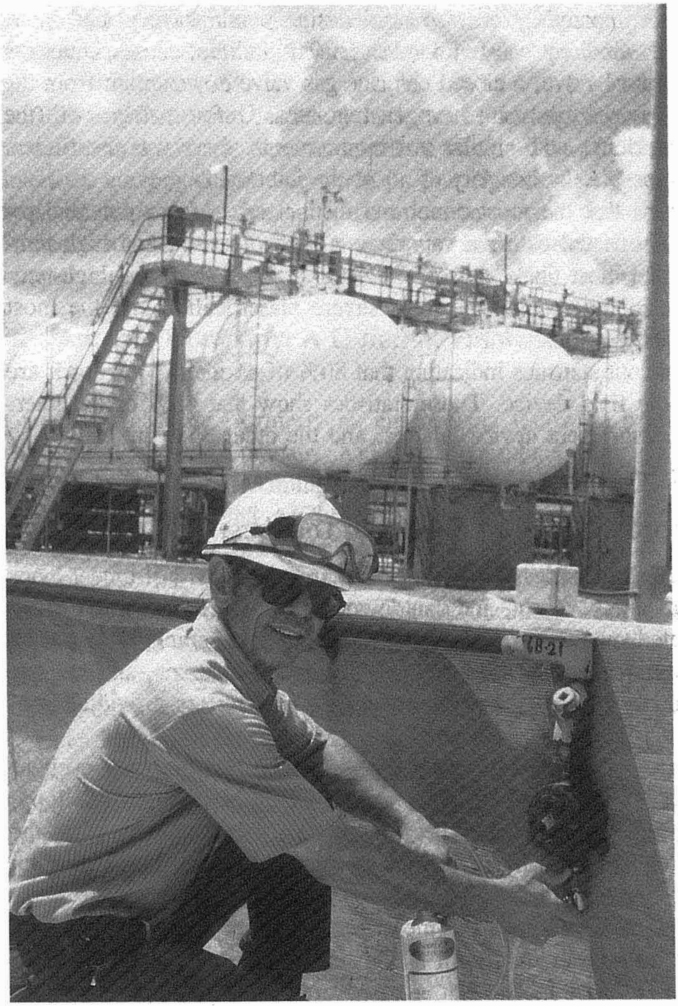

Figure 19 Proof testing a flammable gas detector in a tank farm.

a. A listing of critical alarms and safety interlocks essential to safe plant operations
b. Criteria by which the truly "critical instrument" system can be characterized as such, and discerned from other important (but not critical) systems

The test procedure for complex interlocks should be developed with engineering help and, for consistency and compliance with OSHA 1910.119, should be documented in writing. Any proposed additions or deletions should be screened by

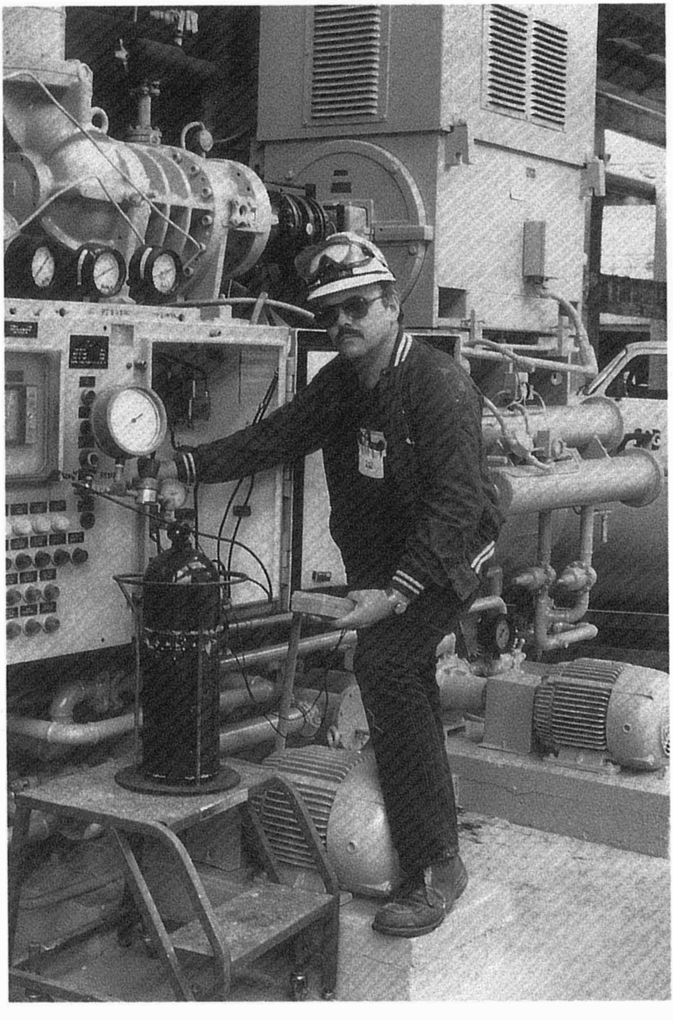

Figure 20 Proof testing a high-pressure switch on a refrigeration unit.

a third-party group or committee. An appropriate authorization path—through which changes in shutdown setpoints and instrument values can be made in a systematic way and on the record—should be in place.

Test results must be recorded systematically, and must be easily accessible to all who need them for analysis. Defective or worn components should be identified and repaired immediately.

Management must take an active role in the stewardship of this program. High levels of compliance with stringent test schedules should be urged and rewarded.

It takes years to develop and fine-tune a proof-test program. Time is required to identify all of the instrument loops that need to be included, and more time is needed to systematically collect or develop data sheets containing basic operational information for each device or loop.

During the development stage, test methods need to be defined, and the appropriate personnel responsible for testing must be identified and trained. Finally, test frequencies must be decided.

The Lake Charles facility has over 2800 loops in its proof-test program. In many cases, the test frequency is determined by fault-tree engineering studies. Critical instrument loops appear on a proof-test schedule, which is distributed monthly to the operations and maintenance departments [6].

2. Prioritizing Critical Loops

Some process safety instrument loops are more critical than others, hence PPG Lake Charles, assigned priorities:

(*a*) *Priority 1.* Critical instruments the failure of which would either cause, or fail to inform of, situations resulting in accidental fire, explosion, uncontrolled release of dangerous materials, reportable environmental releases, or major property or production loss. The alarms assigned a priority 1 include those that have been mandated as such by outside agencies, an in-house technical safety review committee, HAZOP studies, and specific alarms deemed critical by operations supervisors. All of these alarms are on a regular proof-testing schedule [6].

The Lake Charles facility has over 1400 priority 1 safety instrumentation loops. These include alarms and trips on storage tanks containing flammable or toxic liquids, devices to control high temperature and high pressure on exothermic-reaction vessels, and control mechanisms for low-flow, high-temperature fluids on fired heaters. Other priority 1 instruments include alarms that warn of flame failure on fired heaters, and vapor detectors for emergency valve isolation and sprinkler system activation (Figs. 21 and 22).

(*b*) *Priority 2.* Critical instruments the failure of which could cause, or fail to inform of, serious conditions involving environmental releases, property or production losses, or other non—life-threatening situations are included in the priority 2 classification. These alarms are given a slightly lower priority, but are also proof-tested on a regular schedule.

There are over 1400 priority 2 alarms at PPG Lake Charles. Examples include those alarms or trips on refrigeration compressors, rectifiers, cooling towers, kettles, and stills, and those controlling power and instrument air.

(*c*) *Priority 3.* All other alarms that assist operations, but are *not* considered critical devices are not on a regular proof-testing schedule.

3. Proof-Test Frequencies

Assigning proof-test frequencies for complex, safety instrumentation loops requires "sound engineering judgment" for simple systems. For more complex interlock

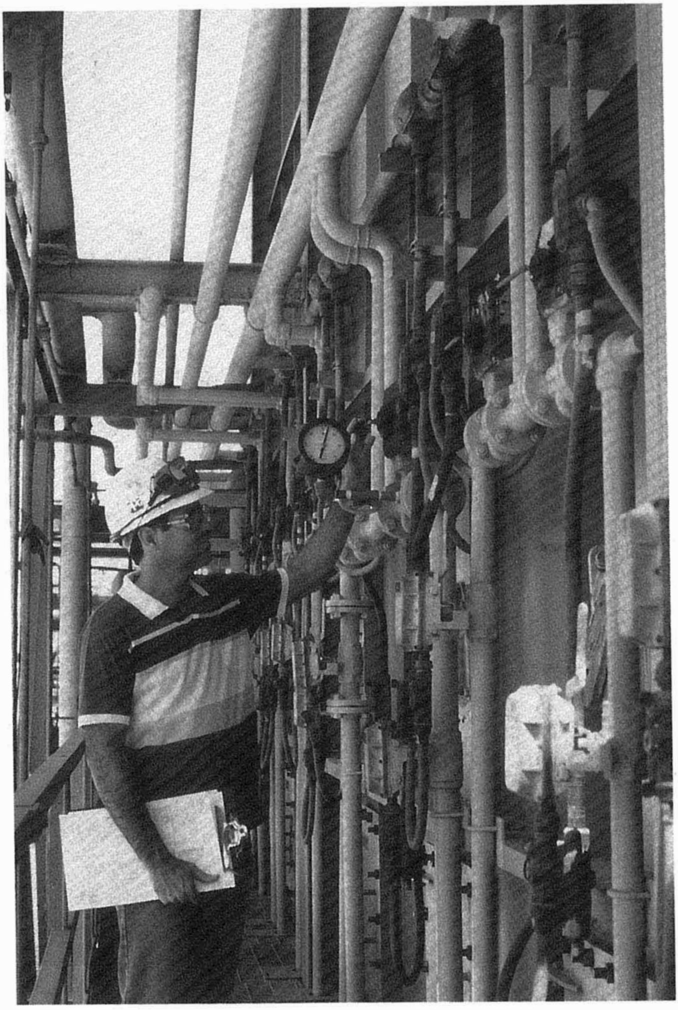

Figure 21 A chemical process operator relies on a furnace fuel shutdown system.

systems, the frequency is a function of the tolerable hazard rates. For example, DuPont Sabine River Works (Orange, Texas) has 35,000 instruments in service. Every safety interlock is tested on a periodic basis, usually every 12 months, following a detailed written test procedure [25].

Once a test frequency is established by DuPont for a particular interlock, a significant review and multiple approvals are required to permanently remove the interlock or change its test frequency.

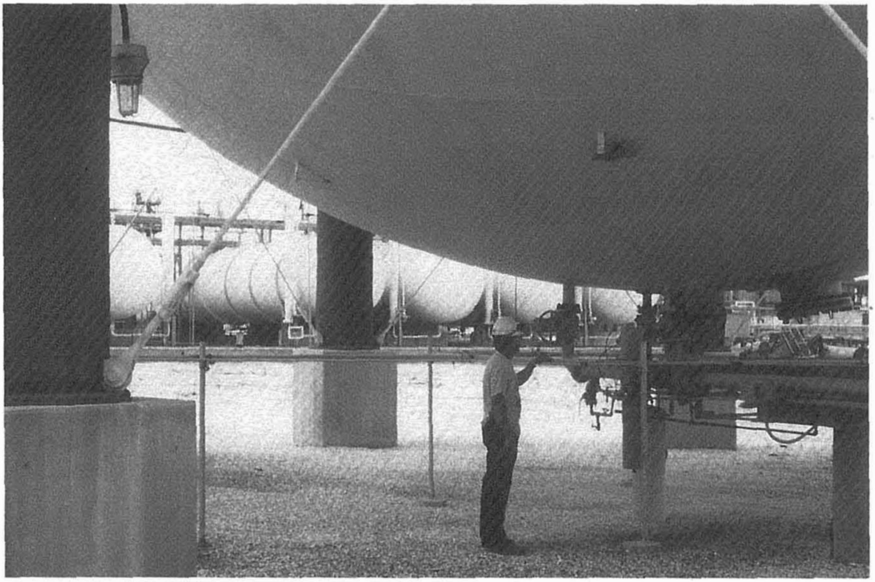

Figure 22 A chemical process operator witnesses the testing of an "emergency isolation valve" below a sphere of hazardous product.

Many of PPG's high-pressure and high-temperature alarms are tested every 6 months. About half of the PPG Lake Charles complex test frequencies have been developed using detailed reliability studies that consider the *hazard rate* (the acceptable probability of a process accident) and the *demand rate* (the number of times the critical alarm or shutdown function is required in service) [6].

Within PPG's chlorinated hydrocarbon complex—which comprises a major portion of the Lake Charles facility, and produces eight different product lines—26% of the loops are on a 1-year test frequency; 42% are on a 6-month frequency; 15% are tested every 4 months; 11% every 3 months; and the remaining 6% at various other frequencies from weekly to every 2 years.

4. Administering the Critical Instrument Proof Test Program

The PPG Lake Charles' schedules for testing complex safety loops are distributed monthly in a packet to area supervisors. The packet includes a form listing the loops due in the current month (as well as those past due), the test frequency, and the authority requesting the test [6].

Six independent groups of technical personnel provide proof-testing services. Proof-testing is performed by electricians, critical-metering mechanics, refrigeration mechanics, analyzer repair technicians, instrument maintenance personnel, and area instrument mechanics (Fig. 23).

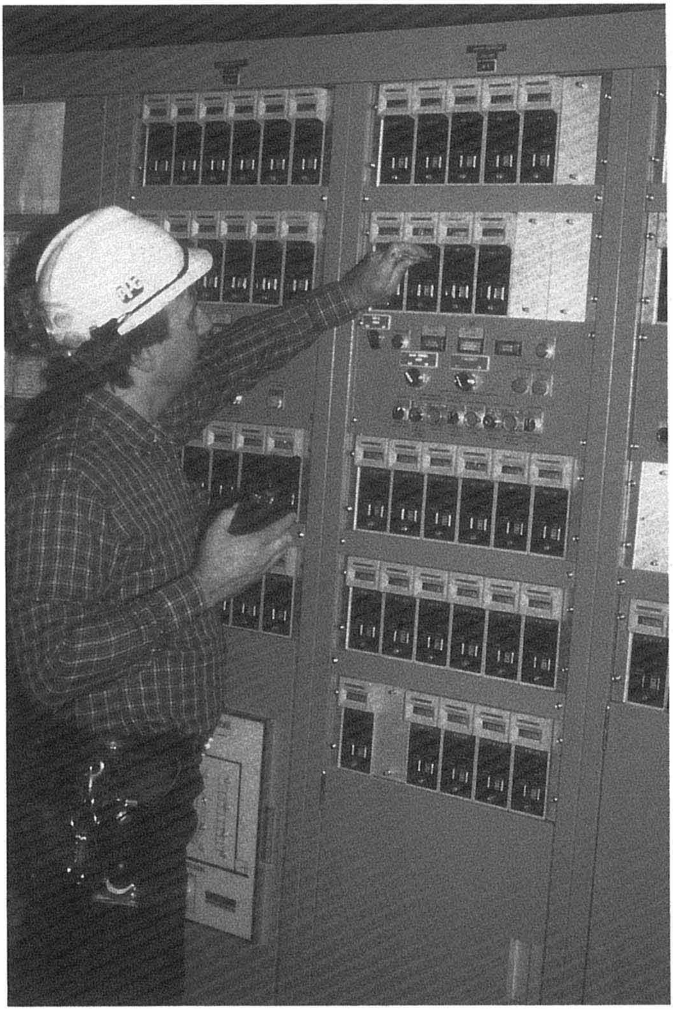

Figure 23 An instrument repairman proof tests a critical instrument panel.

Once a loop has been proof tested, the results are entered into the mainframe computer, along with the date tested and the condition found. All employees have "read" access to this data on many terminals throughout the complex, but only authorized personnel have access to the actual database. Keeping track of other aspects of the system is also done on the computer. For example, if a setpoint on a particular instrument needs changing, the request and approval (both approved by the area supervisor) are done at the computer terminal. Loops that are no longer in service can be deleted by the authorized personnel. New loops can be added by an individual designated by the technical safety committee, who reviews all new and modified installations.

Finally, monthly compliance reports are issued to top plant management. Particularly critical to the success of the program is management's full support and commitment to compliance with process safety administration [6].

IX. ADDITIONAL INFORMATION ON MECHANICAL INTEGRITY

The Center for Chemical Process Safety (CCPS), a section of the American Institute of Chemical Engineers, has recently released a new "how to . . ." book [28] that contains practical appendices on inspection and test procedures. These appendices are practices at major chemical manufacturing facilities: Chapter 8 should be consulted for specific information and actual plant programs.

Appendix 8-B of the CCPS book is entitled "Example of Test and Inspection Equipment and Procedures." This appendix covers minimum testing and inspection requirements of all classified equipment. *Classified* equipment is equipment identified in operational safety standards and governmental regulations.

Appendix 8-C is called "Example of Field Inspection and Testing of Process Safety Systems." Appendix 8-E is named "Example of Criteria for Test and Inspection of Safety," and in 17 pages, it covers safety relief valves, rupture disks, control loop and manual-actuated emergency vent devices, and explosion vents. These AIChE guidelines should be consulted if the reader is building or improving a mechanical integrity program.

REFERENCES

1. U. S. Department of Labor, *Process Safety Management of Highly Hazardous Chemicals; Explosives and Blasting Agents; Final Rule*, OSHA Part 1910.119, U. S. Dept. of Labor, Occupational Safety, and Health Standards, Washington, DC, *Federal Register*. Feb. 24, 1992.
2. U. S. Department of Labor, OSHA Instruction CPL 2- 2.45A *Process Safety Management of Highly Hazardous Chemicals—Compliance Guidelines and Enforcement Procedures (Advance Copy)*, U. S. Dept of Labor, OSHA, Washington, DC, Sept. 28, 1992, pp. A-33–A-38.
3. Arthur D. Little, Inc. and R. LeVine, *Safe Storage and Handling of High Toxic Hazard Materials*, Center for Chemical Process Safety, AIChE, New York, 1988, Chap. 4.
4. U. S. Department of Labor, *Process Safety Management of Highly Hazardous Chemicals; Explosives and Blasting Agents; Final Rule*, OSHA Part 1910.119, U. S. Dept. of Labor, Occupational Safety and Health Standards, Washington, DC, *Federal Register*, Feb. 24, 1992, p. 6414.
5. Chemical Manufacturers Association, Responsible care is template for taking effective action, *CMA News*, 18, (9):11–12 (1990).

6. R. E. Sanders, and J. H. Wood, Don't leave plant safety to chance, *Chem. Eng.*, Feb:110—118 (1991).
7. J. A. Hawkins, Improving equipment reliability though vibration analysis, *Vibrations* 8(2):1992.
8. R. W. LeBlanc, Loss prevention through machinery vibration surveillance and analysis, *Plant Operation Prog.*, 5:179–182 (1985).
9. G. Samdani, G. Ondrey, and S. Moore, Predictive maintenance, *Chem. Eng.*, 99(11):30–33 (1992).
10. C. M. Boyles, The plant services survey: What does it say, *Plant Serv.*, 13(10):139–140 (1992).
11. Improving maintenance with infrared, *Maintenance Technol.*, Nov. (1989).
12. R. E. Sanders, *Management of Change in Chemical Plants: Learning from Case Histories*, Butterworth-Heinemann, Oxford, UK, 1993, Chap. 8.
13. A. S. Krisher, Plant integrity programs, *Chem. Eng. Prog.*, May: 21 (1987).
14. National Association of Corrosion Engineers (NACE), Publication 6H189, *A State-of-the-Art Report of Protective Coatings for Carbon Steel and Autenitic Stainless Steel Surfaces Under Thermal and Cementitious Fire Proofing*, Technical report NACE Task Groups 7-H-31*, 1989.
15. American Petroleum Institute (API), *API 570, Piping Inspection Code: Inspection, Repair, Alteration and Rerating of In-Service Piping Systems*, 1st ed., draft 8, API, Washington, DC, 1992, p. 28.
16. American Petroleum Institute (API), *API 510, Pressure Vessel Inspection Code: Maintenance Inspection, Rating, Repair, and Alteration*, 6th ed., API, Washington, DC, 1989.
17. American Petroleum Institute (API), *API 653, Tank Inspection, Repair, Alteration, and Reconstruction*, API, Washington, DC, 1991.
18. W. H. Mueller, C. G. Arnold, and B. W. Ross, *Reducing Risks Through a Pressure Vessel Management Program*, AIChE Loss Prevention Symposium, New Orleans, April 1986.
19. American Petroleum Institute (API), *API 574, Inspection of Piping, Tubing, Valves, and Fittings*, API, Washington, DC, 1990.
20. National Petroleum Refiners Association (NPRA), *The Exchanger, Maintenance Information for the Hydrocarbon Processing Industry*, NPRA, Washington, DC, 1990.
21. Institute of Chemical Engineers (IChE), *Safer Piping: Awareness Training for the Process Industries*, Hazard Workshop Modules, Module 12 (Available as a training video, slides, a teaching guide, etc.), IChE, Rugby, UK, 1987.
22. N. Braun, Silent sentinels: Lessons on pressure relief valve performance, *Valve Magazine*, Spring:28 (1989).
23. B. A. Van Boskirk, Don't let your plant blow up-an overview of the elements of overpressure protection, Presented at the joint meeting of the Southeast Texas Section of the AIChE and the Sabine—Neches Section of the ACS, Apr., 1986.
24. R. E. Sanders, and W. H. Woolfolk, Process safety relief valve testing, *Chem. Eng. Prog.*, Mar:60–64 (1984).
25. R. E. Sanders, and W. H. Woolfolk, Dynamic testing and maintenance of safety relief valves, *Chem. Eng.*, Oct. 26:119–124 (1987).

26. D. A. Barclay, Protecting process safety interlocks, *Chem. Eng. Prog.*, Feb:20–24 (1988).
27. G. K. McMillan, Can you say “process interlocks”? *In Tech J.*, May:35–44 (1987). Also presented at the AIChE Loss Prevention Symposium, New Orleans, March 1988.
28. *Plant Guidelines for Technical Management of Chemical Process Safety*, The Center for Chemical Process Safety of the AIChE, New York, 1992, Chap. 8.

Index