ELECTRIC POWER SUBSTATIONS ENGINEERING

Edited by

John D. McDonald

CRC PRESS

ELECTRIC POWER SUBSTATIONS ENGINEERING

© 2003 by CRC Press LLC

The ELECTRIC POWER ENGINEERING Series
Series Editor Leo L. Grigsby

Published Titles

Computational Methods for Electric Power Systems
Mariesa Crow

Distribution System Modeling and Analysis
William H. Kersting

Electric Drives
Ion Boldea and Syed Nasar

Electric Power Substations Engineering
John D. McDonald

Electrical Energy Systems
Mohamed E. El-Hawary

Electromechanical Systems, Electric Machines, and Applied Mechatronics
Sergey E. Lyshevski

The Induction Machine Handbook
Ion Boldea and Syed Nasar

Linear Synchronous Motors: Transportation and Automation Systems
Jacek Gieras and Jerry Piech

Power Quality
C. Sankaran

Power System Operations and Electricity Markets
Fred I. Denny and David E. Dismukes

Forthcoming Titles

Electric Power Distribution Handbook
Tom Short

Electric Power Transformer Engineering
James H. Harlow

© 2003 by CRC Press LLC

ELECTRIC POWER SUBSTATIONS ENGINEERING

Edited by

John D. McDonald

CRC PRESS

Boca Raton London New York Washington, D.C.

© 2003 by CRC Press LLC

The material from this book was first published in *The Electric Power Engineering Handbook,* Grigsby, L.L., Ed., CRC Press, Boca Raton, FL, 2001.

Library of Congress Cataloging-in-Publication Data

Electric power substations engineering / edited by John D. McDonald.
p. cm. — (Electric power engineering series ; 8)
ISBN 0-8493-1703-7 (alk. paper)
1. Electric substations. I. McDonald, John D. (John David), 1951- II. Series.

TK1751.E44 2003
621.31—dc21 2003043993

This book contains information obtained from authentic and highly regarded sources. Reprinted material is quoted with permission, and sources are indicated. A wide variety of references are listed. Reasonable efforts have been made to publish reliable data and information, but the authors and the publisher cannot assume responsibility for the validity of all materials or for the consequences of their use.

Neither this book nor any part may be reproduced or transmitted in any form or by any means, electronic or mechanical, including photocopying, microfilming, and recording, or by any information storage or retrieval system, without prior permission in writing from the publisher.

All rights reserved. Authorization to photocopy items for internal or personal use, or the personal or internal use of specific clients, may be granted by CRC Press LLC, provided that $1.50 per page photocopied is paid directly to Copyright Clearance Center, 222 Rosewood Drive, Danvers, MA 01923 USA The fee code for users of the Transactional Reporting Service is ISBN 0-8493-1703-7/03/$0.00+$1.50. The fee is subject to change without notice. For organizations that have been granted a photocopy license by the CCC, a separate system of payment has been arranged.

The consent of CRC Press LLC does not extend to copying for general distribution, for promotion, for creating new works, or for resale. Specific permission must be obtained in writing from CRC Press LLC for such copying.

Direct all inquiries to CRC Press LLC, 2000 N.W. Corporate Blvd., Boca Raton, Florida 33431.

Trademark Notice: Product or corporate names may be trademarks or registered trademarks, and are used only for identification and explanation, without intent to infringe.

Visit the CRC Press Web site at www.crcpress.com

© 2003 by CRC Press LLC

No claim to original U.S. Government works
International Standard Book Number 0-8493-1703-7
Library of Congress Card Number 2003043993
Printed in the United States of America 1 2 3 4 5 6 7 8 9 0
Printed on acid-free paper

© 2003 by CRC Press LLC

Preface

The electric power substation, whether generating station or transmission and distribution, remains one of the most challenging and exciting fields of electric power engineering. Recent technological developments have had tremendous impact on all aspects of substation design and operation. The objective of *Electric Power Substations Engineering* is to provide an extensive overview of the substation, as well as a reference and guide for its study. The chapters are written for the electric power engineering professional to give detailed design information, as well as for other engineering professions (e.g., mechanical, civil) who want an overview or specific information in one particular area.

The book is organized into 18 chapters to provide comprehensive information on all aspects of substations, from the initial concept of a substation to design, automation, operation, and physical and cyber security. The chapters are written as tutorials, and most provide references for further reading and study. The chapter authors are members of the Institute of Electrical and Electronics Engineers (IEEE) Power Engineering Society (PES) Substations Committee, the group that develops the standards that govern all aspects of substations. Consequently, this book contains the most recent technological developments regarding industry practice as well as industry standards. This work is a member of the Electric Power Engineering Series published by CRC Press.

During my review of the individual chapters of this book, I was very pleased with the level of detail presented and, more importantly, the tutorial writing style and use of photographs and graphics to help the reader understand the material. I thank the tremendous efforts of the 25 authors who were dedicated to do the very best job they could in writing the 18 chapters. I also thank the personnel at CRC Press who have been involved in the production of this book, with a special word of thanks to Nora Konopka, Helena Redshaw, and Michele Berman. They were a pleasure to work with and made this project a lot of fun for all of us.

John D. McDonald
Editor-in-Chief

© 2003 by CRC Press LLC

Editor-in-Chief

John D. McDonald, P.E., is senior principal consultant and manager of automation, reliability, and asset management for KEMA, Inc. In his over 29 years of experience in the electric utility industry, McDonald has developed power application software for both supervisory control and data acquisition (SCADA) energy management system (EMS) and SCADA distribution management system (DMS) applications, developed distribution automation and load management systems, managed SCADA/EMS and SCADA/DMS projects, and assisted intelligent electronic device (IED) suppliers in the automation of their IEDs. He is currently assisting electric utilities in substation automation, distribution SCADA, communication protocols, and SCADA/DMS. McDonald received his B.S.E.E. and M.S.E.E. (power engineering) degrees from Purdue University, and an M.B.A. (finance) degree from the University of California-Berkeley. He is a member of Eta Kappa Nu and Tau Beta Pi, is a Fellow of IEEE, and was awarded the IEEE Millennium Medal in 2000, the IEEE PES Award for Excellence in Power Distribution Engineering in 2002, and the IEEE PES Substations Committee Distinguished Service Award in 2003. In his 17 years of working group and subcommittee leadership with the IEEE PES Substations Committee, he has led 7 working groups and task forces that published standards/tutorials in the areas of distribution SCADA, master/remote terminal unit (RTU), and RTU/IED communications. He is secretary of the IEEE PES, covice chair of IEEE Standards Coordinating Committee (SCC) 36, corresponding member to IEC Technical Committee (TC) 57 Working Group (WG) 11, and the past chair of the IEEE PES Substations Committee. McDonald is a member of the advisory committee for the annual DistribuTECH Conference and the editorial board for the IEEE *Power & Energy* magazine, and he is a charter member of *T&D World* magazine's international editorial advisory board. The editor teaches a SCADA/EMS/DMS course at the Georgia Institute of Technology, a substation automation course at Iowa State University, and substation automation, distribution SCADA, and communications courses for the American Public Power Association and for various IEEE PES local chapters as an IEEE PES distinguished lecturer. McDonald has published 21 papers in the areas of SCADA, EMS, DMS, and communications, and is a registered professional engineer (electrical) in California, Pennsylvania, and Georgia. He is coauthor of the book, *Automating a Distribution Cooperative, from A to Z*, published by the National Rural Electric Cooperative Association Cooperative Research Network (CRN) in 1999. He edited the Substations Integration and Automation chapter, and authored the Substation Automation article for the book, *Electric Power Engineering Handbook*, cosponsored by the IEEE PES and published by CRC Press in 2000.

© 2003 by CRC Press LLC

Contributors

Michael J. Bio
E.P. Breaux Electrical, Inc.
Birmingham, Alabama

Philip Bolin
Mitsubishi Electric Power
Warrendale, Pennsylvania

James C. Burke
Baltimore Gas and
Electric Company
Baltimore, Maryland

Don Delcourt
BC Hydro
Burnaby, British Columbia
Canada

Martin Delson
KEMA, Inc.
Oakland, California

James W. Evans
The St. Claire Group
Grosse Pointe Farms, Michigan

Sheila Frasier
Southern Engineering
Atlanta, Georgia

Rulon Fronk
Consultant
Cerritos, California

David L. Harris
Waukesha Electric Systems
New Berlin, Wisconsin

Gerhard Juette
Siemens AG (retired)
Munich, Germany

Tonia Jurbin
BC Hydro
Burnaby, British Columbia
Canada

Richard P. Keil
Commonwealth Associates, Inc.
Dayton, Ohio

Tibor Kertesz
Hydro One Networks Inc.
Toronto, Ontario
Canada

Hermann Koch
Siemens
Erlangen, Germany

John D. McDonald
KEMA, Inc.
Duluth, Georgia

Asok Mukherjee
Siemens AG
Erlangen, Germany

Daniel E. Nordell
Consulting Engineer
Minneapolis, Minnesota

Robert S. Nowell
Georgia Power Company
Atlanta, Georgia

John Oglevie
Power Engineers
Boise, Idaho

Pat Rooney
Rooney Protective Consulting
Group
Carney, Maryland

Anne-Marie Sahazizian
Hydro One Networks Inc.
Toronto, Ontario
Canada

James H. Sosinski
Consumers Energy
Jackson, Michigan

R.P. Stewart
BC Hydro
Burnaby, British Columbia
Canada

C.M. Mike Stine
Tyco Electronics-Energy Division
Tracy, California

Joseph Weiss
KEMA, Inc.
Cupertino, California

© 2003 by CRC Press LLC

Contents

1 How a Substation Happens *James C. Burke and Anne-Marie Sahazizian*
1.1 Background 1-1
1.2 Needs Determination 1-2
1.3 Budgeting 1-2
1.4 Financing 1-2
1.5 Traditional and Innovative Substation Design 1-2
1.6 Site Acquisition 1-3
1.7 Design, Construction, and Commissioning Process 1-3

2 Gas-Insulated Substations *Philip Bolin*
2.1 SF_6 2-1
2.2 Construction and Service Life 2-2
2.3 Economics of GIS 2-17

3 Air-Insulated Substations — Bus/Switching Configurations *Michael J. Bio*
3.1 Single Bus (Figure 3.1) 3-1
3.2 Double Bus, Double Breaker (Figure 3.2) 3-2
3.3 Main and Transfer Bus (Figure 3.3) 3-2
3.4 Double Bus, Single Breaker (Figure 3.4) 3-3
3.5 Ring Bus (Figure 3.5) 3-4
3.6 Breaker-and-a-Half (Figure 3.6) 3-5
3.7 Comparison of Configurations 3-5

4 High-Voltage Switching Equipment *David L. Harris*
4.1 Ambient Conditions 4-1
4.2 Disconnect Switches 4-1
4.3 Load Break Switches 4-2
4.4 High-Speed Grounding Switches 4-2
4.5 Power Fuses 4-3
4.6 Circuit Switchers 4-3
4.7 Circuit Breakers 4-4
4.8 GIS Substations 4-6
4.9 Environmental Concerns 4-6

© 2003 by CRC Press LLC

5 High-Voltage Power Electronic Substations *Gerhard Juette and Asok Mukherjee*
5.1 Converter Stations (HVDC) 5-2
5.2 FACTS Controllers 5-5
5.3 Control and Protection System 5-10
5.4 Losses and Cooling 5-16
5.5 Civil Works 5-16
5.6 Reliability and Availability 5-17
5.7 Future Trends 5-18

6 The Interface between Automation and the Substation *James W. Evans*
6.1 Introduction 6-1
6.2 Physical Considerations 6-2
6.3 Analog Data Acquisition 6-4
6.4 Status Monitoring 6-10
6.5 Control Functions 6-11
6.6 Communications Networks inside the Substation 6-14
6.7 Testing Automation Systems 6-17
6.8 Summary 6-20

7 Substation Integration and Automation *John D. McDonald*
7.1 Introduction 7-1
7.2 Definitions and Terminology 7-2
7.3 Open Systems 7-2
7.4 Architecture Functional Data Paths 7-3
7.5 Substation Integration and Automation System Functional Architecture 7-3
7.6 New vs. Existing Substations 7-3
7.7 Equipment Condition Monitoring 7-4
7.8 Substation Integration and Automation Technical Issues 7-5
7.9 Protocol Fundamentals 7-13
7.10 Protocol Considerations 7-14
7.11 Choosing the Right Protocol 7-17
7.12 Communication Protocol Application Areas 7-17
7.13 Summary 7-18

8 Oil Containment *Anne-Marie Sahazizian and Tibor Kertesz*
8.1 Oil-Filled Equipment in Substation [IEEE 980-1994 (R2001)] 8-2
8.2 Spill Risk Assessment 8-3
8.3 Containment Selection Consideration [IEEE 980-1994 (R2001)] 8-4
8.4 Oil Spill Prevention Techniques 8-5

© 2003 by CRC Press LLC

9 Community Considerations *James H. Sosinski*
9.1 Community Acceptance 9-1
9.2 Planning Strategies and Design 9-2
9.3 Permitting Process 9-10
9.4 Construction 9-11
9.5 Operations 9-12
9.6 Defining Terms (IEEE, 1998) 9-13

10 Animal Deterrents/Security *C.M. Mike Stine and Sheila Frasier*
10.1 Animal Types 10-2
10.2 Mitigation Methods 10-3

11 Substation Grounding *Richard P. Keil*
11.1 Reasons for Substation Grounding System 11-1
11.2 Accidental Ground Circuit 11-2
11.3 Design Criteria 11-8

12 Grounding and Lightning *Robert S. Nowell*
12.1 Lightning Stroke Protection 12-1
12.2 Lightning Parameters 12-2
12.3 Empirical Design Methods 12-5
12.4 The Electrogeometric Model (EGM) 12-7
12.5 Calculation of Failure Probability 12-18
12.6 Active Lightning Terminals 12-20

13 Seismic Considerations *R.P. Stewart, Rulon Fronk, and Tonia Jurbin*
13.1 Historical Perspective 13-1
13.2 IEEE 693 — a Solution 13-1
13.3 Relationship between Earthquakes and Substations 13-2
13.4 Applicable Documents 13-2
13.5 Decision Process for Seismic Design Considerations 13-3
13.6 Performance Levels and Required Spectra 13-3
13.7 Qualification Process 13-10

14 Substation Fire Protection *Don Delcourt*
14.1 Fire Hazards 14-1
14.2 Fire Protection Measures 14-4
14.3 Fire Protection Selection 14-5
14.4 Conclusion 14-7
Substation Control Building Fire-Protection-Review Checklist 14-8
Substation Switchyard Fire Protection Assessment Process 14-9

© 2003 by CRC Press LLC

15 Substation Communications *Daniel E. Nordell*
15.1 Introduction **15**-1
15.2 Supervisory Control and Data Acquisition (SCADA) Historical Perspective **15**-2
15.3 SCADA Functional Requirements **15**-4
15.4 SCADA Communication Requirements **15**-4
15.5 Components of a SCADA System **15**-5
15.6 SCADA Communication Protocols: Past, Present, and Future **15**-6
15.7 The Structure of a SCADA Communications Protocol **15**-9
15.8 Security for Substation Communications **15**-11
15.9 Electromagnetic Environment **15**-14
15.10 Communications Media **15**-15
15.11 Additional Information **15**-22

16 Physical Security *John Oglevie and Pat Rooney*
16.1 Introduction **16**-1
16.2 History **16**-2
16.3 Types of Intruders **16**-3
16.4 Substation Development **16**-4
16.5 Security Methods **16**-5
16.6 Security Assessment **16**-11

17 Cyber Security of Substation Control and Diagnostic Systems *Joseph Weiss and Martin Delson*
17.1 Introduction **17**-1
17.2 Definitions and Terminology **17**-2
17.3 Threats to the Security of Substation Systems **17**-3
17.4 Substation Automation (SA) System Vulnerabilities **17**-4
17.5 Measures to Enhance Cyber Security **17**-6
17.6 Devising a Security Policy **17**-11
17.7 Future Measures **17**-12

18 Gas-Insulated Transmission Line (GIL) *Hermann Koch*
18.1 Introduction **18**-1
18.2 History **18**-2
18.3 System Design **18**-3
18.4 Development and Prototypes **18**-9
18.5 Advantages of GIL **18**-21
18.6 Application of Second-Generation GIL **18**-25
18.7 Quality Control and Diagnostic Tools **18**-27
18.8 Corrosion Protection **18**-28
18.9 Voltage Stress Coming from the Electric Power Net **18**-30
18.10 Future Needs of High-Power Interconnections **18**-32

© 2003 by CRC Press LLC

1

How a Substation Happens

James C. Burke
Baltimore Gas and Electric Company

Anne-Marie Sahazizian
Hydro One Networks Inc.

1.1 Background 1-1
1.2 Needs Determination 1-2
1.3 Budgeting 1-2
1.4 Financing 1-2
1.5 Traditional and Innovative Substation Design 1-2
1.6 Site Acquisition 1-3
1.7 Design, Construction, and Commissioning Process 1-3
Station Design • Station Construction • Station Commissioning
References 1-5

1.1 Background

The construction of new substations and the expansion of existing facilities are commonplace projects in electric utilities. However, due to the complexity, very few utility employees are familiar with the complete process that allows these projects to be successfully completed. This chapter will attempt to highlight the major issues associated with these capital-intensive construction projects, and provide a basic understanding of the types of issues that must be addressed during this process.

There are four major types of electric substations. The first type is the switchyard at a generating station. These facilities connect the generators to the utility grid and also provide off-site power to the plant. Generator switchyards tend to be large installations that are typically engineered and constructed by the power plant designers and are subject to planning, finance, and construction efforts different from those of routine substation projects. Because of their special nature, the creation of power plant switchyards will not be discussed here, but the expansion and modification of these facilities generally follow the routine processes.

Another type of substation is typically known as the customer substation. This type of substation functions as the main source of electric power supply for one particular business customer. The technical requirements and the business case for this type of facility depend highly on the customer's requirements, more so than on utility needs, so this type of station will also not be the primary focus of this discussion.

The third type of substation involves the transfer of bulk power across the network and is referred to as a switching station. These large stations typically serve as the end points for transmission lines originating from generating switchyards, and they provide the electrical power for circuits that feed distribution stations. They are integral to the long-term reliability and integrity of the electric system and enable large blocks of energy to be moved from the generators to the load centers. Since these switching stations are strategic facilities and usually very expensive to construct and maintain, these substations will be one of the major focuses of this chapter.

The fourth type of substation is the distribution substation. These are the most common facilities in electric power systems and provide the distribution circuits that directly supply most electric customers.

0-8493-1703-7/03/$0.00+$1.50
© 2003 by CRC Press LLC

© 2003 by CRC Press LLC

They are typically located close to the load centers, meaning that they are usually located in or near the neighborhoods that they supply, and are the stations most likely to be encountered by the customers. Since the construction of distribution stations creates the majority of projects in utility substation construction budgets, these facilities will be the other major focus of this chapter.

1.2 Needs Determination

An active planning process is necessary to develop the business case for creating a substation or making major modifications. Planners, operating and maintenance personnel, asset managers, and design engineers are among the various employees typically involved in considering such issues in substation design as load growth, system stability, system reliability, and system capacity, and their evaluations determine the need for new or improved substation facilities. Customer requirements, such as a new factory, etc., should be considered as well as customer relations and complaints. In some instances, political factors also influence this process, such as when reliability is a major issue. At this stage, the elements of the surrounding area are defined and assessed, and a required in-service date is established. The planning process produces a basic outline of what is required in what area.

1.3 Budgeting

Having established the broad requirements for the new station — such as voltages, capacity, number of feeders, etc. — the issue of funding must be addressed. This is typically when real estate investigations of available sites begin, since site size and location can significantly affect the cost of the facility. Preliminary equipment layouts and engineering evaluations are also undertaken at this stage in order to develop ballpark costs, which then have to be evaluated in the corporate budgetary justification system. Preliminary manpower forecasts for all disciplines involved in the engineering and construction of the substation should be undertaken, including identification of the nature and extent of any work that the utility may need to contract out. This budgeting process will involve evaluation of the project in light of corporate priorities and provide a general overview of cost and other resource requirements. Note that this process may be an annual occurrence. Any projects in which monies have yet to be spent are generally reevaluated during every budget cycle.

1.4 Financing

Once the time has arrived for work to proceed on the project, the process of obtaining funding for the project must be started. Preliminary detailed designs are required in order to develop firm pricing. Coordination between business units is necessary to develop accurate costs and to develop a realistic schedule. This may involve detailed manpower forecasting in many areas. The resource information has to be compiled in the format necessary to be submitted to the corporate capital estimate system, and internal presentations must be conducted to sell the project to all levels of management.

Sometimes it may be necessary to obtain funding to develop the capital estimate. This may be the case when the cost to develop the preliminary designs is beyond normal departmental budgets, or if unfamiliar technology is expected to be implemented. This can also occur on large, complex projects or when a major portion of the work will be contracted. It may also be necessary to obtain early partial funding in cases where expensive, long-lead-time equipment may need to be purchased, such as large power transformers.

1.5 Traditional and Innovative Substation Design

Traditionally, high-voltage substations are engineered based on established layouts and concepts and conservative requirements. This approach can restrict the degree of freedom in introducing new solutions.

© 2003 by CRC Press LLC

The most that can be achieved with this approach is the incorporation of new primary and secondary technology in preengineered standards.

A more innovative approach is one that takes into account functional requirements such as system and customer requirements and develops alternative design solutions [1]. System requirements include elements of rated voltage, rated frequency, system configuration present and future, connected loads, lines, generation, voltage tolerances (over and under), thermal limits, short-circuit levels, frequency tolerance (over and under), stability limits, critical fault clearing time, system expansion, and interconnection. Customer requirements include environmental consideration (climatic, noise, aesthetic, spills, right-of-way), space consideration, power quality, reliability, availability, national and international applicable standards, network security, expandability, and maintainability.

Carefully selected design criteria could be developed to reflect the company philosophy. This would enable consideration and incorporation of elements such as life-cycle cost, environmental impact, initial capital investment, etc. into the design process. Design solutions could then be evaluated based on established evaluation criteria that satisfy the company interests and policies.

1.6 Site Acquisition

At this stage, a footprint of the station has been developed, including the layout of the major equipment. A decision on the final location of the facility can now be made, and various options can be evaluated. Final grades, roadways, storm-water retention, and environmental issues are addressed at this stage, and required permits are identified and obtained. Community and political acceptance must be achieved, and details of station design are negotiated in order to achieve consensus. Depending on local zoning ordinances, it may be prudent to make settlement on the property contingent upon successfully obtaining zoning approval, since the site is of little value to the utility without such approval. It is not unusual for engineering, real estate, public affairs, legal, planning, operations, and customer service personnel — along with various levels of management — to be involved in the decisions during this phase.

The first round of permit applications can now begin. While the zoning application is usually a local government issue, permits for grading, storm water management, roadway access, and other environmental or safety concerns are typically handled at the state or provincial level, and they may be federal issues in the case of wetlands or other sensitive areas. Other federal permits may also be necessary, such as those for aircraft warning lights for any tall towers or masts in the station. Permit applications are subject to unlimited bureaucratic manipulation and typically require multiple submissions and could take many months to reach conclusion. Depending on the local ordinances, zoning approval may be automatic or may require hearings that could stretch across many months. Zoning applications with significant opposition could take years to resolve.

1.7 Design, Construction, and Commissioning Process

Once the site location has been selected, the design, construction, and commissioning process would broadly follow the steps shown in Figure 1.1 [2]. Recent trends in utilities have been toward sourcing design and construction of substations through a competitive bidding process to ensure capital efficiency and labor productivity.

1.7.1 Station Design

Now the final detailed designs can be developed along with all the drawings necessary for construction. The electrical equipment and all the other materials can now be ordered and detailed schedules for all disciplines negotiated. Final manpower forecasts must be developed and coordinated with other business units. It is imperative that all stakeholders be aware of the design details and understand what needs to be built and when it needs to be completed to meet the in-service date. Once the designs are completed and the drawings published, the remaining permits can be obtained.

© 2003 by CRC Press LLC

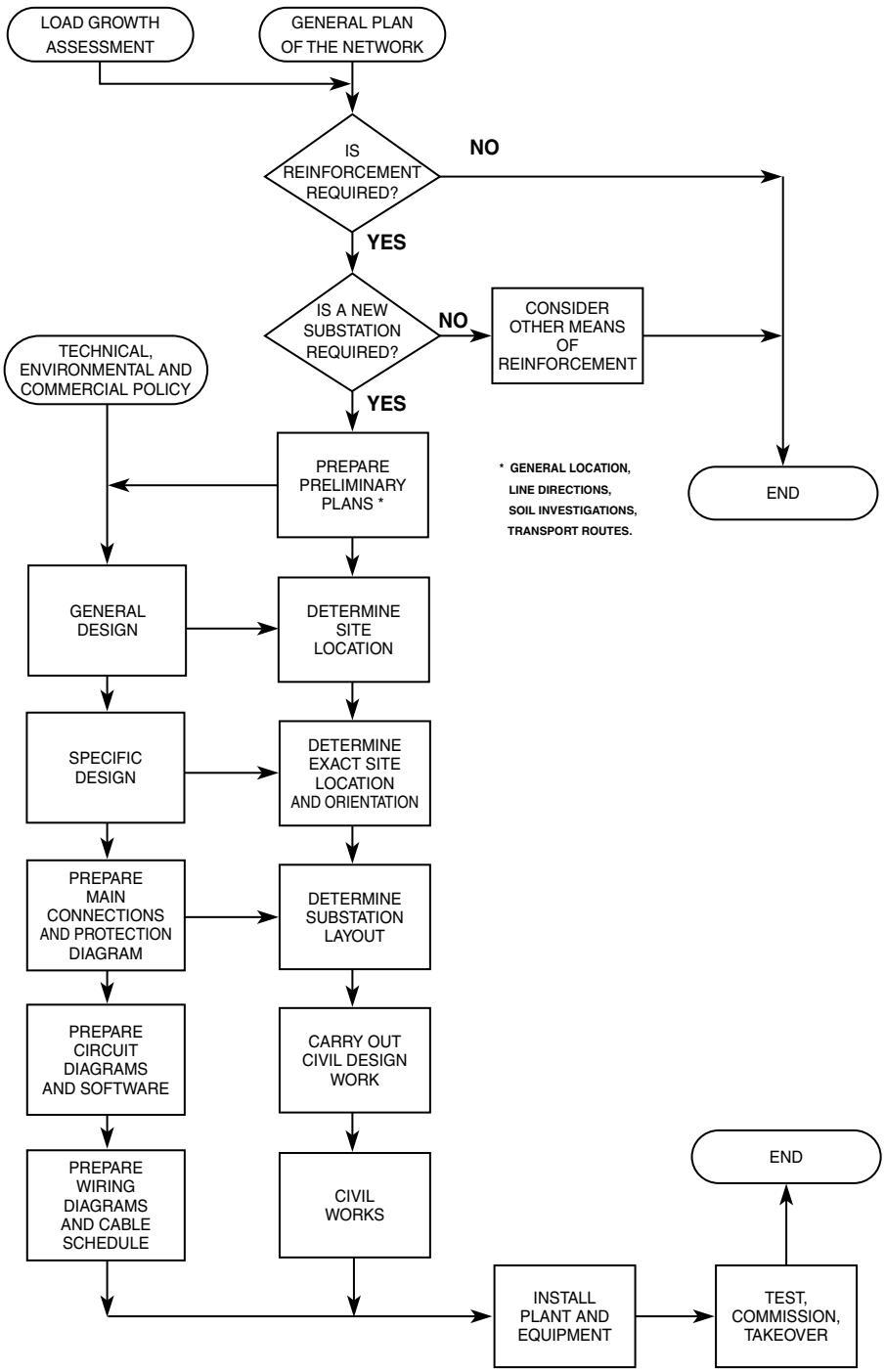

FIGURE 1.1 Flow chart illustrating steps involved in establishing a new substation [3].

© 2003 by CRC Press LLC

1.7.2 Station Construction

With permits in hand and drawings published, the construction of the station can begin. Site logistics and housekeeping can have a significant impact on the acceptance of the facility. Parking for construction personnel, traffic routing, truck activity, trailers, fencing, lack of mud and dirt control, along with trash and noise can be major irritations for neighbors, so attention to these details is essential for achieving community acceptance. All the civil, electrical, and electronic systems are installed at this time. Proper attention should also be paid to site security during the construction phase, not only to safeguard the material and equipment, but also to protect the public.

1.7.3 Station Commissioning

Once construction is complete, testing of various systems can commence and all punch-list items can be addressed. Environmental cleanup must be undertaken before final landscaping can be installed. Note that, depending upon the species of plants involved, it may be prudent to delay final landscaping until a more favorable season in order to insure optimal survival of the foliage. Public relations personnel can make the residents and community leaders aware that the project is complete, and the station can be made functional and turned over to the operating staff.

References

1. Carvalho, A. et al., Functional Substation as Key Element for Optimal Substation Concept in a Deregulated Market, paper presented at CIGRE SC 23 Colloquium, Zurich, 1999.
2. Sahazizian, A.M., The Substation Design Process — An Overview, paper presented at CIGRE SC 23 Colloquium, Venezuela, 2001.
3. CIGRE (Conseil International des Grands Reseaux Electriques) Brochure Nr. 161, *General Guidelines for the Design of Outdoor AC Substations,* August 2000, WG 23-03.

© 2003 by CRC Press LLC

2

Gas-Insulated Substations

2.1 SF_6 2-1
2.2 Construction and Service Life 2-2
Circuit Breaker • Current Transformers • Voltage Transformers • Disconnect Switches • Ground Switches • Bus • Air Connection • Cable Connections • Direct Transformer Connections • Surge Arrester • Control System • Gas Monitor System • Gas Compartments and Zones • Electrical and Physical Arrangement • Grounding • Testing • Installation • Operation and Interlocks • Maintenance
2.3 Economics of GIS 2-17
References 2-18

Philip Bolin
Mitsubishi Electric Power

A gas-insulated substation (GIS) uses a superior dielectric gas, SF_6, at moderate pressure for phase-to-phase and phase-to-ground insulation. The high voltage conductors, circuit breaker interrupters, switches, current transformers, and voltage transformers are in SF_6 gas inside grounded metal enclosures. The atmospheric air insulation used in a conventional, air-insulated substation (AIS) requires meters of air insulation to do what SF_6 can do in centimeters. GIS can therefore be smaller than AIS by up to a factor of 10. A GIS is mostly used where space is expensive or not available. In a GIS the active parts are protected from the deterioration from exposure to atmospheric air, moisture, contamination, etc. As a result, GIS is more reliable and requires less maintenance than AIS.

GIS was first developed in various countries between 1968 and 1972. After about 5 years of experience, the use rate increased to about 20% of new substations in countries where space is limited. In other countries with space easily available, the higher cost of GIS relative to AIS has limited use to special cases. For example, in the U.S., only about 2% of new substations are GIS. International experience with GIS is described in a series of CIGRE papers (CIGRE, 1992; 1994; 1982). The IEEE (IEEE Std. C37. 122-1993; IEEE Std C37. 122.1-1993) and the IEC (IEC, 1990) have standards covering all aspects of the design, testing, and use of GIS. For the new user, there is a CIGRE application guide (Katchinski et al., 1998). IEEE has a guide for specifications for GIS (IEEE Std. C37.123-1996).

2.1 SF_6

Sulfur hexaflouride is an inert, nontoxic, colorless, odorless, tasteless, and nonflammable gas consisting of a sulfur atom surrounded by and tightly bonded to six flourine atoms. It is about five times as dense as air. SF_6 is used in GIS at pressures from 400 to 600 kPa absolute. The pressure is chosen so that the SF_6 will not condense into a liquid at the lowest temperatures the equipment experiences. SF_6 has two to three times the insulating ability of air at the same pressure. SF_6 is about 100 times better than air for

0-8493-1703-7/03/$0.00+$1.50
© 2003 by CRC Press LLC

© 2003 by CRC Press LLC

interrupting arcs. It is the universally used interrupting medium for high voltage circuit breakers, replacing the older mediums of oil and air. SF_6 decomposes in the high temperature of an electric arc, but the decomposed gas recombines back into SF_6 so well that it is not necessary to replenish the SF_6 in GIS. There are some reactive decomposition byproducts formed because of the trace presence of moisture, air, and other contaminants. The quantities formed are very small. Molecular sieve absorbants inside the GIS enclosure eliminate these reactive byproducts. SF_6 is supplied in 50-kg gas cylinders in a liquid state at a pressure of about 6000 kPa for convenient storage and transport. Gas handling systems with filters, compressors, and vacuum pumps are commercially available. Best practices and the personnel safety aspects of SF_6 gas handling are covered in international standards (IEC, 1995).

The SF_6 in the equipment must be dry enough to avoid condensation of moisture as a liquid on the surfaces of the solid epoxy support insulators because liquid water on the surface can cause a dielectric breakdown. However, if the moisture condenses as ice, the breakdown voltage is not affected. So dew points in the gas in the equipment need to be below about –10°C. For additional margin, levels of less than 1000 ppmv of moisture are usually specified and easy to obtain with careful gas handling. Absorbants inside the GIS enclosure help keep the moisture level in the gas low, even though over time, moisture will evolve from the internal surfaces and out of the solid dielectric materials (IEEE Std. 1125-1993).

Small conducting particles of mm size significantly reduce the dielectric strength of SF_6 gas. This effect becomes greater as the pressure is raised past about 600 kPa absolute (Cookson and Farish, 1973). The particles are moved by the electric field, possibly to the higher field regions inside the equipment or deposited along the surface of the solid epoxy support insulators, leading to dielectric breakdown at operating voltage levels. Cleanliness in assembly is therefore very important for GIS. Fortunately, during the factory and field power frequency high voltage tests, contaminating particles can be detected as they move and cause small electric discharges (partial discharge) and acoustic signals, so they can be removed by opening the equipment. Some GIS equipment is provided with internal "particle traps" that capture the particles before they move to a location where they might cause breakdown. Most GIS assemblies are of a shape that provides some "natural" low electric field regions where particles can rest without causing problems.

SF_6 is a strong greenhouse gas that could contribute to global warming. At an international treaty conference in Kyoto in 1997, SF_6 was listed as one of the six greenhouse gases whose emissions should be reduced. SF_6 is a very minor contributor to the total amount of greenhouse gases due to human activity, but it has a very long life in the atmosphere (half-life is estimated at 3200 years), so the effect of SF_6 released to the atmosphere is effectively cumulative and permanent. The major use of SF_6 is in electrical power equipment. Fortunately, in GIS the SF_6 is contained and can be recycled. By following the present international guidelines for use of SF_6 in electrical equipment (Mauthe et al., 1997), the contribution of SF_6 to global warming can be kept to less than 0.1% over a 100-year horizon. The emission rate from use in electrical equipment has been reduced over the last three years. Most of this effect has been due to simply adopting better handling and recycling practices. Standards now require GIS to leak less than 1% per year. The leakage rate is normally much lower. Field checks of GIS in service for many years indicate that the leak rate objective can be as low as 0.1% per year when GIS standards are revised.

2.2 Construction and Service Life

GIS is assembled of standard equipment modules (circuit breaker, current transformers, voltage transformers, disconnect and ground switches, interconnecting bus, surge arresters, and connections to the rest of the electric power system) to match the electrical one-line diagram of the substation. A cross-section view of a 242-kV GIS shows the construction and typical dimensions (Figure 2.1). The modules are joined using bolted flanges with an "O" ring seal system for the enclosure and a sliding plug-in contact for the conductor. Internal parts of the GIS are supported by cast epoxy insulators. These support insulators provide a gas barrier between parts of the GIS, or are cast with holes in the epoxy to allow gas to pass from one side to the other.

© 2003 by CRC Press LLC

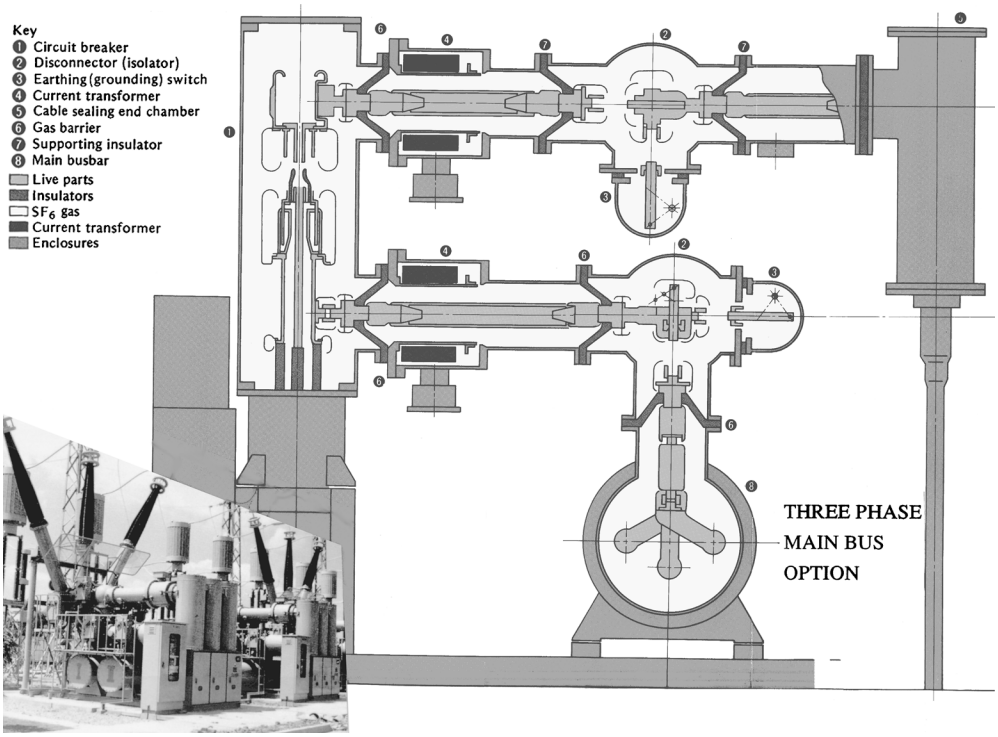

FIGURE 2.1 Single-phase enclosure GIS.

Up to about 170 kV system voltage, all three phases are often in one enclosure (Figure 2.2). Above 170 kV, the size of the enclosure for "three-phase enclosure," GIS becomes too large to be practical. So a "single-phase enclosure" design (Figure 2.1) is used. There are no established performance differences between three-phase enclosure and single-phase enclosure GIS. Some manufacturers use the single-phase enclosure type for all voltage levels.

Enclosures today are mostly cast or welded aluminum, but steel is also used. Steel enclosures are painted inside and outside to prevent rusting. Aluminum enclosures do not need to be painted, but may be painted for ease of cleaning and a better appearance. The pressure vessel requirements for GIS enclosures are set by GIS standards (IEEE Std. C37.122-1993; IEC, 1990), with the actual design, manufacture, and test following an established pressure vessel standard of the country of manufacture. Because of the moderate pressures involved, and the classification of GIS as electrical equipment, third-party inspection and code stamping of the GIS enclosures are not required.

Conductors today are mostly aluminum. Copper is sometimes used. It is usual to silver plate surfaces that transfer current. Bolted joints and sliding electrical contacts are used to join conductor sections. There are many designs for the sliding contact element. In general, sliding contacts have many individually sprung copper contact fingers working in parallel. Usually the contact fingers are silver plated. A contact lubricant is used to ensure that the sliding contact surfaces do not generate particles or wear out over time. The sliding conductor contacts make assembly of the modules easy and also allow for conductor movement to accommodate the differential thermal expansion of the conductor relative to the enclosure. Sliding contact assemblies are also used in circuit breakers and switches to transfer current from the moving contact to the stationary contacts.

Support insulators are made of a highly filled epoxy resin cast very carefully to prevent formation of voids and/or cracks during curing. Each GIS manufacturer's material formulation and insulator shape has been developed to optimize the support insulator in terms of electric field distribution, mechanical strength, resistance to surface electric discharges, and convenience of manufacture and assembly. Post,

© 2003 by CRC Press LLC

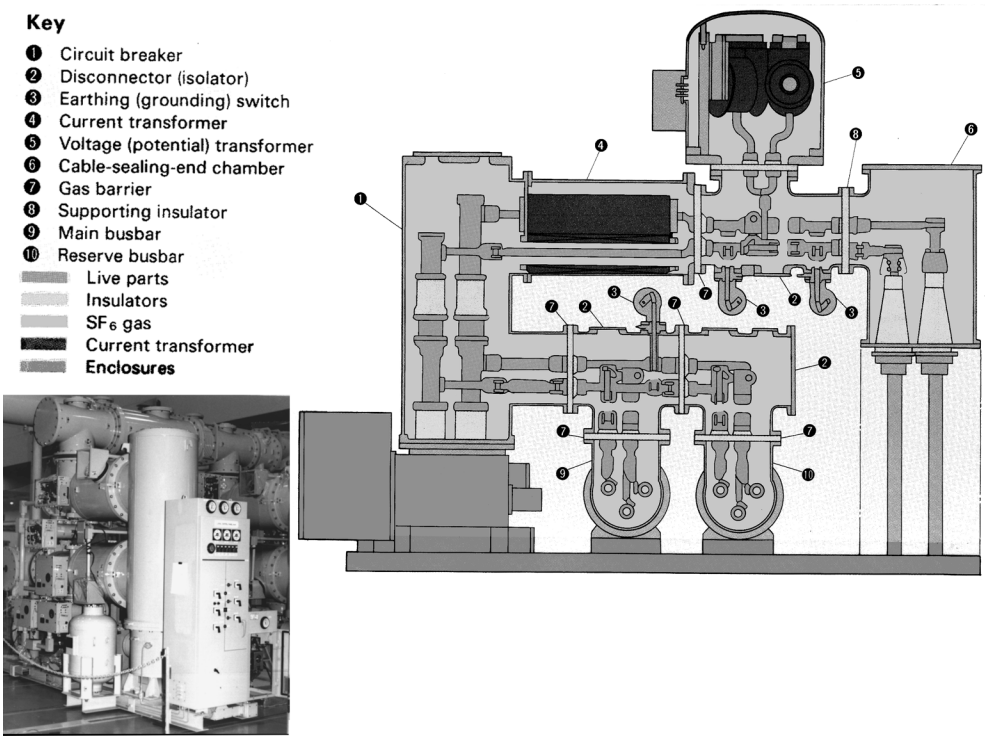

FIGURE 2.2 Three-phase enclosure GIS.

disc, and cone type support insulators are used. Quality assurance programs for support insulators include a high voltage power frequency withstand test with sensitive partial discharge monitoring. Experience has shown that the electric field stress inside the cast epoxy insulator should be below a certain level to avoid aging of the solid dielectric material. The electrical stress limit for the cast epoxy support insulator is not a severe design constraint because the dimensions of the GIS are mainly set by the lightning impulse withstand level and the need for the conductor to have a fairly large diameter to carry to load current of several thousand amperes. The result is space between the conductor and enclosure for support insulators having low electrical stress.

Service life of GIS using the construction described above has been shown by experience to be more than 30 years. The condition of GIS examined after many years in service does not indicate any approaching limit in service life. Experience also shows no need for periodic internal inspection or maintenance. Inside the enclosure is a dry, inert gas that is itself not subject to aging. There is no exposure of any of the internal materials to sunlight. Even the "O" ring seals are found to be in excellent condition because there is almost always a "double seal" system — Figure 2.3 shows one approach. The lack of aging has been found for GIS, whether installed indoors or outdoors.

2.2.1 Circuit Breaker

GIS uses essentially the same dead tank SF_6 puffer circuit breakers used in AIS. Instead of SF_6-to-air as connections into the substation as a whole, the nozzles on the circuit breaker enclosure are directly connected to the adjacent GIS module.

2.2.2 Current Transformers

CTs are inductive ring types installed either inside the GIS enclosure or outside the GIS enclosure (Figure 2.4). The GIS conductor is the single turn primary for the CT. CTs inside the enclosure must be

© 2003 by CRC Press LLC

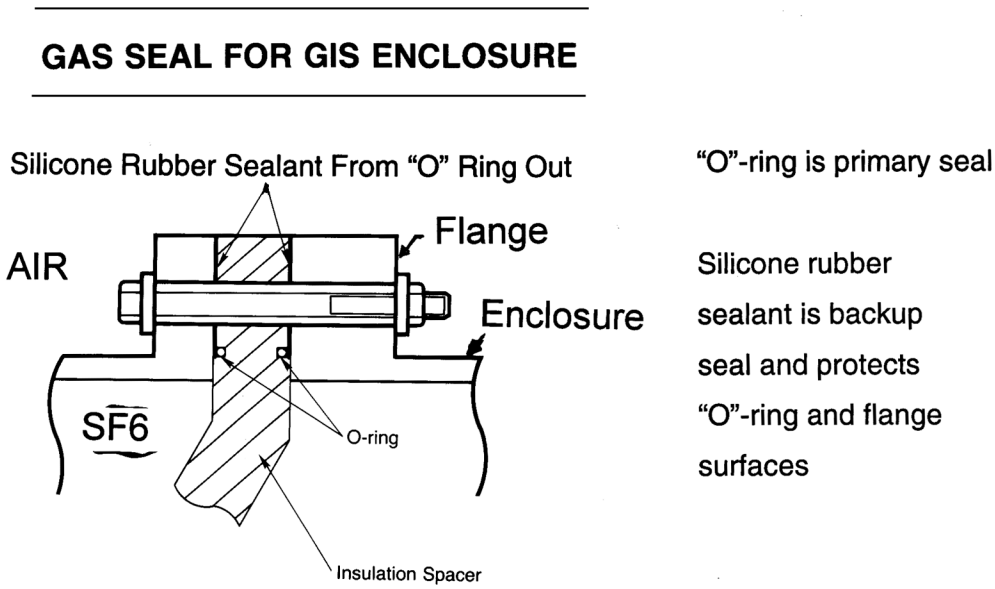

FIGURE 2.3 Gas seal for GIS enclosure.

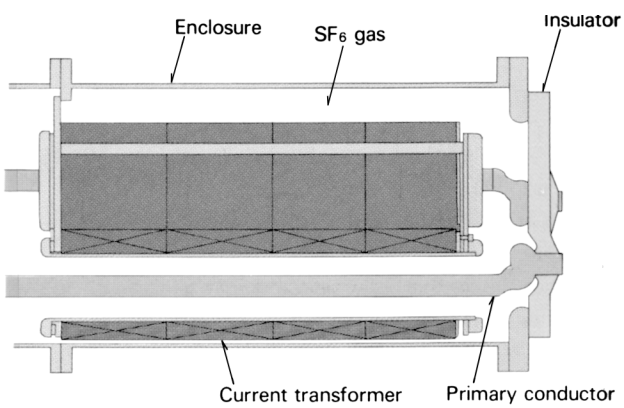

FIGURE 2.4 Current transformers for GIS.

shielded from the electric field produced by the high voltage conductor or high transient voltages can appear on the secondary through capacitive coupling. For CTs outside the enclosure, the enclosure itself must be provided with an insulating joint, and enclosure currents shunted around the CT. Both types of construction are in wide use.

2.2.3 Voltage Transformers

VTs are inductive types with an iron core. The primary winding is supported on an insulating plastic film immersed in SF_6. The VT should have an electric field shield between the primary and secondary windings to prevent capacitive coupling of transient voltages. The VT is usually a sealed unit with a gas barrier insulator. The VT is either easily removable so the GIS can be high voltage tested without damaging the VT, or the VT is provided with a disconnect switch or removable link (Figure 2.5).

© 2003 by CRC Press LLC

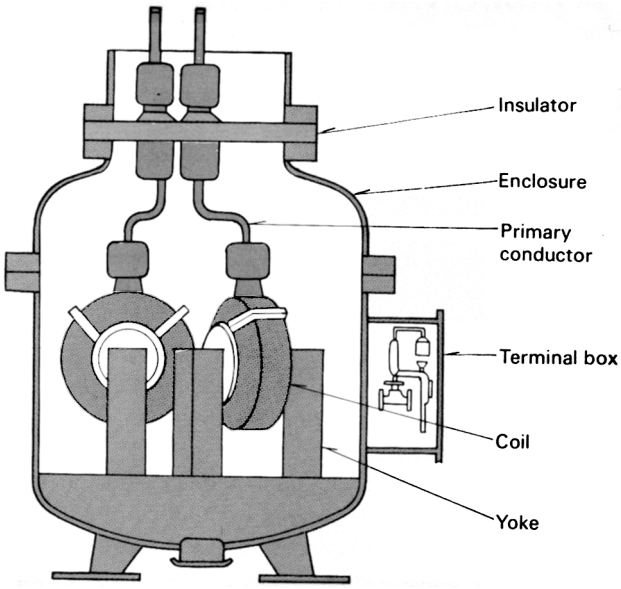

FIGURE 2.5 Voltage transformers for GIS.

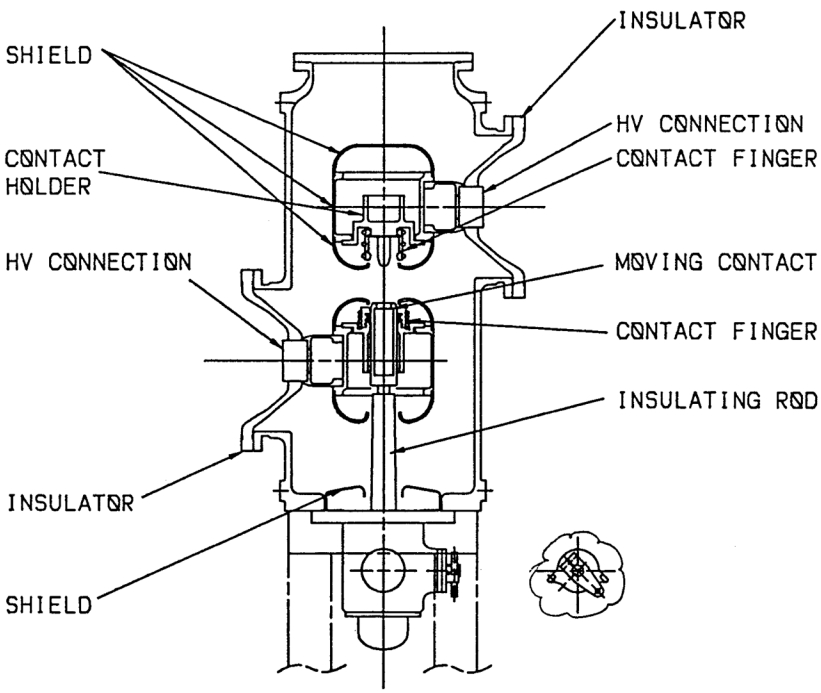

FIGURE 2.6 Disconnect switches for GIS.

2.2.4 Disconnect Switches

Disconnect switches (Figure 2.6) have a moving contact that opens or closes a gap between stationary contacts when activated by an insulating operating rod that is itself moved by a sealed shaft coming through the enclosure wall. The stationary contacts have shields that provide the appropriate electric field distribution

© 2003 by CRC Press LLC

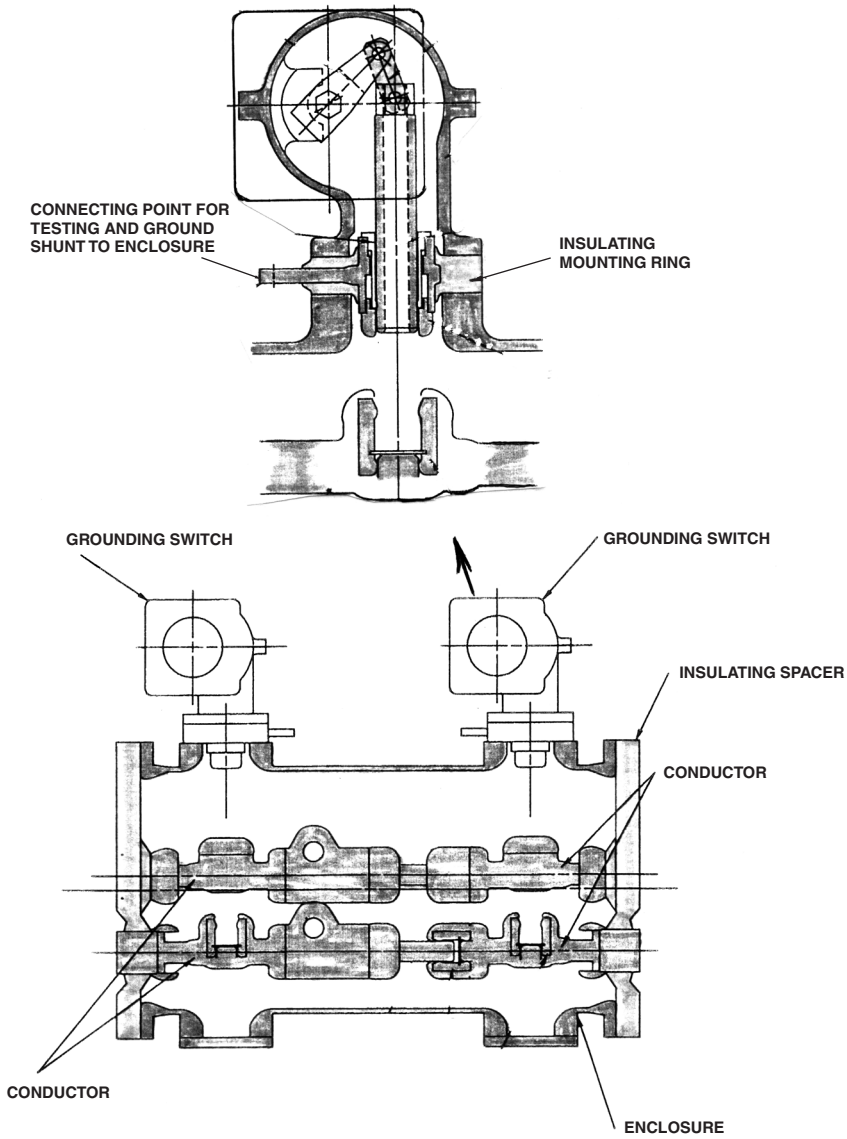

FIGURE 2.7 Ground switches for GIS.

to avoid too high a surface stress. The moving contact velocity is relatively low (compared to a circuit breaker moving contact) and the disconnect switch can interrupt only low levels of capacitive current (for example, disconnecting a section of GIS bus) or small inductive currents (for example, transformer magnetizing current). Load break disconnect switches have been furnished in the past, but with improvements and cost reductions of circuit breakers, it is not practical to continue to furnish load break disconnect switches, and a circuit breaker should be used instead.

2.2.5 Ground Switches

Ground switches (Figure 2.7) have a moving contact that opens or closes a gap between the high voltage conductor and the enclosure. Sliding contacts with appropriate electric field shields are provided at the enclosure and the conductor. A "maintenance" ground switch is operated either manually or by motor

© 2003 by CRC Press LLC

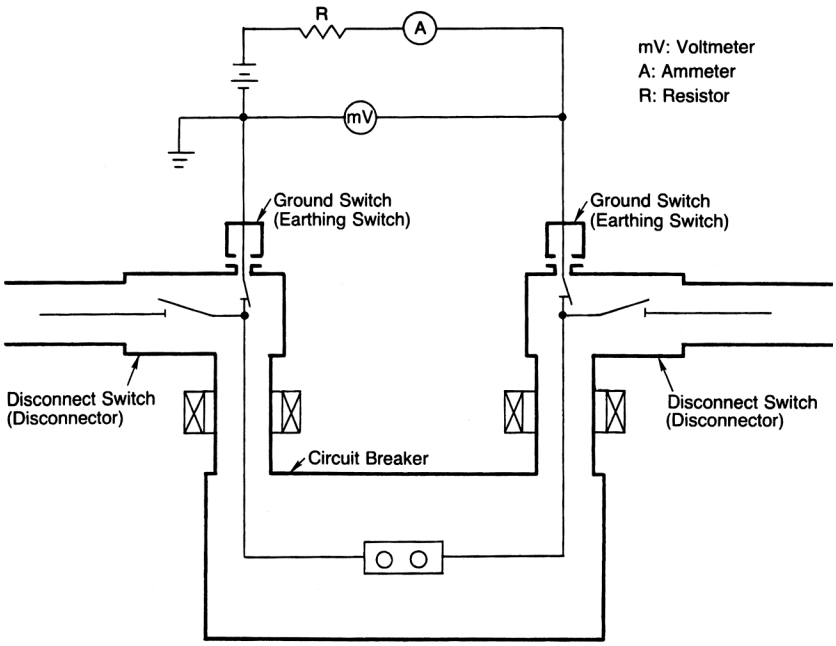

FIGURE 2.8 Contact resistance measured using ground switch.

drive to close or open in several seconds and when fully closed to carry the rated short-circuit current for the specified time period (1 or 3 sec) without damage. A "fast-acting" ground switch has a high speed drive, usually a spring, and contact materials that withstand arcing so it can be closed twice onto an energized conductor without significant damage to itself or adjacent parts. Fast-acting ground switches are frequently used at the connection point of the GIS to the rest of the electric power network, not only in case the connected line is energized, but also because the fast-acting ground switch is better able to handle discharge of trapped charge and breaking of capacitive or inductive coupled currents on the connected line.

Ground switches are almost always provided with an insulating mount or an insulating bushing for the ground connection. In normal operation the insulating element is bypassed with a bolted shunt to the GIS enclosure. During installation or maintenance, with the ground switch closed, the shunt can be removed and the ground switch used as a connection from test equipment to the GIS conductor. Voltage and current testing of the internal parts of the GIS can then be done without removing SF_6 gas or opening the enclosure. A typical test is measurement of contact resistance using two ground switches (Figure 2.8).

2.2.6 Bus

To connect GIS modules that are not directly connected to each other, an SF_6 bus consisting of an inner conductor and outer enclosure is used. Support insulators, sliding electrical contacts, and flanged enclosure joints are usually the same as for the GIS modules.

2.2.7 Air Connection

SF_6-to-air bushings (Figure 2.9) are made by attaching a hollow insulating cylinder to a flange on the end of a GIS enclosure. The insulating cylinder contains pressurized SF_6 on the inside and is suitable for exposure to atmospheric air on the outside. The conductor continues up through the center of the insulating cylinder to a metal end plate. The outside of the end plate has provisions for bolting to an air insulated conductor. The insulating cylinder has a smooth interior. Sheds on the outside improve the

© 2003 by CRC Press LLC

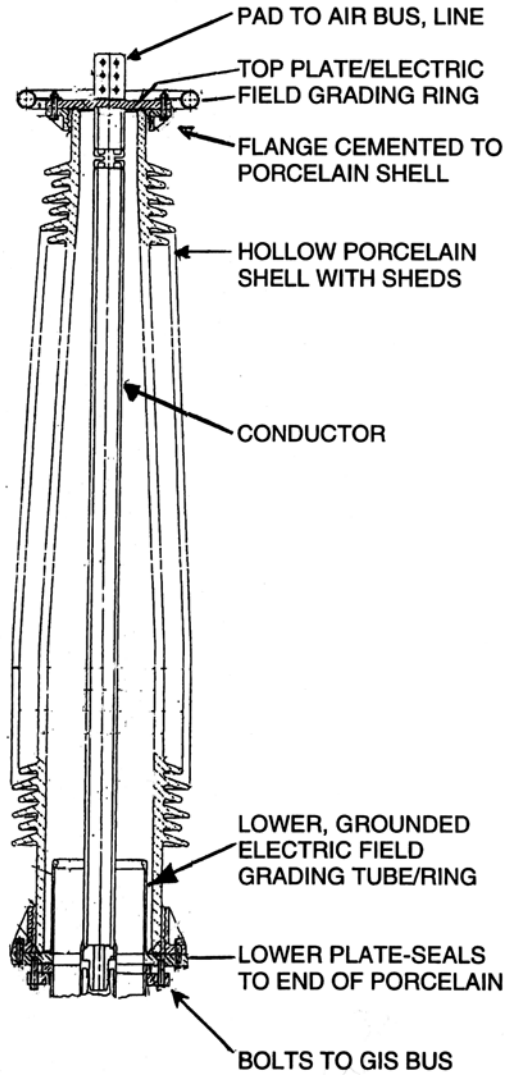

FIGURE 2.9 SF_6-to-air bushing.

performance in air under wet and/or contaminated conditions. Electric field distribution is controlled by internal metal shields. Higher voltage SF_6-to-air bushings also use external shields. The SF_6 gas inside the bushing is usually the same pressure as the rest of the GIS. The insulating cylinder has most often been porcelain in the past, but today many are a composite consisting of a fiberglass epoxy inner cylinder with an external weather shed of silicone rubber. The composite bushing has better contamination resistance and is inherently safer because it will not fracture as will porcelain.

2.2.8 Cable Connections

A cable connecting to a GIS is provided with a cable termination kit that is installed on the cable to provide a physical barrier between the cable dielectric and the SF_6 gas in the GIS (Figure 2.10). The cable termination kit also provides a suitable electric field distribution at the end of the cable. Because the cable termination will be in SF_6 gas, the length is short and sheds are not needed. The cable conductor is connected with bolted or compression connectors to the end plate or cylinder of the cable termination

© 2003 by CRC Press LLC

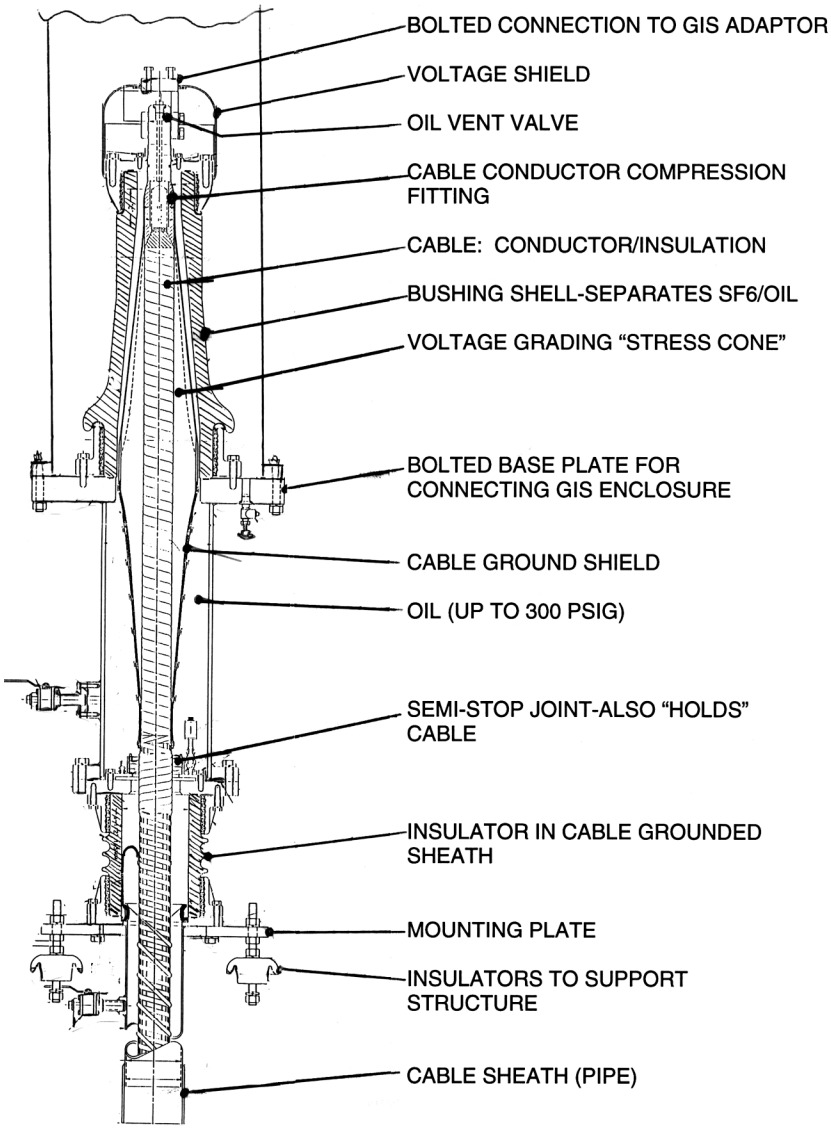

FIGURE 2.10 Power cable connection.

kit. On the GIS side, a removable link or plug in contact transfers current from the cable to the GIS conductor. For high voltage testing of the GIS or the cable, the cable is disconnected from the GIS by removing the conductor link or plug-in contact. The GIS enclosure around the cable termination usually has an access port. This port can also be used for attaching a test bushing.

2.2.9 Direct Transformer Connections

To connect a GIS directly to a transformer, a special SF_6-to-oil bushing that mounts on the transformer is used (Figure 2.11). The bushing is connected under oil on one end to the transformer's high voltage leads. The other end is SF_6 and has a removable link or sliding contact for connection to the GIS conductor. The bushing may be an oil-paper condenser type or more commonly today, a solid insulation type. Because leakage of SF_6 into the transformer oil must be prevented, most SF_6-to-oil bushings have a center

© 2003 by CRC Press LLC

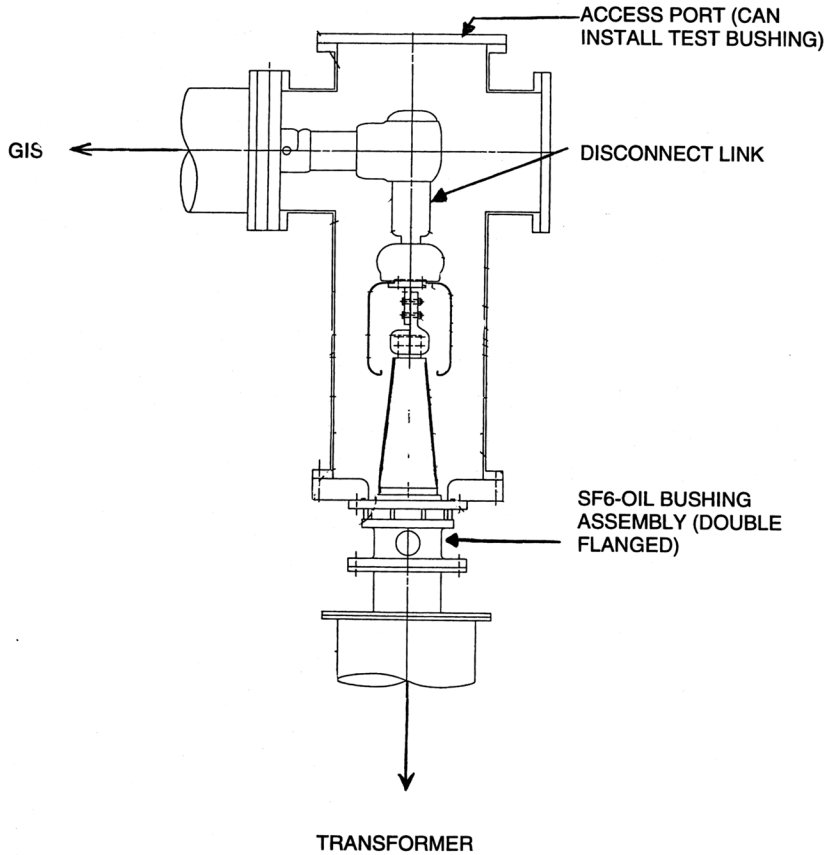

FIGURE 2.11 Direct SF_6 bus connection to transformer.

section that allows any SF_6 leakage to go to the atmosphere rather than into the transformer. For testing, the SF_6 end of the bushing is disconnected from the GIS conductor after gaining access through an opening in the GIS enclosure. The GIS enclosure of the transformer can also be used for attaching a test bushing.

2.2.10 Surge Arrester

Zinc oxide surge arrester elements suitable for immersion in SF_6 are supported by an insulating cylinder inside a GIS enclosure section to make a surge arrester for overvoltage control (Figure 2.12). Because the GIS conductors are inside in a grounded metal enclosure, the only way for lightning impulse voltages to enter is through the connections of the GIS to the rest of the electrical system. Cable and direct transformer connections are not subject to lightning strikes, so only at SF_6-to-air bushing connections is lightning a concern. Air-insulated surge arresters in parallel with the SF_6-to-air bushings usually provide adequate protection of the GIS from lightning impulse voltages at a much lower cost than SF_6 insulated arresters. Switching surges are seldom a concern in GIS because with SF_6 insulation the withstand voltages for switching surges are not much less than the lightning impulse voltage withstand. In AIS there is a significant decrease in withstand voltage for switching surges than for lightning impulse because the longer time span of the switching surge allows time for the discharge to completely bridge the long insulation distances in air. In the GIS, the short insulation distances can be bridged in the short time span of a lightning impulse so the longer time span of a switching surge does not significantly decrease the breakdown voltage. Insulation coordination studies usually show there is no need for surge arresters

© 2003 by CRC Press LLC

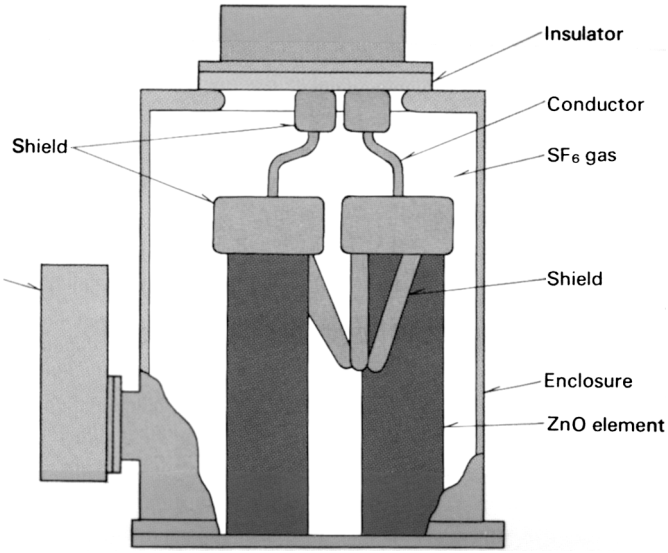

FIGURE 2.12 Surge arrester for GIS.

in a GIS; however, many users specify surge arresters at transformers and cable connections as the most conservative approach.

2.2.11 Control System

For ease of operation and convenience in wiring the GIS back to the substation control room, a local control cabinet (LCC) is provided for each circuit breaker position (Figure 2.13). The control and power wires for all the operating mechanisms, auxiliary switches, alarms, heaters, CTs, and VTs are brought from the GIS equipment modules to the LCC using shielded multiconductor control cables. In addition to providing terminals for all the GIS wiring, the LCC has a mimic diagram of the part of the GIS being controlled. Associated with the mimic diagram are control switches and position indicators for the circuit breaker and switches. Annunciation of alarms is also usually provided in the LCC. Electrical interlocking and some other control functions can be conveniently implemented in the LCC. Although the LCC is an extra expense, with no equivalent in the typical AIS, it is so well established and popular that attempts to eliminate it to reduce cost have not succeeded. The LCC does have the advantage of providing a very clear division of responsibility between the GIS manufacturer and user in terms of scope of equipment supply.

Switching and circuit breaker operation in a GIS produces internal surge voltages with a very fast rise time on the order of nanoseconds and a peak voltage level of about 2 per unit. These "very fast transient overvoltages" are not a problem inside the GIS because the duration of this type of surge voltage is very short — much shorter than the lightning impulse voltage. However, a portion of the VFTO will emerge from the inside of the GIS at any place where there is a discontinuity of the metal enclosure — for example, at insulating enclosure joints for external CTs or at the SF_6-to-air bushings. The resulting "transient ground rise voltage" on the outside of the enclosure may cause some small sparks across the insulating enclosure joint or to adjacent grounded parts. These may alarm nearby personnel but are not harmful to a person because the energy content is very low. However, if these VFT voltages enter the control wires, they could cause faulty operation of control devices. Solid-state controls can be particularly affected. The solution is thorough shielding and grounding of the control wires. For this reason, in a GIS, the control cable shield should be grounded at both the equipment and the LCC ends using either coaxial ground bushings or short connections to the cabinet walls at the location where the control cable first enters the cabinet.

© 2003 by CRC Press LLC

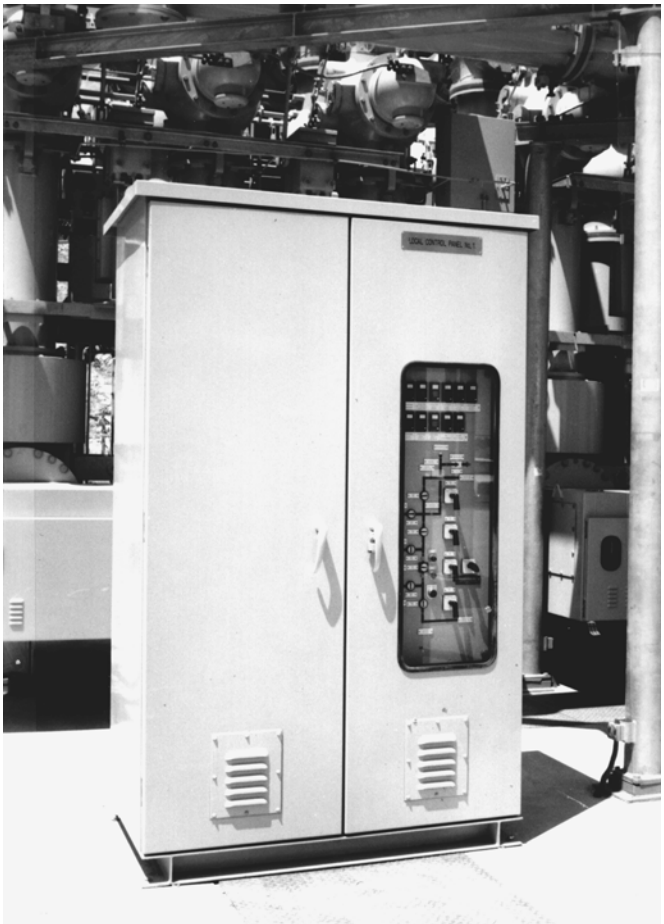

FIGURE 2.13 Local control cabinet for GIS.

2.2.12 Gas Monitor System

The insulating and interrupting capability of the SF_6 gas depends on the density of the SF_6 gas being at a minimum level established by design tests. The pressure of the SF_6 gas varies with temperature, so a mechanical temperature-compensated pressure switch is used to monitor the equivalent of gas density (Figure 2.14). GIS is filled with SF_6 to a density far enough above the minimum density for full dielectric and interrupting capability so that from 10 to 20% of the SF_6 gas can be lost before the performance of the GIS deteriorates. The density alarms provide a warning of gas being lost, and can be used to operate the circuit breakers and switches to put a GIS that is losing gas into a condition selected by the user. Because it is much easier to measure pressure than density, the gas monitor system usually has a pressure gage. A chart is provided to convert pressure and temperature measurements into density. Microprocessor-based measurement systems are available that provide pressure, temperature, density, and even percentage of proper SF_6 content. These can also calculate the rate at which SF_6 is being lost. However, they are significantly more expensive than the mechanical temperature-compensated pressure switches, so they are supplied only when requested by the user.

2.2.13 Gas Compartments and Zones

A GIS is divided by gas barrier insulators into gas compartments for gas handling purposes. In some cases, the use of a higher gas pressure in the circuit breaker than is needed for the other devices, requires

© 2003 by CRC Press LLC

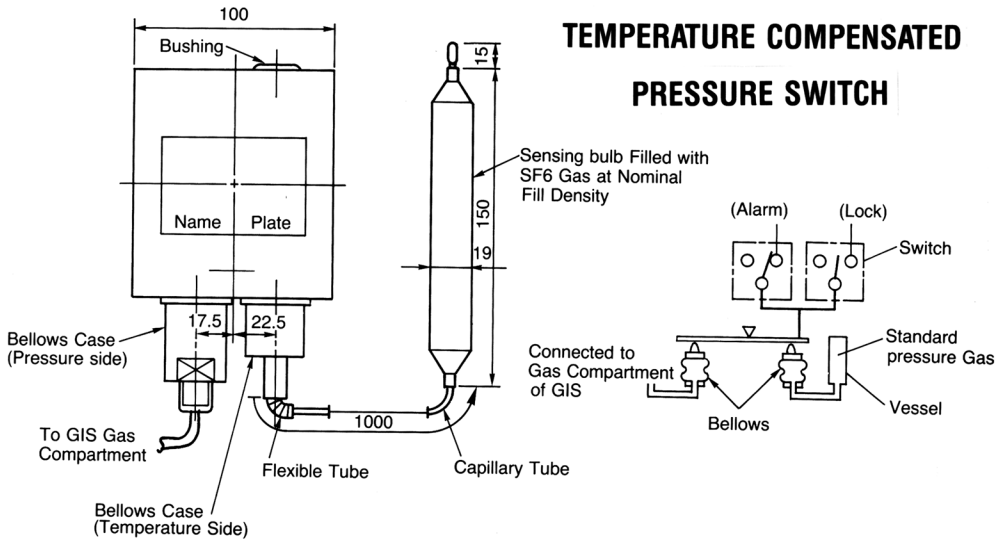

FIGURE 2.14 SF_6 density monitor for GIS.

that the circuit breaker be a separate gas compartment. Gas handling systems are available to easily process and store about 1000 kg of SF_6 at one time, but the length of time needed to do this is longer than most GIS users will accept. GIS is therefore divided into relatively small gas compartments of less than several hundred kg. These small compartments may be connected with external bypass piping to create a larger gas zone for density monitoring. The electrical functions of the GIS are all on a three-phase basis, so there is no electrical reason not to connect the parallel phases of a single-phase enclosure type of GIS into one gas zone for monitoring. Reasons for not connecting together many gas compartments into large gas zones include a concern with a fault in one gas compartment causing contamination in adjacent compartments and the greater amount of SF_6 lost before a gas loss alarm. It is also easier to locate a leak if the alarms correspond to small gas zones, but a larger gas zone will, for the same size leak, give more time to add SF_6 between the first alarm and second alarm. Each GIS manufacturer has a standard approach to gas compartments and gas zones, but will, of course, modify the approach to satisfy the concerns of individual GIS users.

2.2.14 Electrical and Physical Arrangement

For any electrical one-line diagram there are usually several possible physical arrangements. The shape of the site for the GIS and the nature of connecting lines and/or cables should be considered. Figure 2.15 compares a "natural" physical arrangement for a breaker and a half GIS with a "linear" arrangement.

Most GIS designs were developed initially for a double bus, single breaker arrangement (Figure 2.2). This widely used approach provides good reliability, simple operation, easy protective relaying, excellent economy, and a small footprint. By integrating several functions into each GIS module, the cost of the double bus, single breaker arrangement can be significantly reduced. An example is shown in Figure 2.16. Disconnect and ground switches are combined into a "three-position switch" and made a part of each bus module connecting adjacent circuit breaker positions. The cable connection module includes the cable termination, disconnect switches, ground switches, a VT, and surge arresters.

2.2.15 Grounding

The individual metal enclosure sections of the GIS modules are made electrically continuous either by the flanged enclosure joint being a good electrical contact in itself or with external shunts bolted to the flanges or to grounding pads on the enclosure. While some early single-phase enclosure GIS were "single

© 2003 by CRC Press LLC

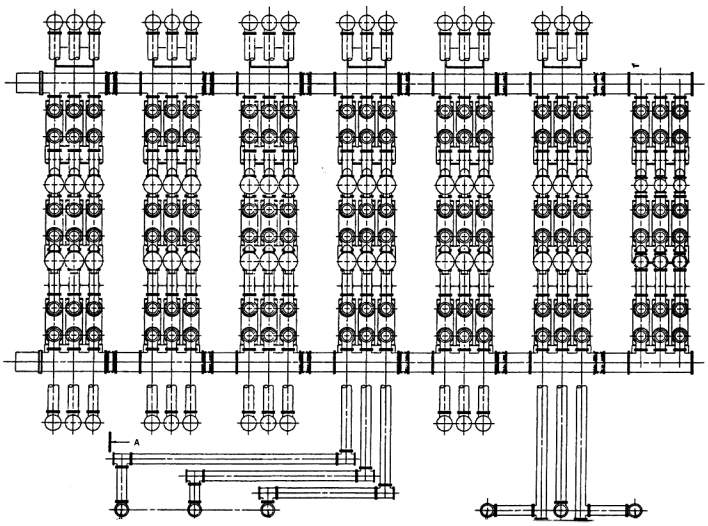

Natural – Each Bay Between Main Busbars Has Three Circuit Breakers

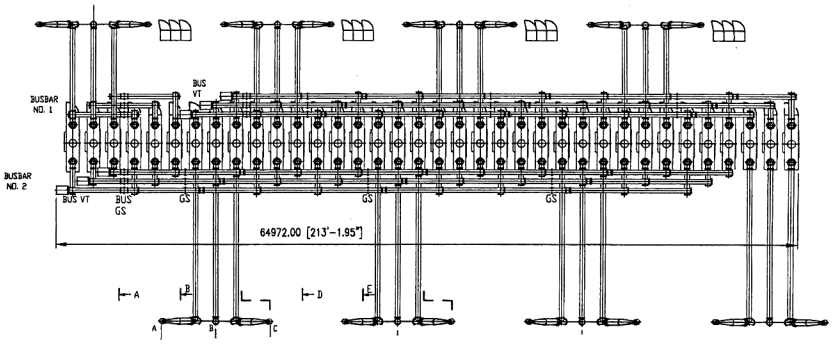

Linear – Circuit Breakers Are Side by Side

FIGURE 2.15 One-and-one-half circuit breaker layouts.

point grounded" to prevent circulating currents from flowing in the enclosures, today the universal practice is to use "multipoint grounding" even though this leads to some electrical losses in the enclosures due to circulating currents. The three enclosures of a single-phase GIS should be bonded to each other at the ends of the GIS to encourage circulating currents to flow. These circulating enclosure currents act to cancel the magnetic field that would otherwise exist outside the enclosure due to the conductor current. Three-phase enclosure GIS does not have circulating currents, but does have eddy currents in the enclosure, and should also be multipoint grounded. With multipoint grounding and the resulting many parallel paths for the current from an internal fault to flow to the substation ground grid, it is easy to keep the touch and step voltages for a GIS to the safe levels prescribed in IEEE 80.

2.2.16 Testing

Test requirements for circuit breakers, CTs, VTs, and surge arresters are not specific for GIS and will not be covered in detail here. Representative GIS assemblies having all of the parts of the GIS except for the circuit breaker are design tested to show that the GIS can withstand the rated lightning impulse voltage,

© 2003 by CRC Press LLC

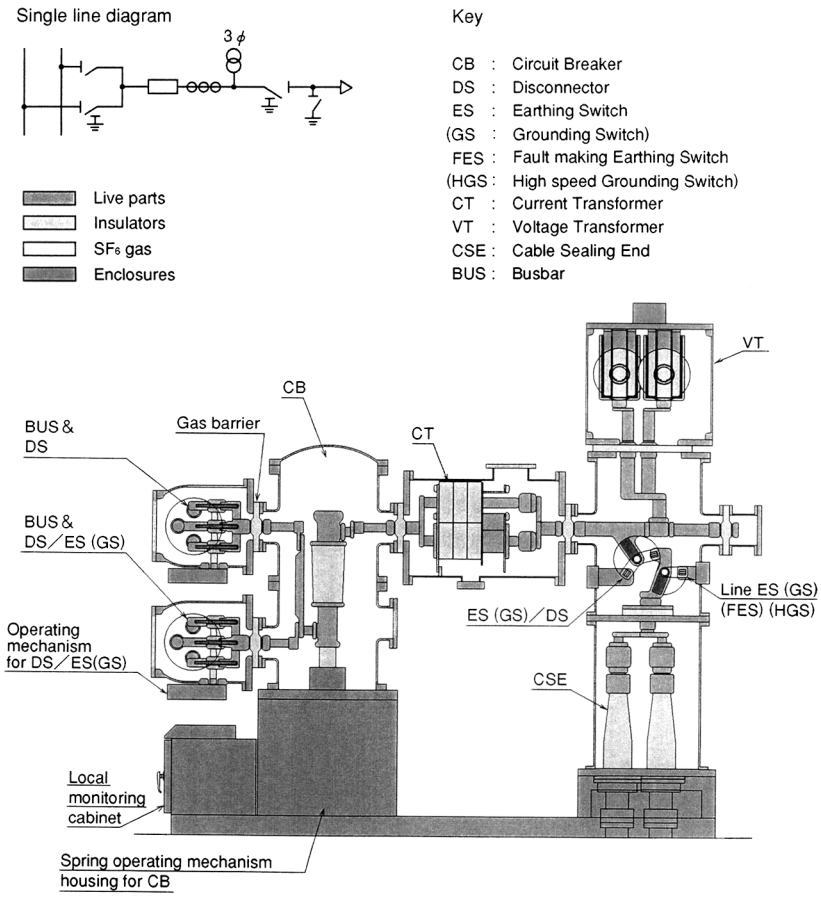

FIGURE 2.16 Integrated (combined function) GIS.

switching impulse voltage, power frequency overvoltage, continuous current, and short-circuit current. Standards specify the test levels and how the tests must be done. Production tests of the factory-assembled GIS (including the circuit breaker) cover power frequency withstand voltage, conductor circuit resistance, leak checks, operational checks, and CT polarity checks. Components such as support insulators, VTs, and CTs are tested in accordance with the specific requirements for these items before assembly into the GIS. Field tests repeat the factory tests. The power frequency withstand voltage test is most important as a check of the cleanliness of the inside of the GIS in regard to contaminating conducting particles, as explained in the SF_6 section above. Checking of interlocks is also very important. Other field tests may be done if the GIS is a very critical part of the electric power system, when, for example, a surge voltage test may be requested.

2.2.17 Installation

The GIS is usually installed on a monolithic concrete pad or the floor of a building. It is most often rigidly attached by bolting and/or welding the GIS support frames to embedded steel plates or beams. Chemical drill anchors can also be used. Expansion drill anchors are not recommended because dynamic loads may loosen expansion anchors when the circuit breaker operates. Large GIS installations may need bus expansion joints between various sections of the GIS to adjust to the fit-up in the field and, in some cases, provide for thermal expansion of the GIS. The GIS modules are shipped in the largest practical assemblies. At the lower voltage level, two or more circuit breaker positions can be delivered fully

© 2003 by CRC Press LLC

assembled. The physical assembly of the GIS modules to each other using the bolted flanged enclosure joints and sliding conductor contacts goes very quickly. More time is used for evacuation of air from gas compartments that have been opened, filling with SF_6 gas, and control system wiring. The field tests are then done. For a high voltage GIS shipped as many separate modules, installation and testing takes about two weeks per circuit breaker position. Lower voltage systems shipped as complete bays, and mostly factory-wired, can be installed more quickly.

2.2.18 Operation and Interlocks

Operation of a GIS in terms of providing monitoring, control, and protection of the power system as a whole is the same as for an AIS except that internal faults are not self-clearing so reclosing should not be used for faults internal to the GIS. Special care should be taken for disconnect and ground switch operation because if these are opened with load current flowing, or closed into load or fault current, the arcing between the switch moving and stationary contacts will usually cause a phase-to-phase fault in three-phase enclosure GIS or to a phase-to-ground fault in single-phase enclosure GIS. The internal fault will cause severe damage inside the GIS. A GIS switch cannot be as easily or quickly replaced as an AIS switch. There will also be a pressure rise in the GIS gas compartment as the arc heats the gas. In extreme cases, the internal arc will cause a rupture disk to operate or may even cause a burn-through of the enclosure. The resulting release of hot, decomposed SF_6 gas may cause serious injury to nearby personnel. For both the sake of the GIS and the safety of personnel, secure interlocks are provided so that the circuit breaker must be open before an associated disconnect switch can be opened or closed, and the disconnect switch must be open before the associated ground switch can be closed or opened.

2.2.19 Maintenance

Experience has shown that the internal parts of GIS are so well protected inside the metal enclosure that they do not age and as a result of proper material selection and lubricants, there is negligible wear of the switch contacts. Only the circuit breaker arcing contacts and the teflon nozzle of the interrupter experience wear proportional to the number of operations and the level of the load or fault currents being interrupted. Good contact and nozzle materials combined with the short interrupting time of modern circuit breakers provide, typically, for thousands of load current interruption operations and tens of full-rated fault current interruptions before there is any need for inspection or replacement. Except for circuit breakers in special use such as at a pumped storage plant, most circuit breakers will not be operated enough to ever require internal inspection. So most GIS will not need to be opened for maintenance. The external operating mechanisms and gas monitor systems should be visually inspected, with the frequency of inspection determined by experience.

2.3 Economics of GIS

The equipment cost of GIS is naturally higher than that of AIS due to the grounded metal enclosure, the provision of an LCC, and the high degree of factory assembly. A GIS is less expensive to install than an AIS. The site development costs for a GIS will be much lower than for an AIS because of the much smaller area required for the GIS. The site development advantage of GIS increases as the system voltage increases because high voltage AIS take very large areas because of the long insulating distances in atmospheric air. Cost comparisons in the early days of GIS projected that, on a total installed cost basis, GIS costs would equal AIS costs at 345 kV. For higher voltages, GIS was expected to cost less than AIS. However, the cost of AIS has been reduced significantly by technical and manufacturing advances (especially for circuit breakers) over the last 30 years, but GIS equipment has not shown any cost reduction until very recently. Therefore, although GIS has been a well-established technology for a long time, with a proven high reliability and almost no need for maintenance, it is presently perceived as costing too much and is only applicable in special cases where space is the most important factor.

© 2003 by CRC Press LLC

Currently, GIS costs are being reduced by integrating functions as described in the arrangement section above. As digital control systems become common in substations, the costly electromagnetic CTs and VTs of a GIS will be replaced by less-expensive sensors such as optical VTs and Rogowski coil CTs. These less-expensive sensors are also much smaller, reducing the size of the GIS and allowing more bays of GIS to be shipped fully assembled. Installation and site development costs are correspondingly lower. The GIS space advantage over AIS increases. GIS can now be considered for any new substation or the expansion of an existing substation without enlarging the area for the substation.

References

Cookson, A. H. and Farish, O., Particle-initiated breakdown between coaxial electrodes in compressed SF_6, *IEEE Transactions on Power Apparatus and Systems, Vol. PAS-92(3),* 871-876, May/June, 1973.

IEC 1634: 1995, IEC technical report: High-voltage switchgear and controlgear — use and handling of sulphur hexafluoride (SF_6) in high-voltage switchgear and controlgear.

IEEE Guide for Moisture Measurement and Control in SF_6 Gas-Insulated Equipment, IEEE Std. 1125-1993.

IEEE Guide for Gas-Insulated Substations, IEEE Std. C37.122.1-1993.

IEEE Standard for Gas-Insulated Substations, IEEE Std. C37.122-1993.

IEEE Guide to Specifications for Gas-Insulated, Electric Power Substation Equipment, IEEE Std. C37.123-1996.

IEC 517: 1990, Gas-insulated metal-enclosed switchgear for rated voltages of 72.5 kV and above (3rd ed.).

Jones, D. J., Kopejtkova, D., Kobayashi, S., Molony, T., O'Connell, P., and Welch, I. M., GIS in service — experience and recommendations, *Paper 23-104 of CIGRE General Meeting,* Paris, 1994.

Katchinski, U., Boeck, W., Bolin, P. C., DeHeus, A., Hiesinger, H., Holt, P.-A., Murayama, Y., Jones, J., Knudsen, O., Kobayashi, S., Kopejtkova, D., Mazzoleni, B., Pryor, B., Sahni, A. S., Taillebois, J.-P., Tschannen, C., and Wester, P., User guide for the application of gas-insulated switchgear (GIS) for rated voltages of 72.5 kV and above, *CIGRE Report 125,* Paris, April 1998.

Kawamura, T., Ishi, T., Satoh, K., Hashimoto, Y., Tokoro, K., and Harumoto, Y., Operating experience of gas-insulated switchgear (GIS) and its influence on the future substation design, *Paper 23-04 of CIGRE General Meeting,* Paris, 1982.

Kopejtkova, D., Malony, T., Kobayashi, S., and Welch, I. M., A twenty-five year review of experience with SF_6 gas-insulated substations (GIS), *Paper 23-101 of CIGRE General Meeting,* Paris, 1992.

Mauthe, G., Pryor, B. M., Neimeyer, L., Probst, R., Poblotzki, J., Bolin, P., O'Connell, P., and Henriot, J., SF_6 recycling guide: Re-use of SF_6 gas in electrical power equipment and final disposal, *CIGRE Report 117,* Paris, August, 1997.

© 2003 by CRC Press LLC

3

Air-Insulated Substations — Bus/Switching Configurations

3.1 Single Bus (Figure 3.1) 3-1
3.2 Double Bus, Double Breaker (Figure 3.2) 3-2
3.3 Main and Transfer Bus (Figure 3.3) 3-2
3.4 Double Bus, Single Breaker (Figure 3.4) 3-3
3.5 Ring Bus (Figure 3.5) 3-4
3.6 Breaker-and-a-Half (Figure 3.6) 3-5
3.7 Comparison of Configurations 3-5

Michael J. Bio
E.P. Breaux Electrical, Inc.

Various factors affect the reliability of a substation or switchyard, one of which is the arrangement of the buses and switching devices. In addition to reliability, arrangement of the buses/switching devices will impact maintenance, protection, initial substation development, and cost.

There are six types of substation bus/switching arrangements commonly used in air insulated substations:

1. Single bus
2. Double bus, double breaker
3. Main and transfer (inspection) bus
4. Double bus, single breaker
5. Ring bus
6. Breaker and a half

3.1 Single Bus (Figure 3.1)

This arrangement involves one main bus with all circuits connected directly to the bus. The reliability of this type of an arrangement is very low. When properly protected by relaying, a single failure to the main bus or any circuit section between its circuit breaker and the main bus will cause an outage of the entire system. In addition, maintenance of devices on this system requires the de-energizing of the line connected to the device. Maintenance of the bus would require the outage of the total system, use of standby generation, or switching to adjacent station, if available.

Since the single bus arrangement is low in reliability, it is not recommended for heavily loaded substations or substations having a high availability requirement. Reliability of this arrangement can be improved by the addition of a bus tiebreaker to minimize the effect of a main bus failure.

0-8493-1703-7/03/$0.00+$1.50

© 2003 by CRC Press LLC

© 2003 by CRC Press LLC

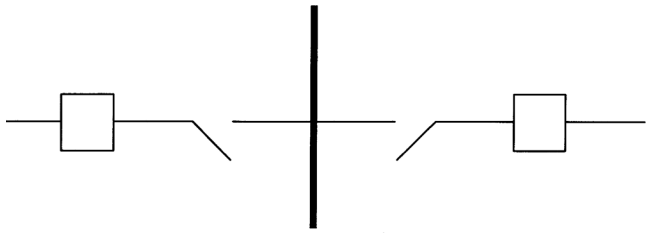

FIGURE 3.1 Single bus.

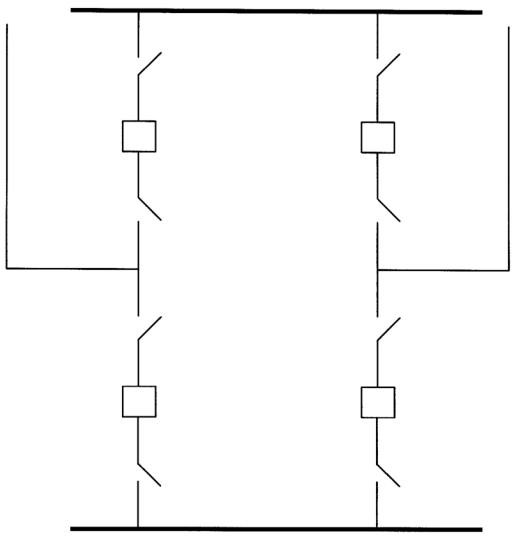

FIGURE 3.2 Double bus, double breaker.

3.2 Double Bus, Double Breaker (Figure 3.2)

This scheme provides a very high level of reliability by having two separate breakers available to each circuit. In addition, with two separate buses, failure of a single bus will not impact either line. Maintenance of a bus or a circuit breaker in this arrangement can be accomplished without interrupting either of the circuits.

This arrangement allows various operating options as additional lines are added to the arrangement; loading on the system can be shifted by connecting lines to only one bus.

A double bus, double breaker scheme is a high-cost arrangement, since each line has two breakers and requires a larger area for the substation to accommodate the additional equipment. This is especially true in a low profile configuration. The protection scheme is also more involved than a single bus scheme.

3.3 Main and Transfer Bus (Figure 3.3)

This scheme is arranged with all circuits connected between a main (operating) bus and a transfer bus (also referred to as an inspection bus). Some arrangements include a bus tie breaker that is connected between both buses with no circuits connected to it. Since all circuits are connected to the single, main bus, reliability of this system is not very high. However, with the transfer bus available during maintenance, de-energizing of the circuit can be avoided. Some systems are operated with the transfer bus normally de-energized.

© 2003 by CRC Press LLC

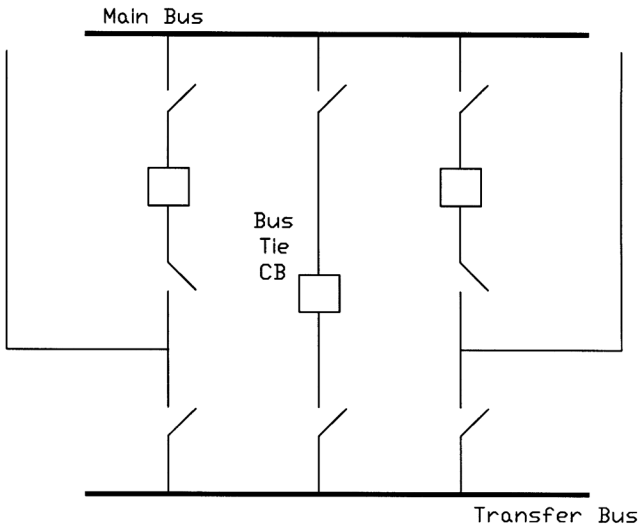

FIGURE 3.3 Main and transfer bus.

When maintenance work is necessary, the transfer bus is energized by either closing the tie breaker, or when a tie breaker is not installed, closing the switches connected to the transfer bus. With these switches closed, the breaker to be maintained can be opened along with its isolation switches. Then the breaker is taken out of service. The circuit breaker remaining in service will now be connected to both circuits through the transfer bus. This way, both circuits remain energized during maintenance. Since each circuit may have a different circuit configuration, special relay settings may be used when operating in this abnormal arrangement. When a bus tie breaker is present, the bus tie breaker is the breaker used to replace the breaker being maintained, and the other breaker is not connected to the transfer bus.

A shortcoming of this scheme is that if the main bus is taken out of service, even though the circuits can remain energized through the transfer bus and its associated switches, there would be no relay protection for the circuits. Depending on the system arrangement, this concern can be minimized through the use of circuit protection devices (reclosure or fuses) on the lines outside the substation.

This arrangement is slightly more expensive than the single bus arrangement, but does provide more flexibility during maintenance. Protection of this scheme is similar to that of the single bus arrangement. The area required for a low profile substation with a main and transfer bus scheme is also greater than that of the single bus, due to the additional switches and bus.

3.4 Double Bus, Single Breaker (Figure 3.4)

This scheme has two main buses connected to each line circuit breaker and a bus tie breaker. Utilizing the bus tie breaker in the closed position allows the transfer of line circuits from bus to bus by means of the switches. This arrangement allows the operation of the circuits from either bus. In this arrangement, a failure on one bus will not affect the other bus. However, a bus tie breaker failure will cause the outage of the entire system.

Operating the bus tie breaker in the normally open position defeats the advantages of the two main buses. It arranges the system into two single bus systems, which as described previously, has very low reliability.

Relay protection for this scheme can be complex, depending on the system requirements, flexibility, and needs. With two buses and a bus tie available, there is some ease in doing maintenance, but maintenance on line breakers and switches would still require outside the substation switching to avoid outages.

© 2003 by CRC Press LLC

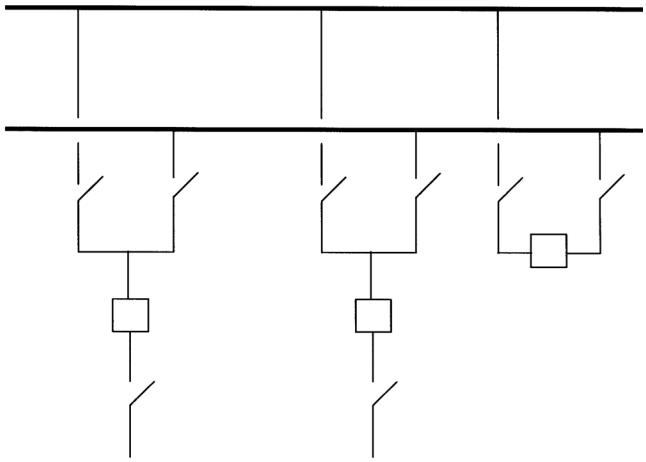

FIGURE 3.4 Double bus, single breaker.

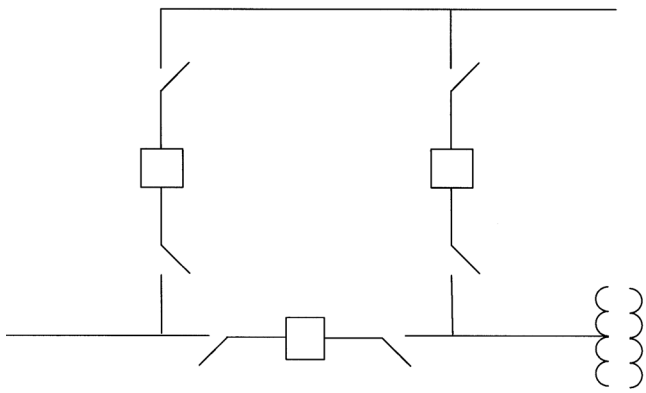

FIGURE 3.5 Ring bus.

3.5 Ring Bus (Figure 3.5)

In this scheme, as indicated by the name, all breakers are arranged in a ring with circuits tapped between breakers. For a failure on a circuit, the two adjacent breakers will trip without affecting the rest of the system. Similarly, a single bus failure will only affect the adjacent breakers and allow the rest of the system to remain energized. However, a breaker failure or breakers that fail to trip will require adjacent breakers to be tripped to isolate the fault.

Maintenance on a circuit breaker in this scheme can be accomplished without interrupting any circuit, including the two circuits adjacent to the breaker being maintained. The breaker to be maintained is taken out of service by tripping the breaker, then opening its isolation switches. Since the other breakers adjacent to the breaker being maintained are in service, they will continue to supply the circuits.

In order to gain the highest reliability with a ring bus scheme, load and source circuits should be alternated when connecting to the scheme. Arranging the scheme in this manner will minimize the potential for the loss of the supply to the ring bus due to a breaker failure.

Relaying is more complex in this scheme than some previously identified. Since there is only one bus in this scheme, the area required to develop this scheme is less than some of the previously discussed schemes. However, expansion of a ring bus is limited, due to the practical arrangement of circuits.

© 2003 by CRC Press LLC

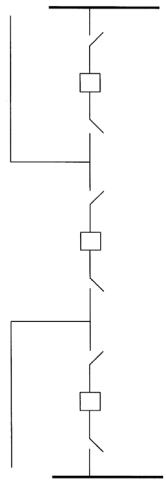

FIGURE 3.6 Breaker-and-a-half.

3.6 Breaker-and-a-Half (Figure 3.6)

The breaker-and-a-half scheme can be developed from a ring bus arrangement as the number of circuits increases. In this scheme, each circuit is between two circuit breakers, and there are two main buses. The failure of a circuit will trip the two adjacent breakers and not interrupt any other circuit. With the three breaker arrangement for each bay, a center breaker failure will cause the loss of the two adjacent circuits. However, a breaker failure of the breaker adjacent to the bus will only interrupt one circuit.

Maintenance of a breaker on this scheme can be performed without an outage to any circuit. Furthermore, either bus can be taken out of service with no interruption to the service.

This is one of the most reliable arrangements, and it can continue to be expanded as required. Relaying is more involved than some schemes previously discussed. This scheme will require more area and is costly due to the additional components.

3.7 Comparison of Configurations

In planning an electrical substation or switchyard facility, one should consider major parameters as discussed above: reliability, cost, and available area. Table 3.1 has been developed to provide specific items for consideration.

In order to provide a complete evaluation of the configurations described, other circuit-related factors should also be considered. The arrangement of circuits entering the facility should be incorporated in the total scheme. This is especially true with the ring bus and breaker-and-a-half schemes, since reliability in these schemes can be improved by not locating source circuits or load circuits adjacent to each other. Arrangement of the incoming circuits can add greatly to the cost and area required.

Also, the profile of the facility can add significant cost and area to the overall project. A high-profile facility can incorporate multiple components on fewer structures. Each component in a low-profile layout requires a single area, thus necessitating more area for an arrangement similar to a high-profile facility.

Therefore, a four-circuit, high-profile ring bus may require less area and be less expensive than a four-circuit, low-profile main and transfer bus arrangement.

© 2003 by CRC Press LLC

TABLE 3.1 Comparison of Configurations

Configuration	Reliability	Cost	Available Area
Single bus	Least reliable — single failure can cause complete outage	Least cost (1.0) — fewer components	Least area — fewer components
Double bus	Highly reliable — duplicated components; single failure normally isolates single component	High cost (1.8) — duplicated components	Greater area — twice as many components
Main bus and transfer	Least reliable — same as *Single bus*, but flexibility in operating and maintenance with transfer bus	Moderate cost (1.76) — fewer components	Low area requirement — fewer components
Double bus, single breaker	Moderately reliable — depends on arrangement of components and bus	Moderate cost (1.78) — more components	Moderate area — more components
Ring bus	High reliability — single failure isolates single component	Moderate cost (1.56) — more components	Moderate area — increases with number of circuits
Breaker-and-a-half	Highly reliable — single circuit failure isolates single circuit, bus failures do not affect circuits	Moderate cost (1.57) — breaker-and-a-half for each circuit	Greater area — more components per circuit

Note: The number shown in parenthesis is a per unit amount for comparison of configurations.

© 2003 by CRC Press LLC

4

High-Voltage Switching Equipment

4.1 Ambient Conditions 4-1
4.2 Disconnect Switches 4-1
4.3 Load Break Switches 4-2
4.4 High-Speed Grounding Switches 4-2
4.5 Power Fuses 4-3
4.6 Circuit Switchers 4-3
4.7 Circuit Breakers 4-4
4.8 GIS Substations 4-6
4.9 Environmental Concerns 4-6
References 4-6

David L. Harris
Waukesha Electric Systems

The design of the high-voltage substation must include consideration for the safe operation and maintenance of the equipment. Switching equipment is used to provide isolation, no load switching, load switching, and/or interruption of fault currents. The magnitude and duration of the load and fault currents will be significant in the selection of the equipment used.

System operations and maintenance must also be considered when equipment is selected. One significant choice is the decision of single-phase or three-phase operation. High-voltage power systems are generally operated as a three-phase system, and the imbalance that will occur when operating equipment in a single-phase mode must be considered.

4.1 Ambient Conditions

Air-insulated high-voltage electrical equipment is generally covered by standards based on assumed ambient temperatures and altitudes. Ambient temperatures are generally rated over a range from –40°C to +40°C for equipment that is air insulated and dependent on ambient cooling. Altitudes above 1000 meters (3300 feet) may require derating.

At higher altitudes, air density decreases, hence the dielectric strength is also reduced and derating of the equipment is recommended. Operating (strike distances) clearances must be increased to compensate for the reduction in dielectric strength of the ambient air. Also, current ratings generally decrease at higher elevations due to the decreased density of the ambient air, which is the cooling medium used for dissipation of the heat generated by the load losses associated with load current levels.

4.2 Disconnect Switches

A disconnect switch is a mechanical device used to change connections within a circuit or isolate a circuit from its power source, and is normally used to provide isolation of the substation equipment for

0-8493-1703-7/03/$0.00+$1.50

© 2003 by CRC Press LLC

© 2003 by CRC Press LLC

maintenance. Typically a disconnect switch would be installed on each side of a piece of equipment to provide a visible confirmation that the power conductors have been opened for personnel safety. Once the switches are placed in the open position, safety grounds can be attached to the de-energized equipment for worker protection. Switches can be equipped with grounding blades to perform the safety grounding function.

Disconnect switches are designed to continuously carry load currents and momentarily carry higher capacity for short-circuit currents for a specified duration (typically specified in seconds). They are designed for no load switching, opening or closing circuits where negligible currents are made or interrupted, or when there is no significant voltage across the open terminals of the switch. They are relatively slow-speed operating devices and therefore are not designed for arc interruption. Disconnect switches are also installed to bypass breakers or other equipment for maintenance and can also be used for bus sectionalizing. Interlocking equipment is available to prevent inadvertent operating sequence by inhibiting operation of the disconnect switch operation until the fault and/or load currents have been interrupted by the appropriate equipment.

Single-phase or three-phase operation is possible for some switches. Operating mechanisms are normally installed to permit operation of the disconnect switch by an operator standing at ground level. The operating mechanisms provide a swing arm or gearing to permit operation with reasonable effort by utility personnel. Motor operating mechanisms are also available and are applied when remote switching is necessary.

Disconnect switch operation can be designed for vertical or horizontal operating of the switch blades. Several configurations are frequently used for switch applications including:

- Vertical break
- Double break switches
- V switches
- Center break switches
- Hook stick switches
- Vertical reach switches
- Grounding switches

Phase spacing is usually adjusted to satisfy the spacing of the bus system installed in the substation.

4.3 Load Break Switches

A load break switch is a disconnect switch that has been designed to provide making or breaking of specified currents. This is accomplished by addition of equipment that increases the operating speed of the disconnect switch blade and the addition of some type of equipment to alter the arcing phenomena and allow the safe interruption of the arc resulting when switching load currents.

Disconnect switches can be supplied with equipment to provide a limited load switching capability. Arcing horns, whips, and spring actuators are typical at lower voltages. These switches are used to de-energize or energize a circuit that possesses some limited amount of magnetic or capacitive current, such as transformer exciting current or line charging currents.

An air switch can be modified to include a series interrupter (typically vacuum or SF6) for higher voltage and current interrupting levels. These interrupters increase the load break capability of the disconnect switch and can be applied for switching load or fault currents of the associated equipment.

4.4 High-Speed Grounding Switches

Automatic high-speed grounding switches are applied for protection of transformer banks when the cost of supplying other protective equipment is too costly. The switches are generally actuated by discharging a spring mechanism to provide the "high-speed" operation. The grounding switch operates to provide

© 2003 by CRC Press LLC

a deliberate ground on the high-voltage bus supplying the equipment (generally a transformer bank), which is detected by protective relaying equipment remotely, and operates the transmission line breakers at the remote end of the line supplying the transformer. This scheme also imposes a voltage interruption to all other loads connected between the same remote breakers. A motor-operated disconnect switch is frequently installed along with a relay system to sense bus voltage and allow operation of a motor-operated disconnect switch when there is no voltage on the transmission line to provide automatic isolation of the faulted bank, and allow reclosing operation of the remote breaker to restore service to the transmission line.

The grounding switch scheme is dependent on the ability of the source transmission line relay protection scheme to recognize and clear the fault by opening the remote line circuit breaker. Clearing times are necessarily longer since the fault levels are not normally within the levels appropriate for an instantaneous trip response. The lengthening of the trip time also imposes additional stress on the equipment being protected and should be considered when selecting this method for bank protection. Grounding switches are usually considered when relative fault levels are low so that there is not the risk of significant damage to the equipment with the associated extended trip times.

4.5 Power Fuses

Power fuses are a generally accepted means of protecting power transformers in distribution substations. The primary purpose of a power fuse is to provide interruption of permanent faults. Fusing is an economical alternative to circuit switcher or circuit breaker protection. Fuse protection is generally limited to voltages from 34.5 kV through 69 kV, but has been applied for protection of 115-kV and 138-kV transformers.

To provide the greatest protective margin, it is necessary to use the smallest fuse rating possible. The advantage of close fusing is the ability of the fuse unit to provide backup protection for some secondary faults. For the common delta-wye connected transformer, a fusing ratio of 1.0 would provide backup protection for a phase-to-ground fault as low as 230% of the secondary full-load rating. Fusing ratio is defined as the ratio of the fuse rating to the transformer full load current rating. With low fusing ratios, the fuse may also provide backup protection for line-to-ground faults remote to the substation on the distribution network.

Fuse ratings also must consider parameters other than the full load current of the transformer being protected. Coordination with other overcurrent devices, accommodation of peak overloadings, and severe duty may require increased ratings of the fuse unit. The general purpose of the power transformer fuse is to accommodate, not interrupt, peak loads. Fuse ratings must consider the possibility of nuisance trips if the rating selected is too low for all possible operating conditions.

The concern of unbalanced voltages in a three-phase system must be considered when selecting fusing for power transformer protection. The possibility of one or two fuses blowing must be reviewed. Unbalanced voltages can cause tank heating in three-phase transformers and overheating and damage to three-phase motor loads. The potential for ferroresonance must be considered for some transformer configurations when using fusing.

Fuses are available in a number of tripping curves (standard, slow, and very slow) to provide coordination with other system protective equipment. Fuses are not voltage-critical; they may be applied at any voltage equal to or greater than their rated voltage. Fuses may not require additional structures, and are generally mounted on the incoming line structure, resulting in space savings in the substation layout.

4.6 Circuit Switchers

Circuit switchers have been developed to overcome some of the limitations of fusing for substation transformers. They are designed to provide three-phase interruption (solving the unbalanced voltage considerations) and provide protection for transient overvoltages and overloads at a competitive cost

© 2003 by CRC Press LLC

between the costs of fuses and circuit breakers. Additionally, they can provide protection from transformer faults based on differential, sudden pressure, and overcurrent relay schemes as well as critical operating constraints such as low oil level, high oil or winding temperature, pressure relief device operation, and others.

Circuit switchers are designed and supplied as a combination of a circuit breaking interrupter and an isolating disconnect switch. Later models have been designed with improved interrupters that have reduced the number of gaps and eliminated the necessity of the disconnect switch blades in series with the interrupter. Interrupters are now available in vertical or horizontal mounting configurations, with or without an integral disconnect switch. Circuit switchers have been developed for applications involving protection of power transformers, lines, capacitors, and line connected or tertiary connected shunt reactors.

Circuit switchers are an alternative to the application of circuit breakers for equipment protection. Fault duties may be lower and interrupting times longer than a circuit breaker. Some previous designs employed interrupters with multiple gaps and grading resistors and the integral disconnect switch as standard. The disconnect switch was required to provide open-circuit isolation in some earlier models of circuit switchers.

Circuit switchers originally were intended to be used for transformer primary protection. Advancements in the interrupter design have resulted in additional circuit switcher applications, including:

- Line and switching protection
- Cable switching and protection
- Single shunt capacitor bank switching and protection
- Shunt reactor switching and protection (line connected or tertiary connected reactors)

4.7 Circuit Breakers

A circuit breaker is defined as "a mechanical switching device capable of making, carrying and breaking currents under normal circuit conditions and also making, carrying and breaking for a specified time, and breaking currents under specified abnormal circuit conditions such as a short circuit" (IEEE Std. C37.100-1992).

Circuit breakers are generally classified according to the interrupting medium used to cool and elongate the electrical arc permitting interruption. The types are:

- Air magnetic
- Oil
- Air blast
- Vacuum
- SF6 gas

Air magnetic circuit breakers are limited to older switchgear and have generally been replaced by vacuum or SF6 for switchgear applications. Vacuum is used for switchgear applications and some outdoor breakers, generally 38 kV class and below. Air blast breakers, used for high voltages (≥765 kV), are no longer manufactured and have been replaced by breakers using SF6 technology.

Oil circuit breakers have been widely used in the utility industry in the past but have been replaced by other breaker technologies for newer installations. Two designs exist — bulk oil (dead-tank designs) dominant in the U.S.; and oil minimum breaker technology (live-tank design). Bulk oil circuit breakers were designed as single-tank or three-tank mechanisms; generally, at higher voltages, three-tank designs were dominant. Oil circuit breakers were large and required significant foundations to support the weight and impact loads occurring during operation. Environmental concerns forcing the necessity of oil retention systems, maintenance costs, and the development of the SF6 gas circuit breaker have led to the gradual replacement of the oil circuit breaker for new installations.

© 2003 by CRC Press LLC

Oil circuit breaker development has been relatively static for many years. The design of the interrupter employs the arc caused when the contacts are parted and the breaker starts to operate. The electrical arc generates hydrogen gas due to the decomposition of the insulating mineral oil. The interrupter is designed to use the gas as a cooling mechanism to cool the arc and to use the pressure to elongate the arc through a grid (arc chutes), allowing extinguishing of the arc when the current passes through zero.

Vacuum circuit breakers use an interrupter that is a small cylinder enclosing the moving contacts under a high vacuum. When the contacts part, an arc is formed from contact erosion. The arc products are immediately forced to and deposited on a metallic shield surrounding the contacts. Without anything to sustain the arc, it is quickly extinguished.

Vacuum circuit breakers are widely employed for metal-clad switchgear up to 38 kV class. The small size of the breaker allows vertically stacked installations of breakers in a two-high configuration within one vertical section of switchgear, permitting significant savings in space and material compared to earlier designs employing air magnetic technology. When used in outdoor circuit breaker designs, the vacuum cylinder is housed in a metal cabinet or oil-filled tank for dead tank construction popular in the U.S. market.

Gas circuit breakers generally employ SF6 (sulfur hexaflouride) as an interrupting and sometimes as an insulating medium. In "single puffer" mechanisms, the interrupter is designed to compress the gas during the opening stroke and use the compressed gas as a transfer mechanism to cool the arc and to elongate the arc through a grid (arc chutes), allowing extinguishing of the arc when the current passes through zero. In other designs, the arc heats the SF6 gas and the resulting pressure is used for elongating and interrupting the arc. Some older two-pressure SF6 breakers employed a pump to provide the high-pressure SF6 gas for arc interruption.

Gas circuit breakers typically operate at pressures between six and seven atmospheres. The dielectric strength of SF6 gas reduces significantly at lower pressures, normally as a result of lower ambient temperatures. Monitoring of the density of the SF6 gas is critical and some designs will block operation of the circuit breaker in the event of low gas density.

Circuit breakers are available as live-tank or dead-tank designs. Dead-tank designs put the interrupter in a grounded metal enclosure. Interrupter maintenance is at ground level and seismic withstand is improved vs. the live-tank designs. Bushings are used for line and load connections which permit installation of bushing current transformers for relaying and metering at a nominal cost. The dead-tank breaker does require additional insulating oil or gas to provide the insulation between the interrupter and the grounded tank enclosure.

Live-tank circuit breakers consist of an interrupter chamber that is mounted on insulators and is at line potential. This approach allows a modular design as interrupters can be connected in series to operate at higher voltage levels. Operation of the contacts is usually through an insulated operating rod or rotation of a porcelain insulator assembly by an operator at ground level. This design minimizes the quantity of oil or gas used for interrupting the arc as no additional quantity is required for insulation of a dead-tank enclosure. The design also readily adapts to the addition of pre-insertion resistors or grading capacitors when they are required. Seismic capability requires special consideration due to the high center of gravity of the interrupting chamber assembly.

Interrupting times are usually quoted in cycles and are defined as the maximum possible delay between energizing the trip circuit at rated control voltage and the interruption of the main contacts in all poles. This applies to all currents from 25 to 100% of the rated short-circuit current.

Circuit breaker ratings must be examined closely. Voltage and interrupting ratings are stated at a maximum operating voltage rating, i.e., 38 kV voltage rating for a breaker applied on a nominal 34.5-kV circuit. The breakers have an operating range designated as K factor per IEEE C37.06, (see Table 3 in the document's appendix). For a 72-kV breaker, the voltage range is 1.21, indicating that the breaker is capable of its full interrupting rating down to a voltage of 60 kV.

Breaker ratings need to be checked for some specific applications. Applications requiring reclosing operation should be reviewed to be sure that the duty cycle of the circuit breaker is not being exceeded.

© 2003 by CRC Press LLC

Some applications for out-of-phase switching or back-to-back switching of capacitor banks also require review and may require specific-duty circuit breakers to insure proper operation of the circuit breaker during fault interruption.

4.8 GIS Substations

Advancements in the use of SF6 as an insulating and interrupting medium have resulted in the development of gas insulated substations. Environmental and/or space limitations may require the consideration of GIS (gas-insulated substation) equipment. This equipment utilizes SF6 as an insulating and interrupting medium and permits very compact installations.

Three-phase or single-phase bus configurations are normally available up to 145 kV class, and single-phase bus to 500 kV and higher, and all equipment (disconnect/isolating switches, grounding switches, circuit breakers, metering current, and potential transformers, etc.) are enclosed within an atmosphere of SF6 insulating gas. The superior insulating properties of SF6 allow very compact installations.

GIS installations are also used in contaminated environments and as a means of deterring animal intrusions. Although initial costs are higher than conventional substations, a smaller substation footprint can offset the increased initial costs by reducing the land area necessary for the substation.

4.9 Environmental Concerns

Environmental concerns will have an impact on the siting, design, installation, maintenance, and operation of substation equipment.

Sound levels, continuous as well as momentary, can cause objections. The operation of a disconnect switch, switching cables, or magnetizing currents of a transformer will result in an audible noise associated with the arc interruption in air. Interrupters can be installed to mitigate this noise. Closing and tripping of a circuit breaker will result in an audible momentary sound from the operating mechanism. Transformers and other magnetic equipment will emit continuous audible noise.

Oil insulated circuit breakers and power transformers may require the installation of systems to contain or control an accidental discharge of the insulating oil and prevent accidental migration beyond the substation site. Lubricating oils and hydraulic fluids should also to be considered in the control/containment decision.

References

American National Standard for Switchgear — AC High-Voltage, IEEE Std. C37.06-1997, Circuit Breakers Rated on a Symmetrical Current Basis — Preferred Ratings and Related Required Capabilities.

IEEE Guide for Animal Deterrents for Electric Power Supply Substations, IEEE Std. 1264-1993.

IEEE Guide for Containment and Control and Containment of Oil Spills in Substations, IEEE Std. 980-1994.

IEEE Guide for the Design, Construction and Operation of Safe and Reliable Substations for Environmental Acceptance, IEEE Std. 1127-1998.

IEEE Guide for Gas-Insulated Substations, IEEE Std. C37.122.1-1993.

IEEE Standards Collection: Power and Energy — Substations, 1998.

IEEE Standards Collection: Power and Energy — Switchgear, 1998.

IEEE Standard for Interrupter Switches for Alternating Current, Rated Above 1000 Volts, IEEE Std. 1247-1998.

IEEE Standard Definitions for Power Switchgear, IEEE Std. C37.100-1992.

IEEE Standard for Gas-Insulated Substations, IEEE Std. C37.122-1993.

© 2003 by CRC Press LLC

5

High-Voltage Power Electronic Substations

Gerhard Juette
Siemens AG (retired)

Asok Mukherjee
Siemens AG

5.1 Converter Stations (HVDC) 5-2
5.2 FACTS Controllers 5-5
5.3 Control and Protection System 5-10
5.4 Losses and Cooling 5-16
5.5 Civil Works 5-16
5.6 Reliability and Availability 5-17
5.7 Future Trends 5-18
References 5-18

The preceding sections on gas-insulated substations (GIS), air-insulated substations (AIS), and high-voltage switching equipment apply in principle also to the ac circuits in high-voltage power electronic substations. This section focuses on the specifics of power electronics as applied in substations for power transmission purposes.

The dramatic development of power electronics in the past decades has led to significant progress in electric power transmission technology, resulting in special types of transmission systems, which require special kinds of substations. The most important high-voltage power electronic substations are converter stations, above all for high-voltage direct current (HVDC) transmission systems, and controllers for flexible ac transmission systems (FACTS).

High-voltage power electronic substations consist essentially of the main power electronic equipment, i.e., converter valves and FACTS controllers with their dedicated cooling systems. Furthermore, in addition to the familiar components of conventional substations covered in the preceding sections, there are also converter transformers and reactive power compensation equipment, including harmonic filters, buildings, and auxiliaries.

Most high-voltage power electronic substations are air insulated, although some use combinations of air and gas insulation. Typically, passive harmonic filters and reactive power compensation equipment are air insulated and outdoors, while power electronic equipment (converter valves, FACTS controllers), control and protection electronics, active filters, and most communication and auxiliary systems are air insulated, but indoors.

Basic community considerations, grounding, lightning protection, seismic protection, and general fire protection requirements apply as with other substations. In addition, high-voltage power electronic substations may emit electric and acoustic noise and therefore require special shielding. Extra fire protection is applied as a special precaution because of the high power density in the electronic circuits, although the individual components of today are mostly nonflammable and the materials used for insulation or barriers within the power electronic equipment are flame retardant.

0-8493-1703-7/03/$0.00+$1.50
© 2003 by CRC Press LLC

© 2003 by CRC Press LLC

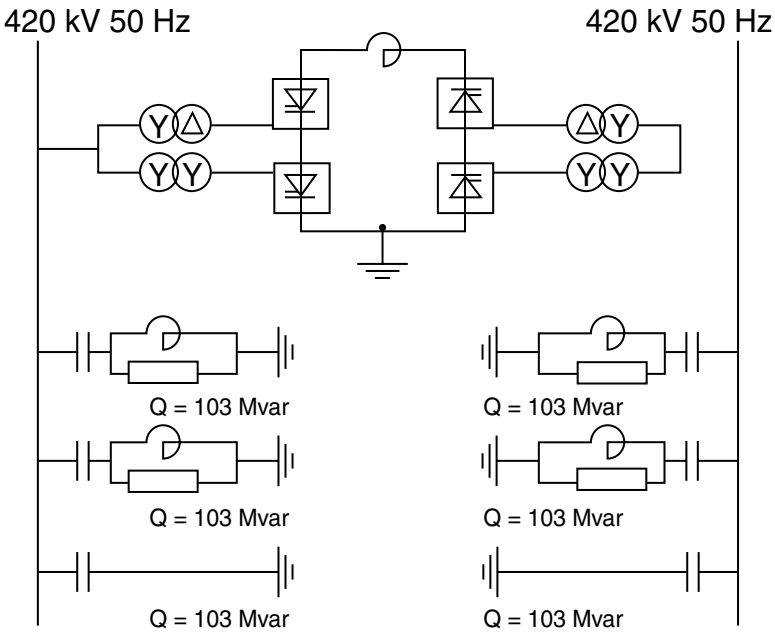

FIGURE 5.1 Schematic diagram of an HVDC back-to-back converter station, rated 600 NW.

International technical societies like IEEE, IEC, and CIGRE continue to develop technical standards, disseminate information, maintain statistics, and facilitate the exchange of know-how in this high-tech power engineering field. Within the IEEE, the group that deals with high-voltage power electronic substations is the IEEE Power Engineering Society (PES) Substations Committee, High Voltage Power Electronics Stations Subcommittee. On the Internet, it can be reached through the IEEE site (www.ieee.org).

5.1 Converter Stations (HVDC)

Power converters make possible the exchange of power between systems with different constant or variable frequencies. The most common converter stations are ac-dc converters for high-voltage direct current (HVDC) transmission. HVDC offers frequency- and phase-independent short- or long-distance overhead or underground bulk power transmission with fast controllability. Two basic types of HVDC converter stations exist: back-to-back ac-dc-ac converter stations and long-distance dc transmission terminal stations.

Back-to-back converters are used to transmit power between nonsynchronous ac systems. Such connections exist, for example, between the western and eastern grids of North America, with the ERCOT system of Texas, with the grid of Quebec, and between the 50-Hz and 60-Hz grids in South America and Japan. With these back-to-back HVDC converters, the dc voltage and current ratings are chosen to yield optimum converter costs. This aspect results in relatively low dc voltages, up to about 200 kV, at power ratings up to several hundred megawatts. Figure 5.1 shows the schematic diagram of an HVDC back-to-back converter station with a dc smoothing reactor and reactive power compensation elements (including ac harmonic filters) on both ac buses. The term back-to-back indicates that rectifier (ac to dc) and inverter (dc to ac) are located in the same station.

Long-distance dc transmission terminal stations terminate dc overhead lines or cables and link them to ac buses and systems. Their converter voltages are governed by transmission efficiency considerations and can exceed 1 million V (±500 kV) with power ratings up to several thousands of megawatts. Typically,

© 2003 by CRC Press LLC

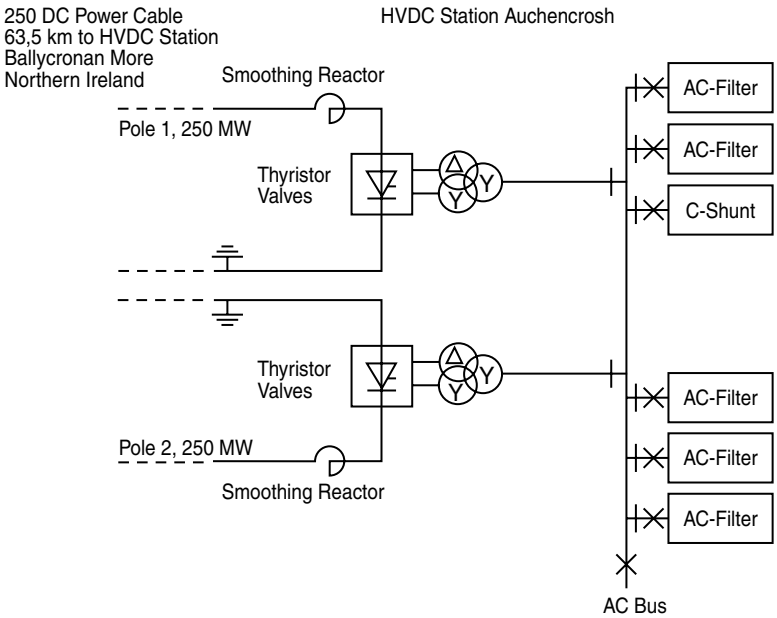

FIGURE 5.2 Schematic diagram of the Auchencrosh terminal station of the Scotland-Ireland HVDC cable transmission.

in large HVDC terminals, the two poles of a bipolar system can be operated independently, so that in case of component or equipment failures on one pole, power transmission with a part of the total rating can still be maintained. Figure 5.2 shows the schematic diagram of one such bipolar HVDC sea cable link with two 250-MW converter poles and 250-kV dc cables.

Most HVDC converters of today are line-commutated 12-pulse converters. Figure 5.3 shows a typical 12-pulse bridge circuit using delta and wye transformer windings, which eliminate some of the harmonics typical for a 6-pulse Graetz bridge converter. The harmonic currents remaining are absorbed by adequately designed ac harmonic filters that prevent these currents from entering the power systems. At the same time, these ac filters meet most or all of the reactive power demand of the converters. Converter stations connected to dc lines often need dc harmonic filters as well. Traditionally, passive filters have been used, consisting of passive components like capacitors, reactors, and resistors. More recently, because of their superior performance, active (electronic) ac and dc harmonic filters [1–5] — as a supplement to passive filters — using IGBTs (insulated gate bipolar transistors) have been successfully implemented in some HVDC projects. IGBTs have also led to the recent development of self-commutated converters, also called voltage-sourced converters [6–8]. They do not need reactive power from the grid and require less harmonic filtering.

The ac system or systems to which a converter station is connected significantly impact its design in many ways. This is true for harmonic filters, reactive power compensation devices, fault duties, and insulation coordination. Weak ac systems (i.e., with low short-circuit ratios) represent special challenges for the design of HVDC converters [9]. Some stations include temporary overvoltage limiting devices consisting of MOV (metal oxide varistors) arresters with forced cooling for permanent connection, or using fast insertion switches [10].

HVDC systems, long-distance transmissions in particular, require extensive voltage insulation coordination, which can not be limited to the converter stations themselves. It is necessary to consider the configuration, parameters, and behavior of the ac grids on both sides of the HVDC, as well as the dc line connecting the two stations. Internal insulation of equipment such as transformers and bushings

© 2003 by CRC Press LLC

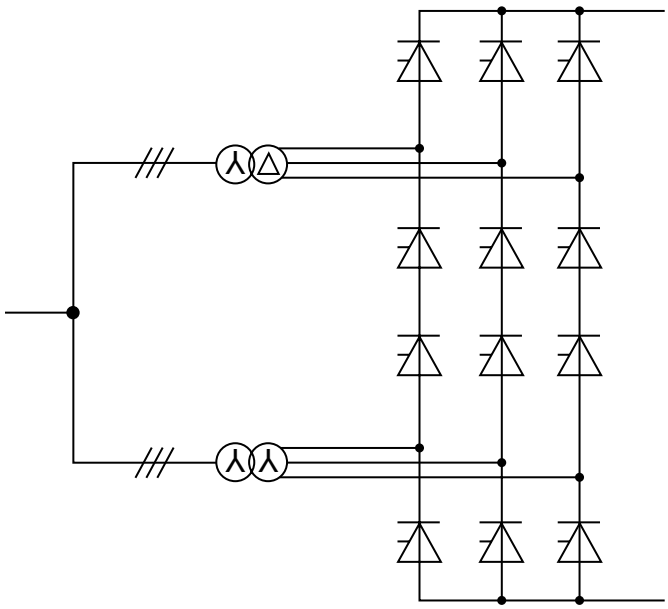

FIGURE 5.3 Transformers and valves in a 12-pulse converter bridge.

must take voltage gradient distribution in solid and mixed dielectrics into account. The main insulation of a converter transformer has to withstand combined ac and dc voltage stresses. Substation clearances and creepage distances must be adequate. Standards for indoor and outdoor clearances and creepage distances are being promulgated [11]. Direct-current electric fields are static in nature, thus enhancing the pollution of exposed surfaces. This pollution, particularly in combination with water, can adversely influence the voltage-withstand capability and voltage distribution of the insulating surfaces. In converter stations, therefore, it is often necessary to engage in adequate cleaning practices of the insulators and bushings, to apply protective greases, and to protect them with booster sheds. Insulation problems with extra-high-voltage dc bushings continue to be a matter of concern and study [12, 13].

A specific issue with long-distance dc transmission is the use of ground return. Used during contingencies, ground (and sea) return can increase the economy and availability of HVDC transmission. The necessary electrodes are usually located at some distance from the station, with a neutral line leading to them. The related neutral bus, switching devices, and protection systems form part of the station. Electrode design depends on the soil or water conditions [14, 15]. The National Electric Safety Code (NESC) does not allow the use of earth as a permanent return conductor. Monopolar HVDC operation in ground-return mode is permitted only under emergencies and for a limited time. Also environmental issues are often raised in connection with HVDC submarine cables using sea water as a return path. This has led to the recent concept of metallic return path provided by a separate low-voltage cable. The IEEE-PES is working to introduce changes to the NESC to better meet the needs of HVDC transmission while addressing potential side effects to other systems.

Mechanical switching devices on the dc side of a typical bipolar long-distance converter station comprise metallic return transfer breakers (MRTB) and ground return transfer switches (GRTS). No true dc breakers exist, and dc fault currents are best and most swiftly interrupted by the converters themselves. MRTBs with limited dc current interrupting capability have been developed [16]. They include commutation circuits, i.e., parallel reactor/capacitor (L/C) resonance circuits that create artificial current zeroes across the breaker contacts. The conventional grid-connecting equipment in the ac switchyard of a converter station is covered in the preceding sections. In addition, reactive power compensation and harmonic filter equipment are connected to the ac buses of the converter station. Circuit breakers used

© 2003 by CRC Press LLC

FIGURE 5.4 A 200 MW HVDC back-to-back converter station at Sidney, Nebraska (photo courtesy of Siemens).

for switching these shunt capacitors and filters must be specially designed for capacitive switching. A back-to-back converter station does not need any mechanical dc switching device.

Figure 5.4 through Figure 5.7 show photos of different converter stations. The back-to-back station shown in Figure 5.4 is one of several asynchronous links between the western and eastern North American power grids. The photo shows the control building (next to the communication tower), the valve hall attached to it, the converter transformers on both sides, the ac filter circuits (near the centerline), and the ac buses (at the outer left and right) with the major reactive power compensation and temporary overvoltage (TOV) suppression equipment that was used in this low-short-circuit-ratio installation. The valve groups shown in Figure 5.5 are arranged back to back, i.e., across the aisle in the same room.

Figure 5.6 shows the valve hall of a ±500-kV long-distance transmission system, with valves suspended from the ceiling for better seismic-withstand capability. The converter station shown in Figure 5.7 is the south terminal of the Nelson River ±500-kV HVDC transmission system in Manitoba, Canada. It consists of two bipoles commissioned in stages from 1973 to 1985. The dc yard and line connections can be seen on the left side of the picture, while the 230-kV ac yard with harmonic filters and converter transformers is on the right side. In total, the station is rated at 3854 MW.

5.2 FACTS Controllers

The acronym FACTS stands for "flexible ac transmission systems." These systems add some of the virtues of dc, i.e., phase independence and fast controllability, to ac transmission by means of electronic controllers. Such controllers can be shunt or series connected or both. They represent variable reactances or ac voltage sources. They can provide load flow control and, by virtue of their fast controllability, damping of power swings or prevention of subsynchronous resonance (SSR).

Typical ratings of FACTS controllers range from about thirty to several hundred MVAr. Normally they are integrated in ac substations. Like HVDC converters, they require controls, cooling systems, harmonic filters, transformers, and related civil works.

Static VAr compensators (SVC) are the most common shunt-connected controllers. They are, in effect, variable reactances. SVCs have been used successfully for many years, either for load (flicker) compensation of large industrial loads (arc furnaces, for example) or for transmission compensation in utility systems. Figure 5.8 shows a schematic one-line diagram of an SVC, with one thyristor-controlled reactor,

© 2003 by CRC Press LLC

FIGURE 5.5 600 MW HVDC back-to-back converter valves (photo courtesy of Siemens).

two thyristor-switched capacitors, and one harmonic filter. The thyristor controller and switches provide fast control of the overall SVC reactance between its capacitive and inductive design limits. Due to the network impedance, this capability translates into dynamic bus voltage control. As a consequence, the SVC can improve transmission stability and increase power transmission limits across a given path. Harmonic filter and capacitor banks, reactors (normally air core), step-down transformers, breakers and disconnect switches on the high-voltage side, as well as heavy-duty buswork on the medium-voltage side characterize most SVC stations. A building or an e-house with medium-voltage wall bushings contains the power electronic (thyristor) controllers. The related cooler is usually located nearby.

A new type of controlled shunt compensator, a static compensator called STATCOM, uses voltage-sourced converters with high-power gate-turn-off thyristors (GTO), or IGBT [17, 18]. Figure 5.9 shows the related one-line diagram. STATCOM is the electronic equivalent of the classical (rotating) synchronous condenser, and one application of STATCOM is the replacement of old synchronous condensers. The need for high control speed and low maintenance can support this choice. Where the STATCOM's lack of inertia is a problem, it can be overcome by a sufficiently large dc capacitor. STATCOM requires

© 2003 by CRC Press LLC

FIGURE 5.6 Valve hall of a ±500 kV, 1200 MW long-distance HVDC Converter Station (photo courtesy of Siemens).

FIGURE 5.7 Dorsey terminal of the Nelson River HVDC transmission system (photo courtesy of Manitoba Hydro).

fewer harmonic filters and capacitors than an SVC, and no reactors at all. This makes the footprint of a STATCOM station significantly more compact than that of the more conventional SVC.

Like the classical fixed series capacitors (SC), thyristor-controlled series capacitors (TCSC) [19, 20] are normally located on insulated platforms, one per phase, at phase potential. Whereas the fixed SC

© 2003 by CRC Press LLC

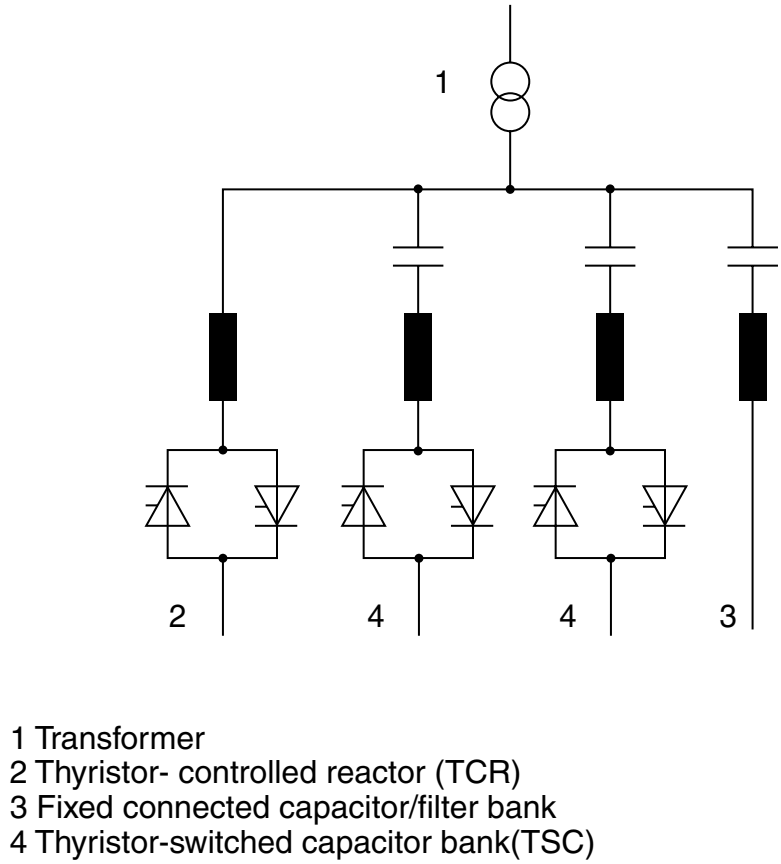

FIGURE 5.8 One-line diagram of a Static VAr Compensator (SVC).

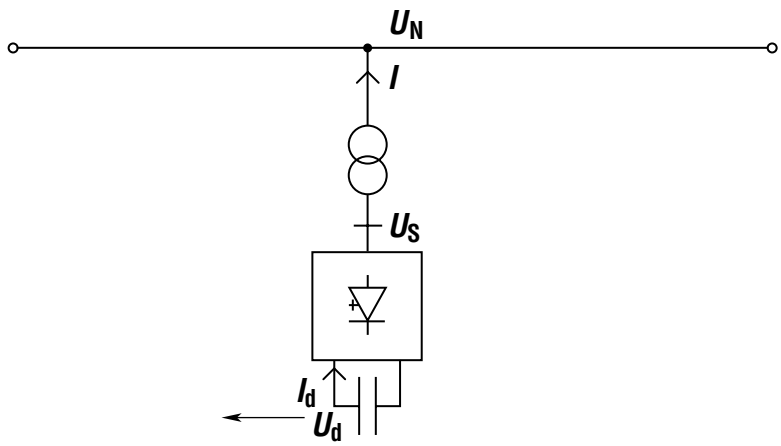

FIGURE 5.9 One-line diagram of a voltage sourced Static Compensator (STATCOM).

compensates a fixed portion of the line inductance, TCSC's effective capacitance and compensation level can be varied statically and dynamically. The variability is accomplished by a thyristor-controlled reactor connected in parallel with the main capacitor. This circuit and the related main protection and switching

© 2003 by CRC Press LLC

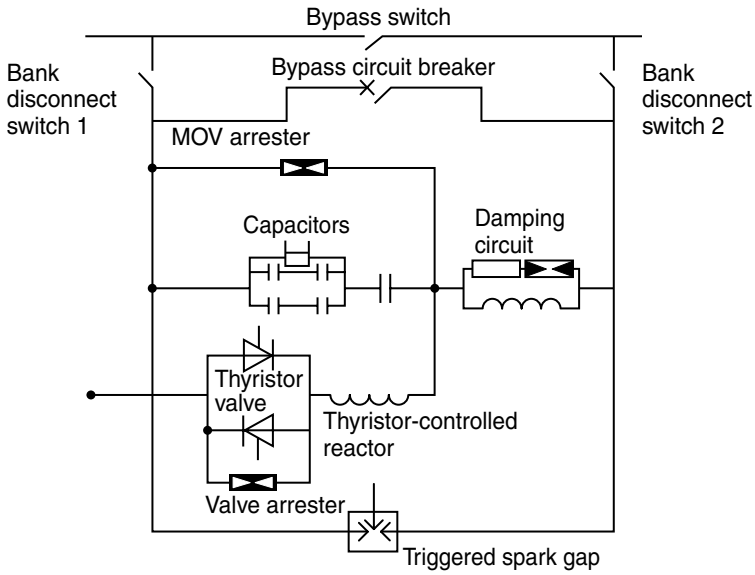

FIGURE 5.10 Schematic diagram of one phase of the Serra da Mesa (Brazil) Thyristor-controlled Series Capacitor (TCSC).

components are shown in Figure 5.10. The thyristors are located in weatherproof housings on the platforms. Communication links exist between the platforms and ground. Liquid cooling is provided through ground-to-platform pipes made of insulating material. Auxiliary platform power, where needed, is extracted from the line current via current transformers (CTs). Like most conventional SCs, TCSCs are typically integrated into existing substations. Upgrading an existing SC to TCSC is generally possible. A new development in series compensation is the thyristor-protected series compensator (TPSC). The circuit is basically the same as for TCSC, but without any controllable reactor and forced thyristor cooling. The thyristors of a TPSC are used only as a bypass switch to protect the capacitors against overvoltage, thereby avoiding large MOV arrester banks with relatively long cool-off intervals.

While SVC and STATCOM controllers are shunt devices, and TCSCs are series devices, the so-called unified power flow controller (UPFC) is a combination of both [21]. Figure 5.11 shows the basic circuit. The UPFC uses a shunt-connected transformer and a transformer with series-connected line windings, both interconnected to a dc capacitor via related voltage-source-converter circuitry within the control building. A more recent FACTS station project [22–24] involves similar shunt and series elements as the UPFC, and this can be reconfigured to meet changing system requirements. This configuration is called a convertible static compensator (CSC).

The ease with which FACTS stations can be reconfigured or even relocated is an important factor and can influence the substation design [25, 26]. Changes in generation and load patterns can make such flexibility desirable.

Figure 5.12 through Figure 5.17 show photos of FACTS substations. Figure 5.12 shows a 500-kV ac feeder (on the left side), the transformers (three single-phase units plus one spare), the medium-voltage bus, and three thyristor-switched capacitor (TSC) banks, as well as the building that houses the thyristor switches and controls.

The SVC shown in Figure 5.13 is connected to the 420-kV Norwegian ac grid southwest of Oslo. It uses thyristor-controlled reactors (TCR) and TSCs, two each, which are visible together with the 9.3-kV high-current buswork on the right side of the building.

Figure 5.14 and Figure 5.15 show photos of two 500-kV TCSC installations in the U.S. and Brazil, respectively. In both, the platform-mounted valve housings are clearly visible. Slatt (U.S.) has six equal

© 2003 by CRC Press LLC

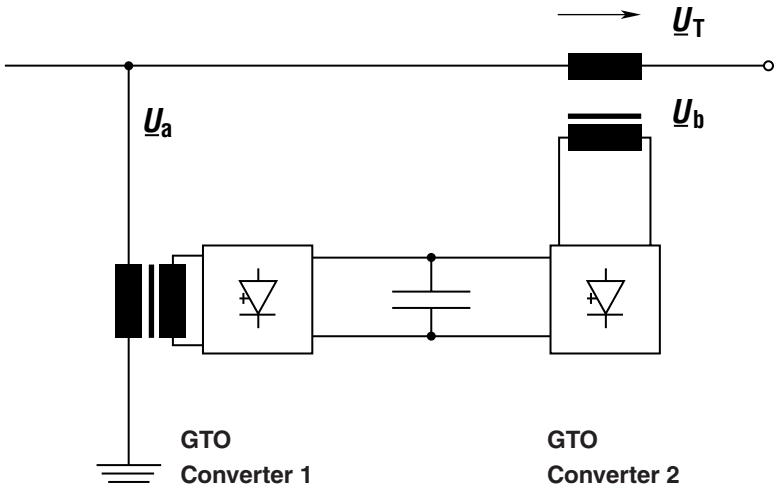

FIGURE 5.11 One-line diagram of a Unified Power Flow Controller (UPFC).

FIGURE 5.12 500 kV, 400 MVAr SVC at Adelanto, California (photo courtesy of Siemens).

TCSC modules per phase, with two valves combined in each of the three housings per bank. At Serra da Mesa (Brazil), each platform has one single valve housing.

Figure 5.16 shows an SVC being relocated. The controls and valves are in containerlike housings, which allow for faster relocation. Figure 5.17 shows the world's first UPFC, connected to AEP's Inez substation in eastern Kentucky. The main components are identified and clearly recognizable. Figure 5.18 depicts a CSC system at the 345-kV Marcy substation in New York state.

5.3 Control and Protection System

Today's state-of-the-art HVDC and FACTS controls — fully digitized and processor-based — allow steady-state, quasi steady-state, dynamic, and transient control actions and provide important equipment

© 2003 by CRC Press LLC

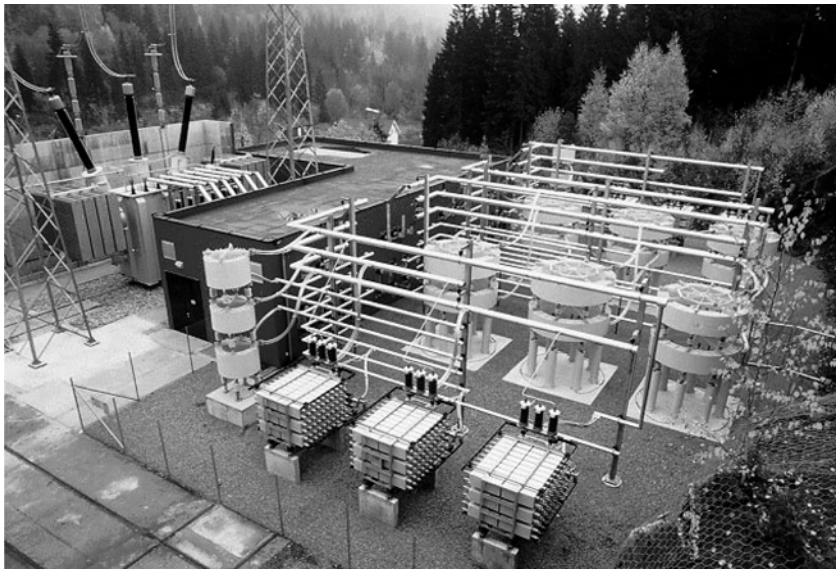

FIGURE 5.13 420 kV, ±160 MVAr SVC at Sylling, Norway (photo courtesy of ABB).

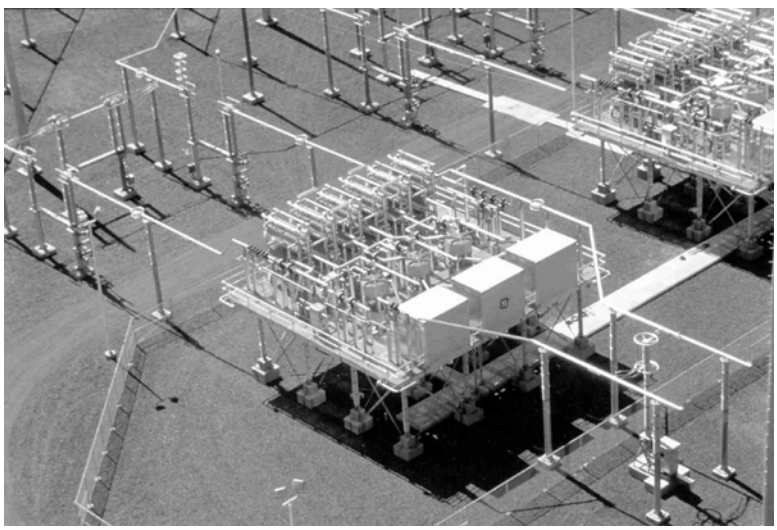

FIGURE 5.14 Aerial view of BPA's Slatt, Oregon, 500kV TCSC (photo courtesy of GE).

and system protection functions. Fault monitoring and sequence-of-event recording devices are used in most power electronics stations. Typically, these stations are remotely controlled and offer full local controllability as well. Man-machine interfaces are highly computerized, with extensive supervision and control via monitor and keyboard. All of these functions exist in addition to the basic substation secondary systems described in Chapters 6 and 7.

HVDC control and protection algorithms are usually rather complex. Real power, reactive power, ac bus frequency and voltage, startup and shutdown sequences, contingency and fault-recovery sequences, remedial action schemes, modulation schemes for system oscillation and SSR damping, and loss of communication are some of the significant control parameters and conditions. Fast dynamic performance is standard. Special voltage vs. current (v/i) control characteristics are used for converters in multiterminal

© 2003 by CRC Press LLC

FIGURE 5.15 TCSC Serra da Mesa, FURNAS, Brazil, 500kV, 107MVAr, (1...3)x13.17W (photo courtesy of Siemens).

FIGURE 5.16 Static Var Compensator is relocated where the system needs it (photo courtesy of ALSTOM T&D Power Electronic Systems).

HVDC systems to allow safe operation even under loss of interstation communication. Furthermore, HVDC controls provide equipment and system protection, including thyristor overcurrent, thyristor overheating, and dc line fault protection. Control and protection reliability are enhanced through redundant and fault-tolerant design. HVDC stations can often be operated from different control centers.

Figure 5.19 illustrates the basic control levels and hierarchy used in one terminal of a bipolar HVDC long-distance transmission scheme. Valve control at process level is based on phase-angle control, i.e.,

© 2003 by CRC Press LLC

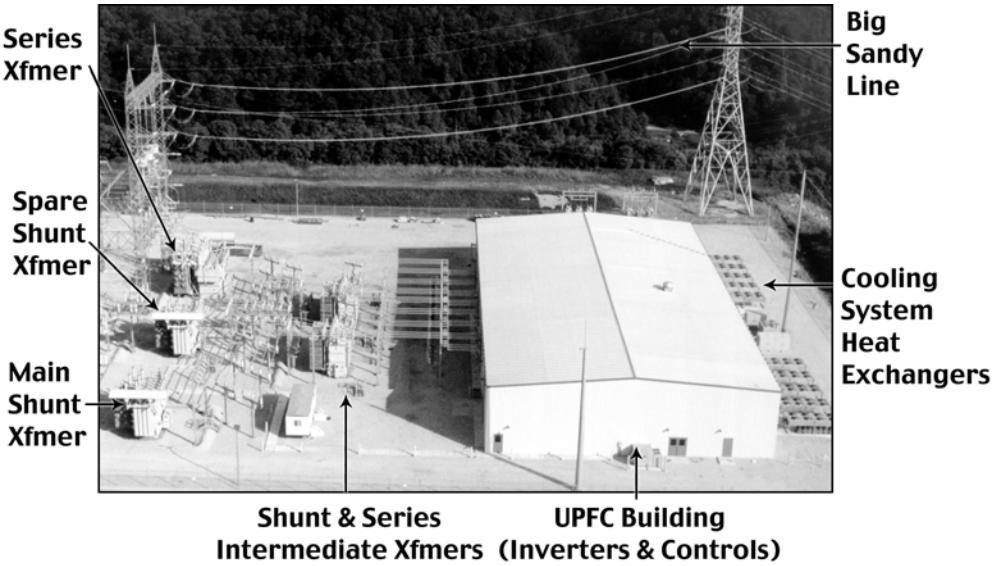

FIGURE 5.17 UPFC at Inez substation (photo courtesy of American Electric Power).

FIGURE 5.18 Convertible Static Compensator (CSC) at NYPA's 345kV Marcy, New York substation (photo courtesy of New York Power Authority).

gating of thyristors (or other semiconductors) precisely timed with respect to the related ac phase voltages. The phase angles determine the converter dc voltages and, per Ohm's law, dc currents and load flow.

Figure 5.20 shows the local control interface of a back-to-back HVDC converter station used for power transmission between nonsynchronous grids. Figure 5.21 shows a photo taken during the functional testing of the control and protection hardware against a real-time simulator for a major long-distance HVDC scheme. Figure 5.22 shows a typical control monitor screen layout displaying a bipolar HVDC system overview.

© 2003 by CRC Press LLC

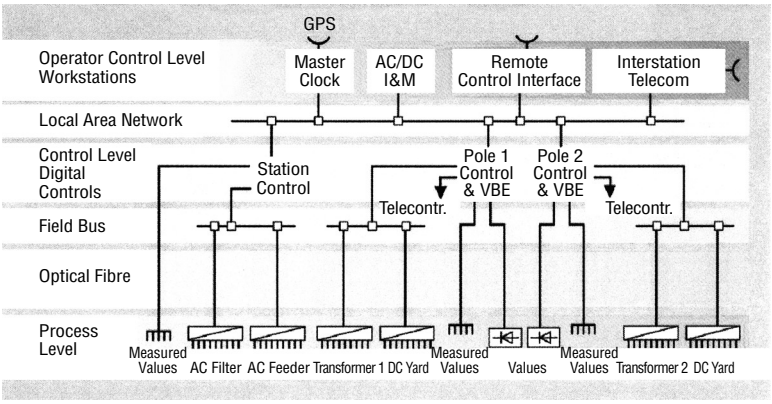

FIGURE 5.19 HVDC control hierarchy, one station.

FIGURE 5.20 Local control desk of a 600 MW back-to-back converter station (photo courtesy of Siemens).

The protection zones of one pole of an HVDC converter station are shown in Figure 5.23. Each protection zone is covered by at least two independent protective units — the primary protective unit and the secondary (backup) protective unit. Protection systems are separated from the control software and hardware. Some control actions are initiated by the protection scheme via signals to the control system.

The control and protection schemes of FACTS stations are tailored to the related circuits and tasks. Industrial SVCs have open-loop, direct, load-compensation control. In transmission systems, FACTS controllers are designed to provide closed-loop steady-state and dynamic control of reactive power and bus voltage, as well as some degree of load flow control, with modulation loops for stability and SSR mitigation. In addition, the controls include equipment and system protection functions.

With SVC and TCSC, the phase-angle control determines the effective shunt and series reactance, respectively. This fast reactance control, in turn, has the steady-state and dynamic effects listed above.

© 2003 by CRC Press LLC

FIGURE 5.21 Controls for a ±500 kV, 1800MW HVDC; function test (photo courtesy of Siemens).

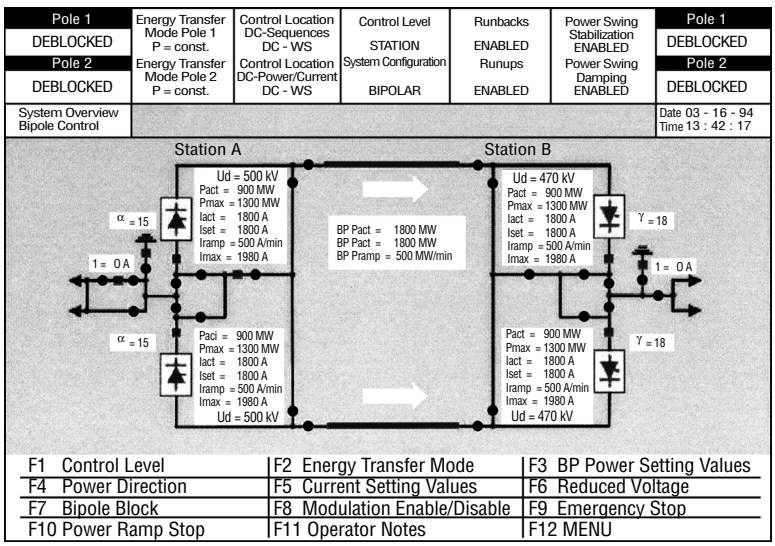

FIGURE 5.22 Operator workstation, typical screen layout for a bipolar HVDC system overview.

STATCOM control is phase-angle-based inverter ac voltage output control. The ac output is essentially in phase with the system voltage. The amplitude determines whether the STATCOM acts in a capacitive or inductive mode.

Most controllers included here have the potential to provide power system damping, i.e., to improve system stability. By the same token, if not properly designed, they may add to or even create system undamping, especially subsynchronous resonance (SSR). It is imperative to include proper attention to SSR in the control design and functional testing of power electronic stations, especially in the vicinity of existing or planned turbogenerators.

Principally, the control and protection systems described above comprise the following distinctive hardware and software subsystems:

- Valve firing and monitoring circuits
- Main (closed-loop) control
- Open-loop control (sequences, interlocks, etc.)

© 2003 by CRC Press LLC

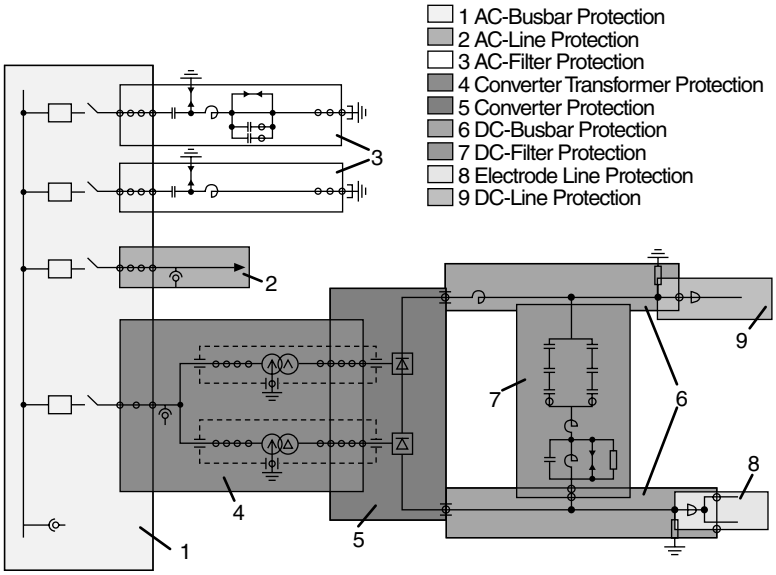

FIGURE 5.23 HVDC converter station protection zones (one pole).

- Protective functions
- Monitoring and alarms
- Diagnostic functions
- Operator interface and communications
- Data handling

5.4 Losses and Cooling

Valve losses in high-voltage power electronic substations are comparable in magnitude to those of the associated transformers. Typical HVDC converter efficiency exceeds 99%. This means that the losses in each terminal of a 1000-MW long-distance transmission system can approach 10 MW. Those of a 200-MW back-to-back station (both conversions ac-dc-ac in the same station) can be approximately 4 MW. The valves' share would be about 5 MW and 2 MW, respectively. Deionized water circulated in a closed loop is generally used as primary valve coolant. Various types of dry or evaporative secondary coolers dissipate the heat, usually into the surrounding air.

As opposed to the relatively broad distribution of losses in transformers, power electronic valve equipment includes areas of extreme loss density. Almost all losses occur in semiconductor wafers and snubber resistors. This loss density and the location of the converter valves inside a building make special cooling techniques necessary.

Standard procedures to determine and evaluate high-voltage power electronic substation losses, HVDC converter station losses in particular, have been developed [27].

5.5 Civil Works

High-voltage power electronic substations are special because of the valve rooms and buildings required for converters and controls, respectively. Insulation clearance requirements can lead to very large valve rooms (halls). The valves are connected to the yard through wall bushings. Converter transformers are often placed adjacent to the valve building, with the valve-side bushings penetrating through the walls in order to save space.

© 2003 by CRC Press LLC

The valves require controlled air temperature, humidity, and cleanness inside the valve room. Although the major part of the valve losses is handled by the valve cooling system, a fraction of the same is dissipated into the valve room and adds to its air-conditioning or ventilation load. The periodic fast switching of electronic converter and controller valves causes a wide spectrum of harmonic currents and electromagnetic fields, as well as significant audible noise. Therefore, valve rooms are usually shielded electrically with wire mesh in walls and windows. Electric interference with radio, TV, and communication systems can usually be controlled with power-line carrier filters and harmonic filters.

Sources of audible noise in a converter station include the transformers, capacitors, reactors, and coolers. To comply with the contractually specified audible noise limits within the building (e.g., in the control room) and outdoors (in the yard, at the substation fence), low-noise equipment, noise-damping walls, barriers, and special arrangement of equipment in the yard may be necessary. The theory of audible noise propagation is well understood [28], and analytical tools for audible noise design are available [29]. Specified noise limits can thus be met, but doing so may have an impact on total station layout and cost. Of course, national and local building codes also apply. In addition to the actual valve room and control building, power electronic substations typically include rooms for coolant pumps and water treatment, for auxiliary power distribution systems, air conditioning systems, battery rooms, and communication rooms.

Extreme electric power flow densities in the valves create a certain risk of fire. Valve fires with more or less severe consequences have occurred in the past [30]. Improved designs as well as the exclusive use of flame-retardant materials in the valve, coordinated with special fire detection and protection devices, reduce this risk to a minimum [31]. The converter transformers have fire walls in between and dedicated sprinkler systems around them as effective fire-fighting equipment.

Many high-voltage power electronic stations have spare transformers to minimize interruption times following a transformer failure. This leads to specific arrangements and bus configurations or extended concrete foundations and rail systems in some HVDC converter stations.

Some HVDC schemes use outdoor valves with individual housings. They avoid the cost of large valve buildings at the expense of a more complicated valve maintenance. TCSC stations also have similar valve housings on insulated platforms together with the capacitor banks and other equipment.

5.6 Reliability and Availability

Power electronic systems in substations have reached levels of reliability and availability comparable with the balance of substation components. System availability is influenced by forced outages due to component failures and by scheduled outages for preventive maintenance or other purposes. By means of built-in redundancy, detailed monitoring, self-supervision of the systems, segmentation and automatic switch-over strategies, together with consistent quality control and a prudent operation and maintenance philosophy, almost any level of availability is achievable. The stations are usually designed for unmanned operation. The different subsystems are subjected to an automatic internal control routine, which logs and evaluates any deviations or abnormalities and relays them to remote control centers for eventual actions if necessary. Any guaranteed level of availability is based on built-in redundancies in key subsystem components. With redundant thyristors in the valves, spare converter transformers at each station, a completely redundant control and protection system, available spare parts for other important subsystems, maintenance equipment, and trained maintenance personnel at hand, an overall availability level as high as 99% can be attained, and the average number of annual forced outages can be kept below five.

The outage time for preventive maintenance of the substation depends mainly on a utility's practices and philosophy. Most of the substation equipment, including control and protection, can be overhauled in coordination with the valve maintenance, so that no additional interruption of service is necessary. Merely a week annually is needed per converter station of an HVDC link.

Because of their enormous significance in the high-voltage power transmission field, HVDC converters enjoy the highest level of scrutiny, systematic monitoring, and standardized international reporting of

© 2003 by CRC Press LLC

reliability design and performance. CIGRE has developed a reporting system [32] and publishes biannual HVDC station reliability reports [33]. At least one publication discusses the importance of substation operation and maintenance practices on actual reliability [34]. The IEEE has issued a guide for HVDC converter reliability [35]. Other high-voltage power electronic technologies have benefited from these efforts as well. Reliability, availability, and maintainability (RAM) have become frequent terms used in major high-voltage power electronic substation specifications [36] and contracts.

High-voltage power electronic systems warrant detailed specifications to assure successful implementation. In addition to applicable industry and owner standards for conventional substations and equipment, many specific conditions and requirements need to be defined for high-voltage power electronic substations. To facilitate the introduction of advanced power electronic technologies in substations, the IEEE and IEC have developed and continue to develop applicable standard specifications [37, 38].

Operation and maintenance training are important for the success of high-voltage power electronic substation projects. A substantial part of this training is best performed on site during commissioning. The IEEE and other organizations have, to a large degree, standardized high-voltage power electronic component and substation testing and commissioning procedures [39–41]. Real-time digital system simulators have become a major tool for the off-site function tests of all controls, thus reducing the amount of actual on-site testing. Nonetheless, staged fault tests are still performed with power electronic substations including, for example, with the Kayenta TCSC [42].

5.7 Future Trends

For interconnecting asynchronous ac networks and for transmission of bulk energy over long distances, HVDC systems remain economically, technically, and environmentally the preferred solution at least in the near future. One can expect continued growth of power electronics applications in transmission systems. Innovations such as the voltage-sourced converter [43] or the capacitor-commutated converter [44], active filters, outdoor valves [45], or the transformerless converter [46] may reduce the complexity and size of HVDC converter stations [47]. Voltage-sourced converter technology combined with innovative dc cables may make converter stations economically viable also at lower power levels (up to 300 MW).

New and more economical FACTS technologies may be introduced. Self-commutated converters and active filters will change the footprint of high-voltage power electronic substations. STATCOMs may eventually replace rotating synchronous condensers. TCSCs or UPFCs may replace phase-shifting transformers to some degree. New developments such as electronic transformer tap changers, semiconductor breakers, electronic fault-current limiters and arresters may even affect the "conventional" parts of the substation. As a result, the high-voltage power electronic substations of the future will be more common, more effective, more compact, easier to relocate, and found in a wider variety of settings.

References

1. Pereira, M. and Sadek, K., Application of Power Active Filters for Damping Harmonics, paper presented at CIGRE Study Committee 14 International Colloquium on HVDC and FACTS, Montreal, 1995.
2. Andersen, N., Gunnarsson, S., Pereira, M., Fritz, P., Damstra, G.C., Enslin, J.H.R., and O'Lunelli, D., Active Filters in HVDC Applications, paper presented at CIGRE International Colloquium on HVDC and FACTS, Johannesburg, South Africa, 1997.
3. CIGRE Working Group 14.28, Active dc filters in HVDC applications, *Electra*, 187, 1999.
4. Westerweller, T., Pereira, M., Huang, H., and Wild, G., Performance Calculations and Operating Results of Active Harmonic Filters for HVDC Transmission Systems, paper presented at IEEE-PES Summer Meeting, Vancouver, 2001.
5. Sørensen, P.L., Pereira, M., Sadek, K., and Wild, G., Active AC Filters for HVDC Applications, paper presented at CIGRE International Conference on Power Systems (ICPS), Wuhan, China, 2001.

© 2003 by CRC Press LLC

6. Torgerson, D.R., Rietman, T.R., Edris, A., Tang, L., Wong, W., Mathews, H., and Imece, A.F., A Transmission Application of Back-to-Back Connected Voltage Source Converters, paper presented at EPRI Conference on the Future of Power Delivery in the 21st Century, La Jolla, CA, 1997.
7. Asplund, G., Eriksson, K., Svensson, K., Jiang, H., Lindberg, J., and Palsson, R., DC Transmission Based on Voltage Source Converters, Paper 14-302, CIGRE, Paris, 1998.
8. Electric Power Research Institute and Western Area Power Administration, Modeling Development of Converter Topologies and Control for BTB Voltage Source Converters, TR-111182, EPRI, Palo Alto, CA, and Western Area Power Administration, Golden, CO, 1998.
9. Institute of Electrical and Electronics Engineers, Guide for Planning DC Links Terminating at AC System Locations Having Low Short-Circuit Capacities, Parts I and II, IEEE Std. 1204-1997, IEEE, Piscataway, NJ, 1997.
10. deLaneuville, H., Haidle, L., McKenna, S., Sanders, S., Torgerson, D., Klenk, E., Povh, D., Flairty, C.W., and Piwko, R., Miles City Converter Station and Virginia Smith Converter Station Operating Experiences, paper presented at IEEE Summer Power Meeting, San Diego, CA, 1991.
11. CIGRE Working Group 33-05, Application guide for insulation coordination and arrester protection of HVDC converter stations, *Electra*, 96, 101–156, 1984.
12. Schneider, H.M. and Lux, A.E., Mechanism of HVDC Wall Bushing Flashover in Nonuniform Rain, *IEEE Trans. Power Delivery*, 6, 448–455, 1991.
13. Porrino, A. et al., Flashover in HVDC Bushings under Nonuniform Rain, paper presented at 9th International Symposium on High Voltage Engineering, Graz, Austria, 1995, Vol. 3, p. 3204.
14. Tykeson, K., Nyman, A., and Carlsson, H., Environmental and geographical aspects in HVDC electrode design, *IEEE Trans. Power Delivery*, 11, 1948–1954, 1996.
15. Holt, R.J., Dabkowski, J., and Hauth, R.L., HVDC Power Transmission Electrode Siting and Design, ORNL/Sub/95-SR893/3, Oak Ridge National Laboratory, TN, 1997.
16. Vithayathil, J.J., Courts, A.L., Peterson, W.G., Hingorani, N.G., Nilson, S., and Porter, J.W., HVDC circuit breaker development and field tests, *IEEE Trans. Power Appar. Syst.*, 104, 2693–2705, 1985.
17. Schauder, C.D. et al., TVA STATCON Installation, paper presented at CIGRE Study Committee 14 International Colloquium on HVDC and FACTS, Montreal, 1995.
18. Schauder, C.D. et al., Operation of ±100MVAr TVA STATCON, *IEEE Trans. Power Delivery*, 12, 1805–1811, 1997.
19. Piwko, R.J. et al., The Slatt Thyristor-Controlled Series Capacitor, Paper 14-104 presented at CIGRE 35th International Conference on Large High Voltage Electric Systems, Paris, 1994.
20. Montoya, A.H., Torgerson, D.A., Vossler, B.A., Feldmann, W., Juette, G., Sadek, K., and Schultz, A., 230kV Advanced Series Compensation Kayenta Substation (Arizona), Project Overview; paper presented at EPRI FACTS Workshop, Cincinnati, OH, 1990.
21. Mehraban, A.S. et al., Application of the World's First UPFC on the AEP System, paper presented at EPRI Conference on the Future of Power Delivery, Washington, DC, 1996.
22. Fardanesh, B., Henderson, M., Shperling, B., Zelingher, S., Gyugi, L., Schauder, C., Lam, B., Mountford, J., Adapa, R., and Edris, A., Feasibility Studies for Application of a FACTS Device on the New York State Transmission System, CIGRE, Paris, 1998.
23. Edris, A., Zelingher, S., Gyugyi, L., and Kovalsky, L., Squeezing more power from the grid, *IEEE Power Eng. Rev.*, 22, June 2002.
24. Arabi, S., Hamadanizadeh, H., and Fardanesh, B., Convertible static compensator performance studies on the NY state transmission system, *IEEE Trans. Power Systems*, 17, July 2002.
25. Renz, K.W. and Tyll, H.K., Design Aspects of Relocatable SVCs, paper presented at VIII National Power Systems Conference, New Delhi, 1994.
26. Knight, R.C., Young, D.J., and Trainer, D.R., Relocatable GTO-based Static VAr Compensator for NGC Substations, Paper 14-106 presented at CIGRE Session, 1998.
27. International Electrotechnical Commission, Determination of Power Losses in HVDC Converter Stations, IEC Std. 61803.

© 2003 by CRC Press LLC

28. Beranek, L.L., *Noise and Vibration Control*, McGraw Hill, New York, 1971, rev. ed., Institute of Noise Control Engineering, 1988.
29. Smede, J., Johansson, C.G., Winroth, O., and Schutt, H.P., Design of HVDC Converter Stations with Respect to Audible Noise Requirements, *IEEE Trans. Power Delivery*, 10, 747–758, 1995.
30. Krishnayya, P.C.S. et al., Fire Aspects of HVDC Thyristor Valves and Valve Halls, paper presented at CIGRE 35th International Conference on Large High Voltage Electric Systems, Paris, 1994.
31. Holweg, J., Lips, H.P., and Sachs, G., Flame Resistance of HVDC Thyristor Valves: Design Aspects and Flammability Tests, Paper 410-04 presented at CIGRE Symposium, Tokyo, 1995.
32. CIGRE Working Group 04, Protocol for Reporting the Operational Performance of HVDC Transmission Systems, CIGRE report 14-97, WG 04, CIGRE, Paris, 1989, rev. 1997.
33. Christofersen, D.J., Vancers, I., Elahi, H., and Bennett, M.G., A Survey of the Reliability of HVDC Systems throughout the World during 1997–1998, Paper 14-102 presented at CIGRE Session, Paris, 2000.
34. Cochrane, J.J., Emerson, M.P., Donahue, J.A., and Wolf, G., A Survey of HVDC Operating and Maintenance Practices and Their Impact on Reliability and Performance, *IEEE Trans. Power Delivery*, 11(1), 1995.
35. Institute of Electrical and Electronics Engineers, Guide for the Evaluation of the Reliability of HVDC Converter Stations, IEEE Std. 1240-2000, IEEE, Piscataway, NJ, 2000.
36. Vancers, I. et al., A Summary of North American HVDC Converter Station Reliability Specifications, *IEEE Trans. Power Delivery*, 8, 1114–1122, 1993.
37. Canelhas, A., Peixoto, C.A.O., and Porangaba, H.D., Converter Station Specification Considering State of the Art Technology, paper presented at IEEE/Royal Institute of Technology Stockholm Power Tech: Power Electronics Conference, Stockholm, 1995.
38. Institute of Electrical and Electronics Engineers, Guide for a Detailed Functional Specification and Application of Static VAr Compensators, IEEE Std. 1031-2000, IEEE, Piscataway, NJ, 2000.
39. Institute of Electrical and Electronics Engineers, Recommended Practice for Test Procedures for High-Voltage Direct Current Thyristor Valves, IEEE Std. 857-1996, IEEE, Piscataway, NJ, 2000.
40. Institute of Electrical and Electronics Engineers, Guide for Commissioning High-Voltage Direct Current Converter Stations and Associated Transmission Systems, IEEE Std. 1378-1997, IEEE, Piscataway, NJ, 1997.
41. Institute of Electrical and Electronics Engineers, Guide for Static VAr Compensator Field Tests, IEEE Std. 1303-2000, IEEE, Piscataway, NJ, 2000.
42. Weiss, S. et al., Kayenta Staged Fault Tests, paper presented at EPRI Conference on the Future of Power Delivery, Washington, DC, 1996.
43. Zhao, Z. and Iravani, M.R., Application of GTO Voltage Source Inverter in a Hybrid HVDC Link, *IEEE Trans. Power Delivery*, 9, 369–377, 1994.
44. Bjorklund, P.E. and Jonsson, T., Capacitor Commutated Converters for HVDC, paper presented at IEEE/Royal Institute of Technology Stockholm Power Tech: Power Electronics Conference, Stockholm, 1995.
45. Asplund, G. et al., Outdoor Thyristor Valve for HVDC, Proceedings, IEEE/Royal Institute of Technology Stockholm Power Tech; Power Electronics, June 18–22, 1995.
46. Vithayathil, J.J. et al., DC Systems with Transformerless Converters, *IEEE Trans. Power Delivery*, 10, 1497–1504, 1995.
47. Carlsson, L. et al., Present Trends in HVDC Converter Station Design, paper presented at Fourth Symposium of Specialists in Electrical Operation and Expansion Planning (IV SEPOPE), Brazil, 1994.

© 2003 by CRC Press LLC

6

The Interface between Automation and the Substation[1]

6.1 Introduction 6-1
6.2 Physical Considerations 6-2
Components of a Substation Automation System • Locating the Interface Equipment • Environment • Electrical Environment
6.3 Analog Data Acquisition 6-4
Measurements • Performance Requirements • Instrument Transformers • Transducers • Scaling of Analog Values • Intelligent Electronic Devices (IED) as Analog Data Sources • Integrated Analog Quantities — Pulse Accumulators (PA)
6.4 Status Monitoring 6-10
Contact Performance • Wetting Sources • Wiring Practices
6.5 Control Functions 6-11
Interposing Relays • Control Circuit Designs • Latching Devices • Intelligent Electronic Devices (IED) for Control
6.6 Communications Networks inside the Substation 6-14
Wire Line Networks • Optical Fiber Systems • Communications between Facilities
6.7 Testing Automation Systems 6-17
Test Facilities • Commissioning Test Plan • In-Service Testing
6.8 Summary 6-20

James W. Evans
The St. Claire Group

6.1 Introduction

An electric utility substation automation (SA) system depends on the interface between the substation and its associated equipment to provide and maintain the high level of confidence demanded for power system operation. It must also serve the needs of other corporate users to a level that justifies its existence. This chapter describes typical functions provided in utility SA systems and some important considerations in the interface between substation equipment and the automation system components.

[1]Material in this chapter was published previously in Evans, J.W., Considerations in applying automation systems to electric utility substations, in *The Electric Power Engineering Handbook,* Grigsby, L.L., Ed., CRC Press, Boca Raton, FL, 2001, chap. 5.5.

0-8493-1703-7/03/$0.00+$1.50

© 2003 by CRC Press LLC

© 2003 by CRC Press LLC

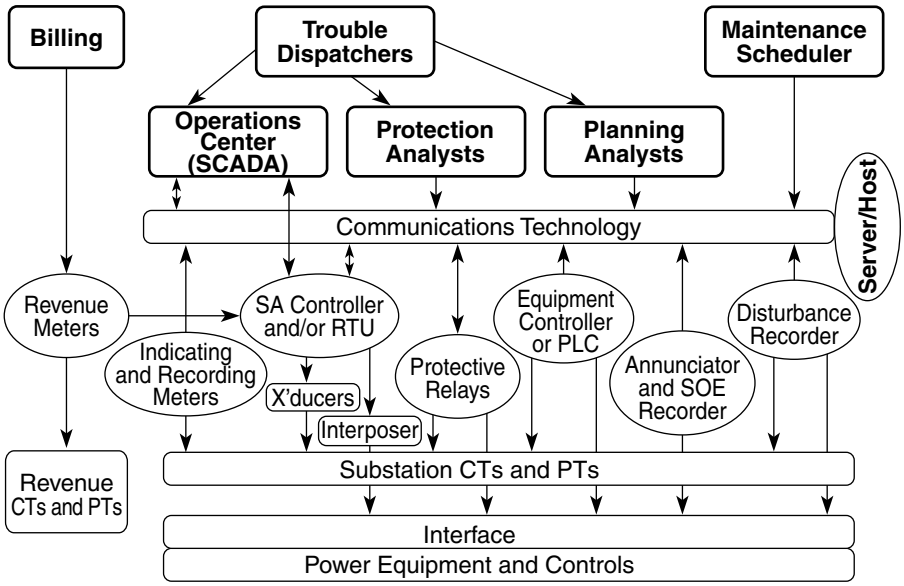

FIGURE 6.1 Power-station SA system functional diagram.

6.2 Physical Considerations

6.2.1 Components of a Substation Automation System

The electric utility SA system uses a variety of devices integrated into a functional package by a communications technology for the purpose of monitoring and controlling the substation. SA systems incorporate microprocessor-based intelligent electronic devices (IEDs), which provide inputs and outputs to the system. Common IEDs are protective relays, load survey and operator indicating meters, revenue meters, programmable logic controllers (PLC), and power equipment controllers of various descriptions. Other devices may also be present, dedicated to specific functions within the SA system. These may include transducers, position monitors, and clusters of interposing relays. Dedicated devices may use a controller (SA controller) or interface equipment such as a conventional remote terminal unit as a means of integration into the SA system. The SA system typically has one or more communications connections to the outside world. Common communications connections include utility operations centers, maintenance offices, and engineering centers. Most SA systems connect to a traditional SCADA (supervisory control and data acquisition) system master station serving the real-time needs for operating the utility network from an operations center. SA systems may also incorporate a variation of the SCADA remote terminal unit (RTU) for this purpose, or the RTU function may appear in an SA controller or host computer. Communications for other utility users is usually through a bridge, gateway, or network processor. The components described here are illustrated in Figure 6.1.

6.2.2 Locating the Interface Equipment

The SA system interfaces to control station equipment through interposing relays and to measuring circuits through meters, protective relays, transducers, and other measuring devices as indicated in Figure 6.1. These interfaces may be associated with, and integral to, an IED, or they may be dedicated interface devices for a specific automation purpose. The interfaces may be distributed throughout the station or centralized within one or two cabinets. Available panel space, layout of station control centers, as well as engineering and economic judgment are major factors in selecting a design.

© 2003 by CRC Press LLC

The centralized interface simplifies installing an SA system in an existing substation, since the placement of the interface equipment affects only one or two panels (the new SA controller and interface equipment panels). However, the cabling from each controlled and monitored equipment panel must meet station panel wiring standards for insulation, separations, conductor sizing, and interconnection termination. Centralizing the SA system/station equipment interface has the potential to adversely affect the security of the station, as many control and instrument transformer circuits become concentrated in a single panel or cabinet and can be seriously compromised by fire and invite human error. This practice has been widely used for installing earlier SCADA systems, where all the interfaces centered around the SCADA remote terminal unit.

Placing the interface equipment on each monitored or controlled panel is much less compromising, but may be more costly and difficult to design. Each interface placement must be individually located, and more panels are affected. If a low-energy interface (less than 50 V) is used, a substantial savings in cable cost may be realized, since interconnections between the SA controller and the interface devices can be made with less expensive cable and hardware. Low-energy interconnections also lessen the impact on the cabling system of the substation, reducing the need for additional cable trays, wireways, and ducts.

The distributed approach is more logical when the SA system incorporates protective-relay IEDs, panel-mounted indicating meters, or control-function PLCs. Protection engineers usually insist on separating protection devices into logical groups based on substation configuration for security. Similar concerns often dictate the placement of indicating meters and PLCs. Many utilities have abandoned the operator "bench board" in substations, thereby distributing the operator control and indication hardware throughout the substation. The interface to the SA system becomes that of the IED on the substation side and a communications channel on the SA side. Depending on the communications capability of the IEDs, the SA interface can be as simple as a shielded, twisted-pair cable routed between IEDs and the SA controllers. The communications interface can also be complex where short-haul RS-232 connections to a communications controller are required. These pathways can also utilize optical-fiber systems and unshielded twisted-pair (UTP) ethernet cabling or even coaxial cable or some combination thereof.

As the cabling distances within the substation increase, system installation costs increase, particularly if additional cable trays, conduit, or ducts are required. Using SA communication technology and IEDs can reduce interconnection costs. Distributing multiple small SA hubs throughout the substation can reduce cabling to that needed for a communications link to the SA controller. Likewise, these hubs can be isolated using fiber-optic technology for improved security and reliability.

6.2.3 Environment

The environment of a substation is challenging for SA equipment. Substation control buildings are seldom heated or air-conditioned. Ambient temperatures can range from well below freezing to above 100°F (40°C). Metal-clad switchgear substations can reach ambient temperatures in excess of 140°F (50°C). Temperature changes stress the stability of measuring components in IEDs, RTUs, and transducers. Good temperature stability is important in SA system equipment and must be defined in the equipment purchase specifications. Designers of SA systems for substations need to pay careful attention to the temperature specifications of the equipment selected for SA. In many environments, self-contained heating or air conditioning may be advisable.

When equipment is installed in outdoor enclosures, the temperature cycling problem is aggravated, and moisture from precipitation leakage and from condensation becomes troublesome. Outdoor enclosures usually need heaters to control the temperature and prevent condensation. The placement of heaters should be reviewed carefully when designing an enclosure, as they can aggravate temperature stability and even create hot spots within the cabinet that can damage components and shorten life span. Heaters near the power batteries help improve low-temperature performance but adversely effects life span at high ambient temperatures. Obviously, keeping incident precipitation out of the enclosure is very important. Drip shields and gutters around the door seals will reduce moisture penetration. Venting the cabinet helps limit the possible

© 2003 by CRC Press LLC

buildup of explosive gases from battery charging but may pose a problem with the admittance of moisture. Solar-radiation shields may also be required to keep enclosure temperature manageable. Specifications that identify the need for wide temperature-range components, coated circuit boards, and corrosion-resistant hardware are part of specifying and selecting SA equipment for outdoor installation.

Environmental factors also include airborne contamination from dust, dirt, and corrosive atmospheres found at some sites. Special noncorrosive cabinets and air filters may be required for protection against the elements. It is also necessary to keep insects and wildlife out of equipment cabinets. In some regions seismic requirements are important enough to receive special consideration.

6.2.4 Electrical Environment

The electrical environment of a substation is severe. High levels of electrical noise and transients are generated by the operation of power equipment and their controls. Operation of high-voltage disconnect switches can generate transients that appear throughout the station on current, potential, and control wiring entering or leaving the switchyard. Station controls for circuit breakers, capacitors, and tap changers can also generate transients found throughout the station on battery-power and station-service wiring. EHV stations also have high electrostatic field intensities that couple to station wiring. Finally, ground rise during faults or switching can damage electronic equipment in stations.

Effective grounding is critical to controlling the effects of substation electrical noise on electronic devices. IEDs need a solid ground system to make their internal suppression effective. Ground systems should be radial, with signal and protective grounds separated. They require large conductors for "surge" grounds, making ground leads as short as possible, and establishing a single ground point for logical groupings of equipment. These measures help to suppress the introduction of noise and transients into measuring circuits. A discussion of this topic is usually found in the IED manufacturer's instruction book, and their advice should be heeded.

The effects of electrical noise can be controlled with surge suppression, shielded and twisted-pair cabling, as well as careful cable separation practices. However, suppressing surges with capacitors, metal oxide varistors (MOV), and semiconducting overvoltage "transorbs" on substation instrument transformer and control wiring can protect IEDs. They can create reliability problems as well. Surge suppressors must have sufficient energy-absorbing capacity and be coordinated so that all suppressors clamp around the same voltage. Otherwise, the lowest-dissipation, lowest-voltage suppressor will become sacrificial. Multiple failures of transient suppressors can short-circuit important station signals to ground, leading to blown potential fuses, shorted current transformers (CT), shorted control wiring, and even false tripping.

While every installation has a unique noise environment, some testing can help prevent noise problems from becoming unmanageable. IEEE Surge Withstand Capability Test C37.90-1992 addresses the transients generated by the operation of high-voltage disconnect switches and electromechanical control devices. This test can be applied to devices in a laboratory or on the factory floor, and it should be included when specifying station interface equipment. Insulation resistance and high-potential tests are also sometimes useful and are standard requirements for substation devices for many utilities.

6.3 Analog Data Acquisition

6.3.1 Measurements

Electric utility SA systems gather power system performance parameters (i.e., volts, amperes, watts, and VArs) for system generators, transmission lines, transformer banks, station buses, and distribution feeders. Energy output and usage quantities (i.e., kilowatt-hours and kiloVAr-hours) are also important for the exchange of financial transactions. Other quantities such as transformer temperatures, insulating gas pressures, fuel tank levels for on-site generation, or head level for hydro generation might also be measured and transmitted as analog values. Often, transformer tap positions, regulator positions, or

© 2003 by CRC Press LLC

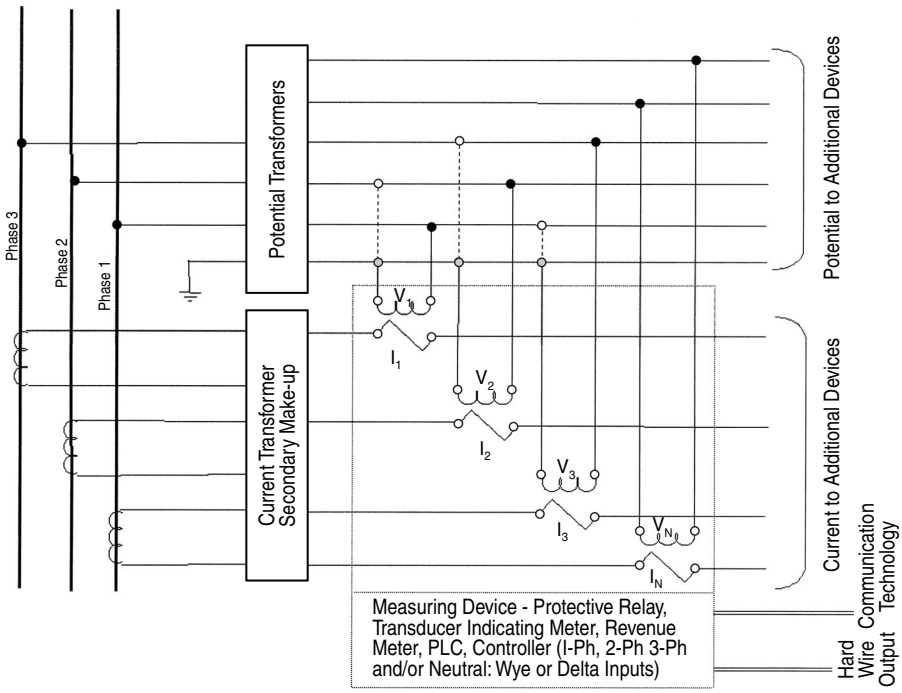

FIGURE 6.2 SA system measuring interface.

other multiple position quantities are also transmitted as if they were analog values. These values enter the SA system through IEDs, transducers, and sensors.

Transducers and IEDs measure electrical quantities (watts, VArs, volts, amps) with instrument transformers provided in power equipment, as shown in Figure 6.2. They convert instrument transformer outputs to digital values or dc voltages or currents that can be readily accepted by a traditional SCADA RTU or SA controller.

Analog values can also be collected by the SA system from substation meters, protective relays, revenue meters, and recloser controls as IEDs. Functionally the process is equivalent, but the IEDs perform signal processing and digital conversion directly as part of their primary function. IEDs use a communications channel for passing data to the SA controller instead of conventional analog signals.

6.3.2 Performance Requirements

In the initial planning stages of an SA system, the economic value of the data to be acquired needs to be weighed against the cost to measure it. A balance must be struck to achieve the data quality required to suit the users and functions of the system. This affects the conceptual design of the measuring interface and provides input to the performance specifications for IEDs and transducers as well as the measuring practices applied. This step is important. Specifying a higher performance measuring system than required raises the overall system cost. Conversely, constructing a low-performance system adds costs when the measuring system must be upgraded. The tendency to select specific IEDs for the measuring system without assessing the actual measuring technology can lead to disappointing performance.

The electrical relationship between measurements and the placement of available instrument transformer sources deserves careful attention to insure satisfactory performance. Many design compromises must be made when installing SA monitoring in an existing power station because of the limited availability of measuring sources. This is especially true when using protective relays as load-monitoring data sources (IEDs). Protection engineers often ignore current omissions or contributions at a measuring

© 2003 by CRC Press LLC

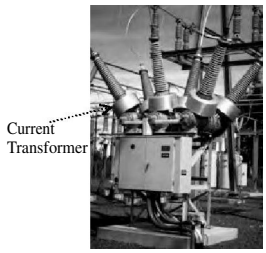

FIGURE 6.3 Bushing current transformer installation.

point, as they may not affect the performance of protection during faults. These variances are often intolerable for power flow measurements. The placement of a measuring source can also result in measurements that include or exclude reactive contributions of a series or shunt reactor or capacitor; measurements that include reactive component contributions of a transformer bank; or measurements that are affected when a section breaker is open because the potential source is on an adjacent bus. Power system charging current and unbalances also influence measurement accuracy, especially at low load levels. The compromises are endless, and each produces an unusual operating condition in some state. When deficiencies are recognized, the changes to correct them can be very costly, especially if instrument transformers must be installed, moved, or replaced to correct the problem.

The overall accuracy of measured quantities is affected by a number of factors. These include instrument transformer errors, IED or transducer performance, and analog to digital (A/D) conversion. Accuracy is not predictable based solely on the IED, transducer, or A/D converter specifications. Significant measuring errors often result from instrument transformer performance and errors induced in scaling.

Revenue metering accuracy is usually required for monitoring power system interconnections and feeding economic-area-interchange dispatch systems. High accuracy, revenue-metering-grade instrument transformers and 0.25%-accuracy-class IEDs or transducers can produce consistent real power measurements with accuracy of 1% or better at 0.5 to 1.0 power factor, and reactive power measurements with accuracy of 1% or better at 0 to 0.5 power factors.

When an SA system provides information for internal telemetering of power flow, revenue-grade instrument transformers are not usually available. SA IEDs and transducers must often share less accurate instrument transformers provided for protective relaying or load monitoring. Overall accuracy under these conditions can easily decrease to 2 to 3% for real power, voltage, and current measurements and 5% or greater for reactive power.

6.3.3 Instrument Transformers

6.3.3.1 Current Transformers

Current transformers (CTs) of all sizes and types find their way into substations to provide the current replicas for metering, controls, and protective relaying. Some will perform well for SA applications, and some may be marginal. CT performance is characterized by ratio correction factor (turns ratio error), saturation voltage, phase-angle error, and rated burden. Bushing CTs installed in power equipment, as shown in Figure 6.3, are the most common type found in medium- and high-voltage power equipment. They are toroidal, having a single primary turn (the power conductor) that passes through their center. The current transformation ratio results from the number of turns wound on the core to make up the secondary. More than one ratio is often provided by tapping the secondary winding at multiple turn ratios. The core cross-sectional area, diameter, and magnetic properties determine the CT's performance. As the CT is operated over its current ranges, its deviations from specified turns ratio is characterized by its ratio-correction curve, sometimes provided by the manufacturer. At low currents, the exciting current causes ratio errors that are predominant until sufficient primary flux overcomes the effects of core magnetizing. Thus, watt or VAr measurements made at very low load may be substantially in error

© 2003 by CRC Press LLC

both from ratio error and phase shift. Exciting-current errors are a function of individual CT construction. They are generally higher for protection CTs than metering CTs by design.

Metering CTs are designed with core cross sections chosen to minimize exciting-current effects and are allowed to saturate at fault currents. Larger cores are provided for protection CTs where high-current saturation must be avoided for the CT to faithfully reproduce high currents for fault sensing. The exciting current of the larger core at low load is not considered important for protection. Core size and magnetic properties limit the ability of CTs to develop voltage to drive secondary current through the circuit load impedance (burden). This is an important consideration when adding SA IEDs or transducers to existing metering CT circuits, as added burden can affect accuracy. The added burden of SA devices is less likely to create metering problems with protection CTs at load levels, but it could have undesirable effects on protective relaying at fault levels. In either case, CT burdens are an important consideration in the design. Experience with both protection and metering CTs wound on modern high-silicon steel cores has shown, however, that both perform comparably once the operating current sufficiently exceeds the exciting current if secondary burden is kept low.

Occasions arise where it is necessary to obtain current from more than one source by summing currents with auxiliary CTs. This will perform satisfactorily only if the auxiliaries used are adequate. If the core size is too small to drive the added circuit burden, the auxiliaries will introduce excessive ratio and phase-angle errors that will degrade measurement accuracy. The use of auxiliary transformers must be approached with caution.

6.3.3.2 Potential Sources

The most common potential sources for power system measurements are either wound transformers (potential transformers) or capacitive divider devices (capacitor voltage transformers or bushing potential devices). Some new applications of resistor dividers and magneto-optic technologies are also becoming available. All provide scaled replicas of their high-voltage potential. They are characterized by their ratio, load capability, and phase-angle response. Wound potential transformers (PTs) provide the best performance with ratio and phase-angle errors suitable for revenue measurements. Even protection-type potential transformers can provide revenue-metering performance if the burden is carefully controlled. PTs are usually capable of supplying large potential circuit loads without degradation, provided their secondary wiring is of adequate size. For substation automation purposes, PTs are unaffected by changes in load or temperature. They are the preferred source for measuring potential.

Capacitor voltage transformers (CVTs) use a series stack of capacitors, connected as a divider to ground, along with a low-voltage transformer to obtain a secondary voltage replica. They are less expensive than wound transformers and can approximate wound transformer performance under controlled conditions. While revenue-grade CVTs are available, CVTs are less stable and less accurate than wound PTs. Older CVTs may be totally unsatisfactory. Secondary load and ambient temperature can affect CVTs. CVTs must be individually calibrated in the field to bring their ratio errors within 1%, and must be recalibrated whenever the load is changed. Older CVTs can change ratio up to ±5% with ambient temperature variation. In all, CVTs are a reluctant choice for measuring SA systems. When CVTs are the only choice, consideration should be given to using the more modern devices for better performance along with a periodic calibration program to maintain their performance at satisfactory levels.

Bushing capacitor potential devices (BCPD) use a tap made in the capacitive grading of a high-voltage bushing to provide the potential replica. They can supply only very limited secondary load and are very load sensitive. They can also be very temperature sensitive. As with CVTs, if BCPDs are the only choice, they should be individually calibrated and periodically checked.

6.3.4 Transducers

Transducers measure power system parameters by sampling instrument transformer secondaries. They provide a scaled, low-energy signal that represents a power system quantity that the SA interface controller can easily accept. Transducers also isolate and buffer the SA interface controller from the power system

© 2003 by CRC Press LLC

and substation environments. Transducer outputs are dc voltages or currents in the range of a few tens of volts or milliamperes.

Transducers measuring power system electrical quantities are designed to be compatible with instrument transformer outputs. Potential inputs are based around 120 or 115 Vac, and current inputs accept 0 to 5 A. Many transducers can operate at levels above their normal ranges with little degradation in accuracy provided their output limits are not exceeded. Transducer input circuits share the same instrument transformers as the station metering and protection systems; thus, they must conform to the same wiring standards as any switchboard component. Wiring standards for current and potential circuits vary between utilities, but generally 600-V-class wiring is required, and no. 12 AWG or larger wire is used. Special termination standards also apply in many utilities. Test switches for "in-service" testing of transducers are often provided to make it possible to test transducers without shutting down the monitored equipment. Transducers may also require an external power source to operate. When this is the case, the reliability of this source is crucial in maintaining data flow.

Transducer outputs are voltage or current sources specified to supply a rated voltage or current into a specific load. For example, full output may correspond to 10 V at up to 1.0 mA or 1.0 mA into 10 kΩ, up to 10 V maximum. Some over-range capability is provided in transducers so long as the maximum current or voltage capability is not exceeded. The over-range can vary from 20 to 100%, depending on the transducer. However, accuracy is usually not specified for the over-range area.

Transducer outputs are usually wired with shielded, twisted-pair cable to minimize stray signal pickup. In practice, no. 18 AWG conductors or smaller are satisfactory, but individual utility practices differ. It is common to allow transducer output circuits to remain isolated from ground to reduce the susceptibility to transient damage, although some SA controller suppliers provide a common ground for all analogs, often to accommodate electronic multiplexers. Some transducers may also have a ground reference associated with their outputs. Double grounds, where transducer and controller both have ground references, can cause major reliability problems. Practices also differ somewhat on shield grounding, with some shields grounded at both ends, but it is also common practice to ground shields at the SA controller end only. When these signals must cross a switchyard, however, it is a good practice to not only provide the shielded twisted pairs, but it also to provide a heavy-gauge overall cable shield. This shield should be grounded where it leaves a station control house to enter a switchyard and where it reenters another control house. These grounds are terminated to the station ground mass, and not to the SA analog grounds bus.

6.3.5 Scaling of Analog Values

In an SA system, the transition of power system measurements to database values or displays is a process that entails several steps of scaling, each with its own dynamic range. Power system parameters are first scaled by current and potential transformers, then by IEDs or transducers. In the process, an analog-to-digital conversion occurs as well. Each of these steps has its own proportionality constant that, when combined, relates the digital coding of the data value to the primary quantities. At the data receiver or master station, these are operated on by one or more constants to convert the data to user-acceptable values for databases and displays.

SA system measuring performance can be severely affected by data value scaling. Optimally, under normal power system conditions, each IED or transducer should be operating in its most linear range and utilize as much A/D conversion range as possible. Scaling should take into account the minimum, normal, and maximum values for the quantity, even under abnormal or emergency loading conditions. Optimum scaling balances the expected value at maximum, the current and potential transformer ratios, the IED or transducer range, and the A/D range to utilize as much of the IED or transducer output and A/D range as possible under normal power system conditions without driving the conversion over its full scale at maximum value. This practice minimizes the quantizing error of the A/D conversion process and provides the best quantity resolution.

© 2003 by CRC Press LLC

Conversely, scaling some IEDs locally makes their data difficult to use in an SA system. A solution to this problem is to set the IED scaling to unity and apply all the scale factors at the data receivers. Under the practical restraints imposed when applying SA to an existing substation, scaling can be expected to be compromised by available instrument transformer ratios and A/D or IED scaling provisions. A reasonable selection of scale factor and range would provide half output or more under normal conditions but not exceed 90% of full range under maximum load.

6.3.6 Intelligent Electronic Devices (IED) as Analog Data Sources

Technological advancements have made it practical to use electronic substation meters, protective relays, and even reclosers and regulators as sources of analog data. IED measurements are converted directly to digital form and passed to the SA system via a communications channel while the IED performs its primary function. In order to use IEDs effectively, it is necessary to assure that the performance characteristics of the IED fit the requirements of the system. Some IEDs designed for protection functions, where they must accurately measure fault currents, do not measure low load accurately. Others, where measuring is part of a control function, may lack overload capability or have insufficient resolution. Sampling rates and averaging techniques will affect the quality of data and should be evaluated as part of the system product selection process. With reclosers and regulators, the measuring CTs and PT are often contained within the equipment. They may not be accurate enough to meet the measuring standards set for the SA system. Regulators may only have a single-phase CT and PT. These issues challenge the SA system integrator to deliver a quality system.

The IED communications channel becomes an important data highway and needs attention to security, reliability, and most of all, throughput. A communications interface is needed in the SA system to retrieve and convert the data to meet the requirement of the master or data receiver.

6.3.7 Integrated Analog Quantities — Pulse Accumulators (PA)

Some power system quantities of interest are energy-transfer values derived from integrating instantaneous values over an arbitrary time period, usually 15-min values for one hour. The most common of these is watt-hours, although VAr-hours and amp-squared-hours are not uncommon. They are usually associated with energy interchange over interconnecting tie lines, generator output, at the boundary between a transmission provider and distribution utility, or the load of major customers. In most instances, they originate from a revenue-metering package that includes revenue-grade instrument transformers and one or more watt-hour and VAr-hour meters. Most utilities provide remote and/or automatic reading with a local recording device such as a magnetic tape recorder or remote meter-reading device. They also can be interfaced to an SA system.

Integrated energy-transfer values are traditionally recorded by counting the revolutions of the disc on an electromechanical watt-hour meter-type device. Newer technology makes this concept obsolete, but the integrated interchange value continues as a mainstay of energy interchange between utilities and customers. In the old technology, a set of contacts opens and closes in direct relation to the disc rotation, either mechanically from a cam driven by the meter disc shaft, or through the use of opto-electronics and a light beam interrupted by or reflected off the disc. These contacts can be standard form "A," form "B," form "C," or a form "K," which is peculiar to watt-hour meters. Modern revenue meters often mimic this feature, as do some analog transducers. Each contact transfer ("pulse") represents an increment of energy transfer as measured by a watt-hour meter. Pulses are accumulated over a period of time in a register, and then the total is recorded on command from a clock.

When applied to SA systems, energy-transfer quantities are processed by metering IEDs, PAs in an RTU, or an SA controller. The PA receives contact closures from the metering package and accumulates them in a register. On command from the master station, the pulse count is frozen, then transmitted. The register is sometimes reset to zero to begin the cycle for the next period. This command is synchronized to the master station clock, and all "frozen" accumulator quantities are polled some time later when

© 2003 by CRC Press LLC

time permits. Some RTUs can freeze and store their pulse accumulators from an internal or local external clock should the master "freeze-and-read" command be absent. These can be internally "time tagged" for transmission when commanded by the master station. High-end meter IEDs retain interval accumulator reads in memory that can be retrieved by the utility's automatic meter-reading system. They can share multiple ports and supply data to the SA system. Other options include the capability to arithmetically process several demand quantities to derive a resultant. Software to "de-bounce" the demand contacts is also sometimes available.

Integrated energy-transfer telemetering is almost always provided on tie lines between bordering utilities and at the transmission-distribution or generation-transmission boundaries. The location of the measuring point is usually specified in the interconnection agreement contract, along with a procedure to insure metering accuracy. Some utilities agree to share a common metering point at one end of a tie and electronically transfer the interchange reading to the bordering utility. Others insist on having their own duplicate metering, sometimes specified to be a backup service. When a tie is metered at both ends, it is important to verify that the metering installations are in agreement. Even with high-accuracy metering, however, some disagreement can be expected, and this is often a source of friction between utilities.

6.4 Status Monitoring

Status indications are an important function of SA systems for the electrical utility. Status monitoring is provided for power circuit breakers, circuit switchers, reclosers, motor-operated disconnect switches, and a variety of other on-off functions in a substation. Multiple on-off states are sometimes used to describe stepping or sequential devices. In some cases, status points might be used to convey a digital value such as a register, where each point is one bit of the register.

Status points can be provided with status-change memory so that changes occurring between data reports can be monitored. Status changes may also be "time tagged" to provide sequence of events. Status indications originate from auxiliary switch contacts that are mechanically actuated by the monitored device. Interposing relay contacts are also used for status points, where the interposer is driven from auxiliary switches. This practice is common, depending on the utility and the availability of spare contacts. The exposure of status-point wiring to the switchyard environment is often a consideration in installing interposing relays.

6.4.1 Contact Performance

The mechanical response of either relay or auxiliary switch contacts can complicate status monitoring. Contacts may electrically open and close several times (mechanically "bounce") before finally settling in the final position when they transfer from one position to another. The input point may interpret the bouncing of the status contact as multiple operations of the primary device. A "mercury wetted" contact is sometimes used to minimize contact bounce. Another technique used is to employ "C"-form contacts for status indications so that status changes are recognized only when one contact closes followed by the opening of its companion. Contact changes occurring on one contact only are ignored. C-contact arrangements are more immune to noise pulses. Another technique to deal with bouncing is to wait for a period of time before recognizing the change, giving the contact a chance to bounce into its final state before reporting the change.

Event recording with high-speed resolution is particularly sensitive to contact bounce, as each transition is recorded. When the primary device is subject to pumping or bouncing induced from mechanical characteristics, it may be difficult to prevent excessive status-change reporting. When interposing devices are used, event contacts can also contain unwanted delays that can confuse interpretation of event sequences. While this may not be avoidable, it is important to know the response time of all event devices so that event sequences can be correctly interpreted.

IEDs often have "de-bounce" algorithms in their programming to filter contact bouncing. These algorithms allow the user to tune the de-bouncing to be tolerant of bouncing contacts.

© 2003 by CRC Press LLC

6.4.2 Wetting Sources

Status points are usually isolated "dry" contacts, and the monitoring power (wetting) is supplied from the input point. Voltage signals from a station control circuit can also be monitored by SA controllers and interpreted as status signals. Equipment suppliers can provide a variety of status-point input options. When selecting between options, the choice balances circuit isolation against design convenience. The availability of spare isolated contacts often becomes an issue in choice. Voltage signals may eliminate the need for spare contacts, but these signals can require circuits from various parts of the station and from different control circuits to be brought to a common termination location. This compromises circuit isolation within the station and raises the possibility of test personnel causing circuit misoperation. Usually, switchboard wiring standards would be required for this type of installation, which could increase costs. Voltage inputs are often fused with small fuses at the source to minimize the risk that the exposed wiring will compromise the control circuits.

In installations using isolated "dry" contacts, the wetting voltage is sourced from the station battery, an SA controller, or IED supply. Each monitored control circuit must then provide an isolated contact for status monitoring. Circuit isolation occurs at each control panel, thus improving the overall security of the installation. It is common for many status points to share a common supply, either station battery or a low voltage supply provided for this purpose. When status points are powered from the station battery, the monitored contacts have full control potential appearing across their surfaces and thus can be expected to be more immune to open-circuit failures from contact-surface contamination. Switchboard wiring standards would be required for this type of installation. An alternative source for status points is a low-voltage wetting supply. Wiring for low-voltage-sourced status points may not need to be switchboard standard in this application, which could yield some economies. Usually, shielded, twisted pairs are used with low-voltage status points to minimize noise effects. Concern over contact reliability due to the lower "wetting" voltage can be partially overcome by using contacts that are closed when the device is in its normal position, thereby maintaining a loop current through the contact. For improved reliability, some SA systems provide a means to detect wetting-supply failure. Where multiple IEDs are status-point sources, it can be difficult to detect a lost wetting supply.

In either approach, the status-point loop current is determined by the monitoring-device design. Generally, the loop current is 1.0 to 20 mA. Filter networks and/or software filtering is usually provided to reduce noise effects and false changes resulting from bouncing contacts.

6.4.3 Wiring Practices

When wiring status points, it is important to make cable runs radially between the monitor and the monitored device. Circuits where status circuit loops are not parallel pairs are subject to induced currents that can cause false status changes. Circular loops most often occur when using spare existing conductors in multiple cables or when using a common return connection for several status points. Designers should be wary of this practice. The resistance of status loops can also be an important consideration. Shielded, twisted pairs make the best interconnection for status points, but this type of cable is not always readily available in switchboard standard sizes and insulation for use in control battery-powered status circuits.

Finally, it is important to provide for testing status circuits. Test switches or jumper locations for simulating open or closed status circuits are needed as well as a means for isolating the circuit for testing.

6.5 Control Functions

The supervisory control functions of electric utility SA systems provide routine and emergency switching and operating capability for station equipment. SA controls are most often provided for circuit breakers, reclosers, and switchers. It is not uncommon to also include control for voltage regulators, tap-changing transformers, motor-operated disconnects, valves, or even peaking units through an SA system.

A variety of different control outputs are available from IEDs and SA controllers, which can provide both momentary timed control outputs and latching-type interposing. Latching is commonly associated

© 2003 by CRC Press LLC

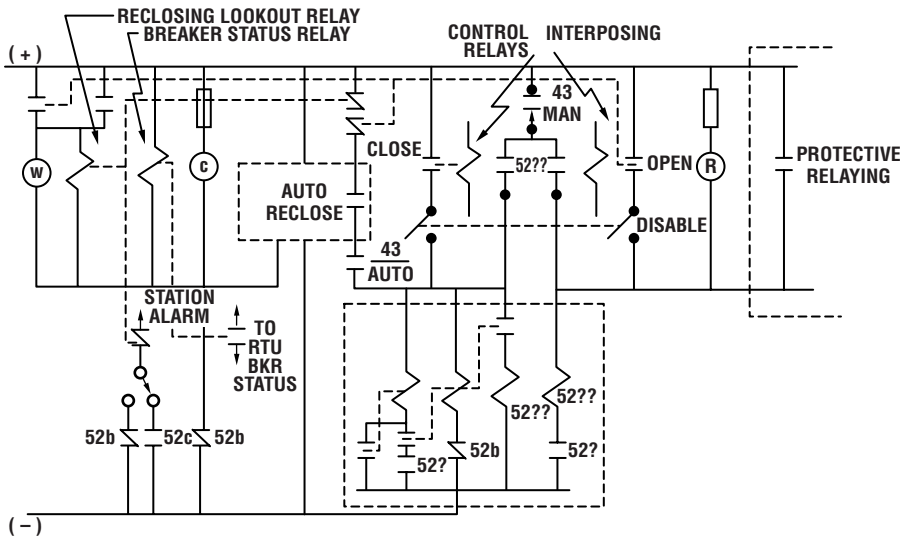

FIGURE 6.4 Schematic diagram of a breaker control interface.

with blocking of automatic breaker reclosing or voltage controllers for capacitor switching. A typical interface application for controlling a circuit breaker is shown in Figure 6.4.

6.5.1 Interposing Relays

Power station controls often require high power levels and operate in circuits powered from 48-, 125-, or 250-Vdc station batteries or from 120- or 240-Vac station service. Control circuits often must switch 10 or 20 A to effect their action, which imposes constraints on the interposing devices. The interposing between an SA controller or IED and station controls commonly requires the use of large electromechanical relays. Their coils are driven by the SA control system through static or pilot duty relay drivers, and their contacts switch the station control circuits. Interposing relays are often specified with 25-A, 240-Vac contact rating to insure adequate interrupting duty. However, where control circuits allow it, smaller interposing relays are also used, often with only 10- or 3-A contacts,. When controlling dc circuits, the large relays may be required, not because of the current requirements, but to provide the long contact travel needed to interrupt the arc associated with interrupting an inductive dc circuit. Note that most relays that would be considered for the interposing function do not carry dc interrupting ratings. "Magnetic blowout" contacts, contacts fitted with small permanent magnets that lengthen the interruption arc to aid in extinguishing it, may also be used to improve interrupting duty. They are polarity sensitive, however, and work only if correctly wired. Correct current flow direction must be observed.

Many SA controllers and IEDs require the use of surge suppression to protect their control output contacts. A fast-switching diode can be used across the driven coil to commute the coil-collapse transient when the coil is de-energized. As the magnetic field of the device coil collapses on de-energization, the coil voltage polarity reverses, and the collapsing field generates a back EMF in an attempt to sustain the coil current. The diode conducts the back EMF and prevents the buildup of high voltage across the coil. The technique is very effective. It requires the diode to handle the steady-state current of the coil and be able to withstand at least three times the steady-state voltage. Failure of the diode in the shorted mode will disable the device and cause a short circuit of the control driver, although some utilities use a series resistor with the diode to reduce this reliability problem.

Other transient suppressors include "transorbs" and metal oxide varistors (MOV). Transorbs behave like back-to-back zener diodes and clamp the voltage across their terminals to a specified voltage. They are reasonably fast. MOVs are very similar, but the suppression takes place as the voltages across them

© 2003 by CRC Press LLC

cause the metal oxide layers to break down, and they are not as fast. Both transorbs and MOVs have energy rating in joules. They must be selected to withstand the energy of the device coil. Many applications of transorbs and MOVs clamp the transients to ground rather than clamping them across the coil. In this configuration, the ground path must be low impedance in order for the suppression to be effective.

6.5.2 Control Circuit Designs

Many station control circuits can be designed so that the interrupting-duty problem for interposing relays is minimized, thereby allowing smaller interposing relays to be used. These circuits are designed so that once they are initiated, some other contact in the circuit interrupts control current in preference to the initiating device. These are easily driven from momentary outputs. The control logic is such that the initiating contact is bypassed once control action begins, and it remains bypassed until control action is completed. The initiating circuit current is then interrupted, or at least greatly reduced, by a device in another portion of the control circuit. This eliminates the need for the interposing relay to interrupt heavy control circuit current. This is typical of modern circuit breaker closing circuits, motor-operated disconnects, and many circuit switchers. Other controls that "self-complete" are breaker tripping circuits, where the tripping current is interrupted by the breaker auxiliary switch contacts long before the initiating contact opens.

Redesigning control circuits often simplifies the application of supervisory control. The need for large interposing relay contacts can be eliminated in many cases by simple modifications to the controlled circuit to make them "self completing." An example of this would be the addition of any auxiliary control relay to a breaker control circuit, which maintains the closing circuit until the breaker has fully closed and provides antipumping should it trip free. This type of revision is often desirable, anyway, if a partially completed control action could result in some equipment malfunction.

Control circuits can also be revised to limit control-circuit response to prevent more than one action from taking place while under supervisory control. This includes preventing a circuit breaker from "pumping" if it were closed into a fault or failed to latch. Another example is to limit tap-changer travel to one tap per initiation.

6.5.3 Latching Devices

It is often necessary to modify control-circuit behavior when supervisory control is used to operate station equipment. Control mode changes that would ordinarily accompany manual local operation must also occur when action occurs through supervisory control. Many of these require latched interposing relaying, which modifies control behavior when supervisory control is exercised, and can be restored through supervisory or local control. The disabling of automatic circuit-breaker reclosing when a breaker is opened through supervisory control action is an example. Automatic reclosing must also be restored or reset when a breaker is closed through supervisory control. This concept also applies to automatic capacitor switcher controls that must be disabled when supervisory control is used and can be restored to automatic control through local or supervisory control.

These types of control modifications generally require a latching-type interposing design. Solenoid-operated control switches have become available that can directly replace a manual switch on a switchboard and can closely mimic manual control action. These can be controlled through supervisory control and can frequently provide the proper control behavior.

6.5.4 Intelligent Electronic Devices (IED) for Control

IEDs that have control capability accessible through their communications ports are available. Protective relays, panel meters, recloser controls, and regulators are common devices with control capability. They offer the opportunity to control substation equipment without a traditional interposing relay cluster for the interface, sometimes without even any control-circuit additions. Instead, the control interface is embedded in the IED. When using embedded control interfaces, the SA system designer needs to assess

© 2003 by CRC Press LLC

the security and capability of the interface provided. These requirements should not change just because the interface devices are within an IED. External interposing may be required to meet circuit loads or interrupting duty.

When equipment with IEDs is controlled over a communications channel, the integrity of the channel and the security of the messaging system become important factors. Not all IEDs have select-before-operate capability common to RTUs and SCADA systems. Their protocols also may not have efficient error detection, which could lead to misoperation. In addition, the requirement to have supervisory control disabled for test and maintenance should not impact the IED's primary function.

6.6 Communications Networks inside the Substation

Substation automation systems are based on IEDs that share information and functionality by virtue of their communications capability. The communications interconnections can use hard copper, optical fiber, wireless, or a combination of these. The communications network is the glue that binds the system together. The communications pathways may vary in complexity, depending on the end goals of the system. Ultimately, the internal network passes information and functionality upward to the utility enterprise. Links to the enterprise can take a number of different forms and will not be discussed in this chapter.

6.6.1 Wire Line Networks

6.6.1.1 Point-to-Point Networks

The communications link from an IED to the SA system may be a simple point-to-point connection where the IED connects directly to an SA controller. Many IEDs can connect point to point to a multiported controller or data concentrator that serves as the SA system communications hub. In early integrations, these connections were simple RS-232 serial pathways similar to those between a computer and a modem. RS-232 does not support multiple devices on a pathway. Some IEDs will not communicate on a party line, since they do not support addressing. RS-232 is typically used for short distances, up to 50 ft. Most RS-232 connections are also solid device to device. Isolation requires special hardware. Often, utilities use point-to-point optical-fiber links to connect RS-232 ports together to insure isolation.

6.6.1.2 Point-to-Multipoint Networks

Most automation systems rely on point-to-multipoint connections for IEDs. IEDs that share a common protocol often support a "party line" communications pathway, where they share the channel. An SA controller can use this as a master-slave communications bus, where the SA controller controls the traffic on the channel. All devices on a common bus must be addressable so that only one device communicates at a time. The SA controller communicates with each device one at a time to prevent communications collisions.

RS-485 is the most common point-to-multipoint bus. It is a shielded twisted copper pair, terminated at each end of the bus with a termination resistor equal to the characteristic impedance of the bus cable. RS-485 buses support 32 devices on the channel. Maximum channel length is typically 4000 ft. The longer the bus, the more likely communications error will occur because of reflection on the transmission line; therefore, the longer the bus is, the slower it normally runs. RS-485 can run as fast as 1.0 Mbps, although most operate closer to 19.2 kbps or slower. The RS-485 bus must be linear, end to end. Stubs or taps will cause reflections. RS-485 devices are wired in a daisy-chain arrangement. RS-422 is similar to RS-485 except it is two pairs: one outbound and one inbound. This is in contrast to RS-485, where messages flow in both directions, as the channel is turned around when each device takes control of the bus while transmitting.

6.6.1.3 Peer-to-Peer Networks

There is a growing trend in IED communications to support peer-to-peer messaging. Here, each device has equal access to the communications bus and can message any other device. This is substantially

© 2003 by CRC Press LLC

different than a master-slave environment, even where multiple masters are supported. A peer-to-peer network must provide a means to prevent message collisions, or to detect them and mitigate the collision.

PLC communications and some other control systems use a token passing scheme to give control to devices along the bus. This is often called "token ring." A message is passed from device to device along the communications bus that gives the device authority to transmit messages. Different schemes control the amount of access time each "pass" allows. While the device has the token, it can transmit messages to any other device on the bus. These buses can be RS-485 or higher speed coaxial cable arrangements. When the token is lost or a device fails, the bus must restart. Therefore, token-ring schemes must have a mechanism to recapture order.

Another way to share a common bus as peers is to use a carrier sense multiple access with collision detection (CSMA/CD) scheme. Ethernet, IEEE Standard 802.x, is such a scheme. Ethernet is widely used in the information technology environment and is finding its way into substations. Ethernet can be coaxial cable or twisted-pair cabling. Unshielded twisted-pair (UTP) cable for high-speed ethernet, Category V (CAT V), is widely used for wire ethernet local area networks (LAN). Some utilities are extending their wide area networks (WAN) to substations, where it is becoming both an enterprise pathway and a pathway for SCADA and automation. Some utilities are using LANs within the substation to connect IEDs. A growing number of IEDs support ethernet communication over LANs. Where IEDs cannot support Ethernet, some suppliers offer network interface modules (NIM) to make the transition. A number of different communications protocols are appearing on substation LANs, embedded in a general purpose networking protocol such as TCP/IP.

While Ethernet can be a device-to-device network like RS-485, it is more common to wire devices to a hub or router. Each device has a "home run" connection to the hub. In the hub the outbound path of each device connects to the inbound path of all other devices. All devices hear a message from one device. Hubs can also acquire intelligence and perform a switching service. A switched hub passes outbound messages only to the intended recipient. That allows more messages to pass through without busying all devices with the task of figuring out for whom the message is intended. Routers connect segments of LANs and WANs together to get messages in the right place and to provide security and access control. Hubs and routers require operating power and therefore must be provided with a highly reliable power source in order to function during interruptions in the substation.

6.6.2 Optical Fiber Systems

Fiber optics is an excellent media for communications within the substation. It isolates devices electrically because it is nonconducting. This is very important because high levels of radiated electromagnetic fields and transient voltages are present in the substation enviroment.

Fiber optics can be used in place of copper cable runs to make point-to-point connections. A fiber media converter is required to make the transition from the electrical media to the fiber. They are available in many different configurations. The most common are Ethernet and RS-232 to fiber, but they are also available for RS-485 and RS-422. Fiber is ideal for connecting devices in different substation buildings or out in the switchyard. Figure 6.5 illustrates a SCADA system distributed throughout a substation connected together with a fiber network.

6.6.2.1 Fiber Loops

Low-speed fiber communications pathways are often provided to link multiple substation IEDs on a common channel. The IEDs could be recloser controls, PLCs, or even protective relays distributed throughout the switchyard. While fiber is a point-to-point connection, fiber modems are available that provide a repeater function. Messages pass through the modem, in the RD port and out the TX port, to form a loop as illustrated in the Figure 6.6. When an IED responds to a message, it breaks the loop and sends its message on toward the head of the loop. The fiber cabling is routed around to all devices to make up the loop. A break in the loop will make all IEDs inaccessible. Another approach to this architecture is to use bidirectional modems that have two paths around the loop. This technique is immune to single fiber breaks. It is also easy to service.

© 2003 by CRC Press LLC

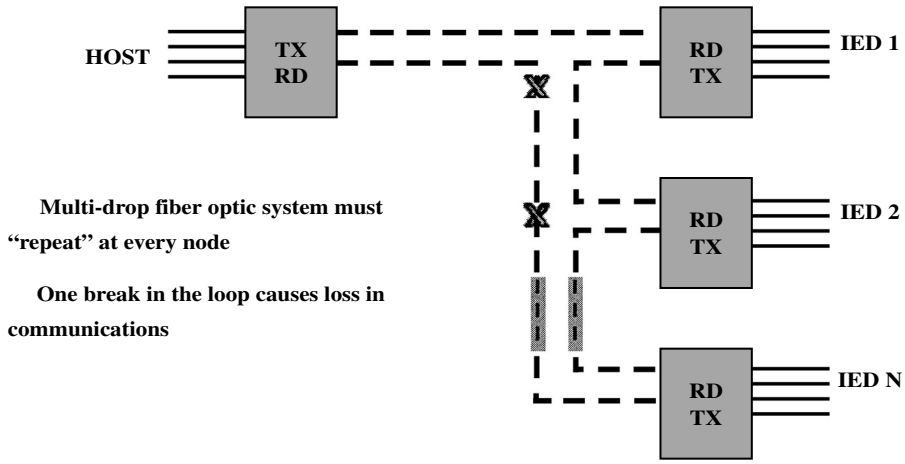

FIGURE 6.5 Fiber-optic loop.

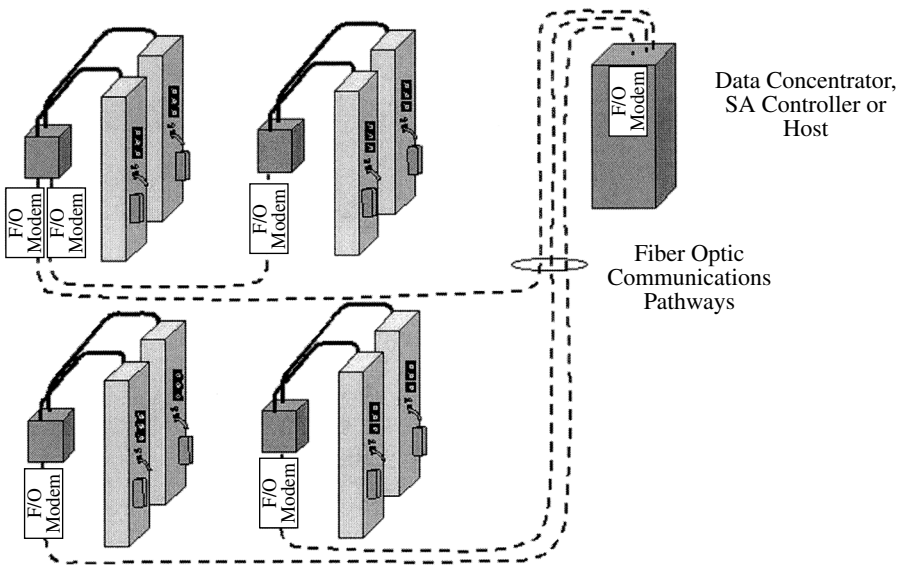

FIGURE 6.6 Fiber-optic network for distributed SCADA and automation.

Some utilities implement bidirectional loops to reach multiple small substations close to an access point to avoid building multiple access points. When the access point is a wire line that requires isolation, the savings can be substantial. Also, the devices may not be accessible except through a power-cable duct system, such as urban areas that are served by low-voltage networks. Here, the extra cost of the bidirectional fiber loop is often warranted.

6.6.2.2 Fiber Stars

Loop topology doesn't always fit substation applications. Some substation layouts better fit a star configuration, where all the fiber runs are "home runs" to a single point. To deal with star topologies, there are several alternatives. The simplest is to use multistrand fiber cables and make a loop with butt splices at the central point. While the cable runs can all be "home runs," the actual configuration is a loop. However, there are star-configuration fiber modems available, which eliminates the need for creating loops. This modem supports multiple fiber-optic (F/O) ports and combines them to a single port.

© 2003 by CRC Press LLC

Typically, the master port is an RS-232 connection, where outgoing messages on the RS-232 port are sent to all outgoing optical ports, and returning messages are funneled from the incoming optical ports to the receive side of the RS-232 port. Another solution is to make the modems at the central point all RS-485, where the messages can be distributed along the RS-485 bus.

6.6.2.3 Message Limitations

In the above discussion there are two limitations imposed by the media. First, there is no provision for message contention and collision detection. Therefore, the messaging protocol must be master-slave. Unsolicited reporting will not work because of the lack of collision detection. In fiber-loop topologies, outgoing messages will be injected into the loop at the head device and travel the full circumference of the loop and reappear as a received message to the sender. This can be confusing to some communications devices at the head end. That device must be able to ignore its own messages.

6.6.2.4 Ethernet over Fiber

As IEDs become network ready and substation SCADA installations take a more network-oriented topology, fiber-optic links for Ethernet will have increasing application in substations. Just as with slower speed fiber connections, Ethernet over fiber is great for isolating devices and regions in the substation. There are media converters and fiber-ready routers, hubs, and switches readily available for these applications. Because Ethernet has a collision detection system, the requirement to control messaging via a master-slave environment is unnecessary. The routers and switches take care of that problem. The star configuration is also easily supported with a multiport fiber router.

6.6.3 Communications between Facilities

Light-fiber (fiber-optic [F/O]) communications systems are readily available to owners of fiber right-of-way. Fiber-optic technology is very wideband and therefore capable of huge data throughputs, of which SCADA data might represent only a tiny fraction of the available capacity.

Utilities have taken different paths in dealing with F/O opportunities. Some have chosen to leverage the value of their existing right of way by building F/O communications networks in their right-of-way and leasing the service to others. Still other utilities have leased just the right-of-way to a telecommunications provider for income or F/O access for their own use. Using a piece of the F/O highway for SCADA or automation is an opportunity. But if the highway needs to be extended to reach the substation, the cost can get high.

Typical F/O systems are based around high-capacity synchronous optical network (SONET) communications technology. Telecommunications people see these pathways as high-utilization assets and tend to try to add as many services to the network as possible. SCADA and automation communications can certainly be part of such a network. However, some industry experts believe that the power system operations communications, SCADA, ought to reside on its own network for security and not share the close proximity to corporate traffic that is part of an F/O network.

F/O technology has another application that is very valuable for SCADA and automation. Because F/O is nonconductive, it is a perfect medium for connecting communicating devices that may not share a solid ground plane. This is typical of substation equipment. These applications do not need the high bandwidth properties and use simple low-speed F/O modems. F/O cable is also low cost. This allows devices in outbuildings to be safely interconnected. It is also an excellent method to isolate radio equipment from substation devices to lessen the opportunity for lightning collected by radios to damage substation devices.

6.7 Testing Automation Systems

Testing assures the quality and readiness of substation equipment. A substation automation system will require testing at several points along its life span. It is important to make allowances for testing within the standard practices of the utility. While testing practices are part of the utility "culture," designing the

© 2003 by CRC Press LLC

testing facilities for substation automation system with enough flexibility to allow for culture change in the future will be beneficial. Surely, testing can have a great impact on the availability of the automation system and, under some circumstances, the availability of substation power equipment and substation reliability. Testing can be a big contributor to the cost of operation and maintenance.

6.7.1 Test Facilities

Substation automation systems integrate IEDs whose primary function may be protection, operator interface, equipment control, and even power-interchange measurement for monetary exchange. A good test plan allows for the automation functions to be isolated from the substation while the primary functions of the IEDs remain in operation.

6.7.1.1 Control

It is necessary to test automation control to confirm control-point mapping to operator interfaces and databases. This is also necessary for programmed control algorithms. Utilities want to be sure that the right equipment operates when called upon. Having the wrong equipment operate, or nothing at all operate, will severely hamper confidence in the system. Since any number of substation IEDs may be configured to control equipment for the system, test methods must be devised to facilitate testing without detrimental impact on the operation of the substation. Disconnect points and operation indicators may be needed for this purpose. For example, if a breaker-failure relay is also the control interface for local and remote control of a circuit breaker, then it should be possible to test control functions without having to shut the breaker down, which would leave the circuit without breaker-failure protection. If the breaker-control portion of the breaker-failure relay can be disabled without disabling its protective function, then testing can be straightforward. However, some utilities solve this problem by disabling all the breaker-failure outputs and allowing the circuit breaker to remain in service without protection for short periods of time while control is being tested. Other utilities rely on a redundant device to provide protection while one device is disabled for testing. These choices are made based on the utility's experience and comfort level. Work rules sometimes dictate testing practices.

While being able to disable control output is necessary, it is also important to be able to verify the control output has occurred when it is stimulated. With IEDs, it is often not possible to view the control output device, since it is buried within the IED. It may be useful to install indicators to show when the output device is active. Otherwise, at least a temporary indicating device is needed to verify that control has taken place. At least once during commissioning, every control interface should operate its connected power equipment to ensure that the interface actually works.

6.7.1.2 Status Points

Status-point mapping must also be tested. Status points appear on operator interface displays and logs of various forms. They are important for knowing the state of substation equipment. Any number of IEDs can supply status information to an automation system. Initially, it is recommended that the source equipment for status points be exercised to evaluate the potential for contact bounce to cause false indications. Simulating contact state changes at the IED input by shorting or opening the input circuits is often used for succeeding tests. Disconnect points make that task easier and safer.

As with control points, some care must be exercised when simulating status points. Status changes will be shown on operator interfaces and entered into logs. Operators will have to know to disregard them and cleanse the logs after testing is completed. Since the IED monitors the status point for its own function, the IED may need to be disabled during status-point testing. If the automation system has programmed logic processes running, it is possible that status changes will propagate into the algorithms and cause unwanted actions to take place. These processes need to be disabled or protected from the test data.

6.7.1.3 Measurements

Measurements may also come from many different substation IEDs. They feed operator interfaces, databases, and logs. They may also feed programmed logic processes. Initially, IEDs that take measurements need to

© 2003 by CRC Press LLC

have their measurements checked for reasonability. Reasonability tests include making sure that the sign of the measurement is as expected in relation to the power system and that the data values accurately represent the measurements. Utilities rarely calibrate measuring IEDs as they once did transducers, but reasonability testing should uncover scaling errors and incorrectly set CT and PT ratios. Most utilities provide disconnect and shorting switches (test switches) so that measuring IEDs can have test sources connected to them. That allows known voltages and currents to be applied and the results checked against the expected value. Test switches can be useful in the future if the accuracy of the IEDs falls into question. Switches also simplify replacing the IED without shutting down equipment if it fails in service.

Some IEDs allow the user to substitute test values in place of "live" measurements. Setting test values can greatly simplify checking the mapping of values through the system. By choosing a signature value, it is easy to discern test from live values as they appear on screens and logs. This feature is also useful for checking alarm limits and for testing programmed logic.

During testing of IED measurements, some care must be exercised to prevent test data from causing operator concerns. Test data will appear on operator interface displays and may trigger alarm messages and make log entries. These must be cleansed from logs after testing is completed. Since measuring IEDs may feed data to programmed logic processes, it is important to disable such processes during testing to prevent unwanted actions. Any substituted values need to be returned to live measurements at the end of testing as well.

6.7.1.4 Programmed Logic

Many substation automation systems include programmed logic as a component of the system. Programmed logic obtains data from substation IEDs and provides some output to the substation. Output often includes control of equipment such as voltage regulation, reactive control, or even switching. Programmed logic is also used to provide interlocks to prevent potentially harmful actions from taking place. These algorithms must be tested to insure they function as planned. This task can be formidable. It requires that data inputs are provided and the outputs checked against expected results. A simulation mode in the logic host can be helpful in this task. Some utilities use the simulator to monitor this input data as the source IEDs are tested. This verifies the point mapping and scaling. They may also use the simulator to monitor the result of the process based on the inputs. Simulators are valuable tools for testing programmed logic. Many programs are so complex that they cannot be fully tested with simulated data; therefore their results may not be verifiable. Some utilities allow their programmed logic to run off of live data with a monitor watching the results for a test period following commissioning to be sure the program is acceptable.

6.7.2 Commissioning Test Plan

Commissioning a substation automation system requires a carefully thought-out test plan. There needs to be collaboration between users, integrators, suppliers, developers, and constructors. Many times, the commissioning test plan is an extension of the factory acceptance test (FAT), assuming a FAT was performed. Normally the FAT does not have enough of the substation pieces to be comprehensive, therefore the real "proof test" will be at commissioning. Once the test plan is in place, it should be rigorously adhered to. Changes to the commissioning test plan should be documented and accepted by all parties. Just as in the FAT test, a record of deviations from expected results should be documented and later remediated.

A key to a commissioning test plan is to make sure every input and output that is mapped in the system is tested and verified. Many times this can not be repeated once the system is in service.

6.7.3 In-Service Testing

Once an automation system is in service it will become more difficult to test it thoroughly. Individual IEDs could be replaced or updated without a complete end-to-end check because of access restriction to portions of the system. Utilities often feel that exchanging "like for like" is not particularly risky.

© 2003 by CRC Press LLC

However, this assumes the new device has been thoroughly tested to insure it matches the device being replaced. Often the same configuration file for the old device is used to program the new device, hence further reducing the risk. Some utilities purchase an automation simulator to further test new additions and replacements.

However, new versions of IEDs, databases, and communications software should make the utility wary of potential problems. It is not unusual for new software to include bugs that had previously been corrected as well as new problems in what were previously stable features. Utilities must decide the appropriate level of testing for new software versions. A thorough simulator and bench test is in order before deploying new software in the field. It is important to know what versions of software are resident in each IED and the system host. Keeping track of the version changes and resulting problems can lead to significant insights.

Utilities must also expect to deal with in-service support issues that are common to integrated systems.

6.8 Summary

The addition of SA systems control impacts station security and deserves a great deal of consideration. It should be recognized that SA control can concentrate station controls in a small area and can increase the vulnerability of station control to human error and accident. This deserves careful attention to the control interface design for SA systems. The security of the equipment installed must ensure freedom from false operation, and the design of operating and testing procedures must recognize and minimize these risks.

© 2003 by CRC Press LLC

7

Substation Integration and Automation

7.1 Introduction 7-1
7.2 Definitions and Terminology 7-2
7.3 Open Systems 7-2
7.4 Architecture Functional Data Paths 7-3
7.5 Substation Integration and Automation System Functional Architecture 7-3
7.6 New vs. Existing Substations 7-3
7.7 Equipment Condition Monitoring 7-4
7.8 Substation Integration and Automation Technical Issues 7-5
System Responsibilities • System Architecture • Substation Host Processor • Substation Local Area Network (LAN) • User Interface • Communication Interfaces • Data Warehouse
7.9 Protocol Fundamentals 7-13
7.10 Protocol Considerations 7-14
Utility Communications Architecture (UCA) • International Electrotechnical Commission (IEC) 61850 • Distributed Network Protocol (DNP)
7.11 Choosing the Right Protocol 7-17
7.12 Communication Protocol Application Areas 7-17
Within the Substation • Substation-to-Utility Enterprise
7.13 Summary 7-18
References 7-19

John D. McDonald
KEMA, Inc.

7.1 Introduction

Electric utility deregulation, economic pressures forcing downsizing, and the marketplace pressures of potential takeovers have forced utilities to examine their operational and organizational practices. Utilities are realizing that they must shift their focus to customer service. Customer service requirements all point to one key element: information — the right amount of information to the right person or computer within the right amount of time. The flow of information requires data communication over extended networks of systems and users. In fact, utilities are among the largest users of data and are the largest users of real-time information.

The advent of industry deregulation has placed greater emphasis on the availability of information, the analysis of this information, and the subsequent decision making to optimize system operation in a competitive environment. The intelligent electronic devices (IED) being implemented in today's substations contain valuable information, both operational and nonoperational, needed by many user groups

0-8493-1703-7/03/$0.00+$1.50

© 2003 by CRC Press LLC

© 2003 by CRC Press LLC

TABLE 7.1 Five-Layer Architecture for Substation Integration and Automation

Utility Enterprise Connection
Substation Automation Applications
IED Integration via Data Concentrator/Substation Host Processor
IED Implementation
Power System Equipment (Transformers, Breakers)

within the utility. The challenge facing utilities is determining a standard integration architecture that can meet the utility's specific needs; can extract the desired operational and nonoperational information; and can deliver this information to the users who have applications to analyze the information.

7.2 Definitions and Terminology

Substation integration and automation can be broken down into five levels, as seen in Table 7.1. The lowest level is the power system equipment, such as transformers and circuit breakers. The middle three levels are IED implementation, IED integration, and substation automation applications. All electric utilities are implementing IEDs in their substations. The focus today is the integration of the IEDs. Once this is done, the focus will shift to what automation applications should run at the substation level. The highest level is the utility enterprise, and there are multiple functional data paths from the substation to the utility enterprise. The five-layer architecture is shown in Table 7.1.

Since the substation integration and automation technology is fairly new, there are no industry standard definitions, except for the definition of an IED. The industry standard definition of an IED is given below, as well as definitions for IED integration and substation automation.

- Intelligent electronic device (IED): Any device incorporating one or more processors with the capability to receive or send data/control from or to an external source (e.g., electronic multifunction meters, digital relays, controllers) [2,10].
- IED integration: Integration of protection, control, and data acquisition functions into a minimal number of platforms to reduce capital and operating costs, reduce panel and control room space, and eliminate redundant equipment and databases.
- Substation automation: Deployment of substation and feeder operating functions and applications ranging from SCADA (supervisory control and data acquisition) and alarm processing to integrated volt/VAr control in order to optimize the management of capital assets and enhance operation and maintenance efficiencies with minimal human intervention.

7.3 Open Systems

An open system is a computer system that embodies supplier-independent standards so that software can be applied on many different platforms and can interoperate with other applications on local and remote systems. An open system is an evolutionary means for a substation control system that is based on the use of nonproprietary, standard software and hardware interfaces. Open systems enable future upgrades available from multiple suppliers at lower cost to be integrated with relative ease and low risk.

The concept of open systems applies to substation integration and automation. It is important to learn about the different *de jure* (legal) and *de facto* (actual) standards and then apply them so as to eliminate proprietary approaches. An open systems approach allows the incremental upgrade of the automation system without the need for complete replacement, as happened in the past with proprietary systems. There is no longer a need to rely on one supplier for complete implementation. Systems and IEDs from competing suppliers are able to interchange and share information. The benefits of open systems include longer expected system life, investment protection, upgradeability and expandability, and readily available third-party components.

© 2003 by CRC Press LLC

TABLE 7.2 Three Functional Data Paths from Substation to Utility Enterprise

Utility Enterprise		
Operational Data-to-SCADA System	Nonoperational Data-to-Data Warehouse	Remote Access to IED
Substation Automation Applications		
IED Integration		
IED Implementation		
Power System Equipment (Transformers, Breakers)		

7.4 Architecture Functional Data Paths

There are three primary functional data paths from the substation to the utility enterprise, as seen in Table 7.2. The most common data path is conveying the operational data (e.g., volts, amps) to the utility's SCADA system every 2 to 4 sec. This information is critical for the utility's dispatchers to monitor and control the power system. The most challenging data path is conveying the nonoperational data to the utility's data warehouse. The challenges associated with this data path include the characteristics of the data (not necessarily points but, rather, files and waveforms), the periodicity of data transfer (not continuous but, rather, on demand), and the protocols used to obtain the data from the IEDs (not standard but, rather, IED supplier's proprietary protocols). Another challenge is whether the data are pushed from the substation into the data warehouse, or pulled from the data warehouse, or both. The third data path is remote access to an IED by "passing through" or "looping through" the substation integration architecture and isolating a particular IED in the substation.

7.5 Substation Integration and Automation System Functional Architecture

The functional architecture diagram in Figure 7.1 shows the three functional data paths from the substation to the utility enterprise, as well as the SCADA system and the data warehouse. The operational data path to the SCADA system utilizes the communication protocol presently supported by the SCADA system. The nonoperational data path to the data warehouse conveys the IED nonoperational data from the substation automation (SA) system to the data warehouse, either being pulled by a data warehouse application from the SA system or being pushed from the SA system to the data warehouse based on an event trigger or time. The remote access path to the substation utilizes a dial-in telephone connection. The GPS (global positioning system) satellite clock time reference is shown, providing a time reference for the SA system and IEDs in the substation. The host processor provides the graphical user interface and the historical information system for archiving operational and nonoperational data. The SCADA interface knows which SA system points are sent to the SCADA system, as well as the SCADA system protocol. The LAN-enabled IEDs can be directly connected to the SA LAN (local area network). The non-LAN-enabled IEDs require a network interface module (NIM) for protocol and physical interface conversion. The IEDs can have various applications, such as equipment condition monitoring (ECM) and relaying, as well as direct (or hardwired) input/output (I/O).

7.6 New vs. Existing Substations

The design of new substations has the advantage of starting with a blank sheet of paper. The new substation will typically have many IEDs for different functions, and the majority of operational data for the SCADA system will come from these IEDs. The IEDs will be integrated with digital two-way communications. The small amount of direct input/output (hardwired) can be acquired using programmable logic controllers (PLC). Typically, there are no conventional remote terminal units (RTU) in new

© 2003 by CRC Press LLC

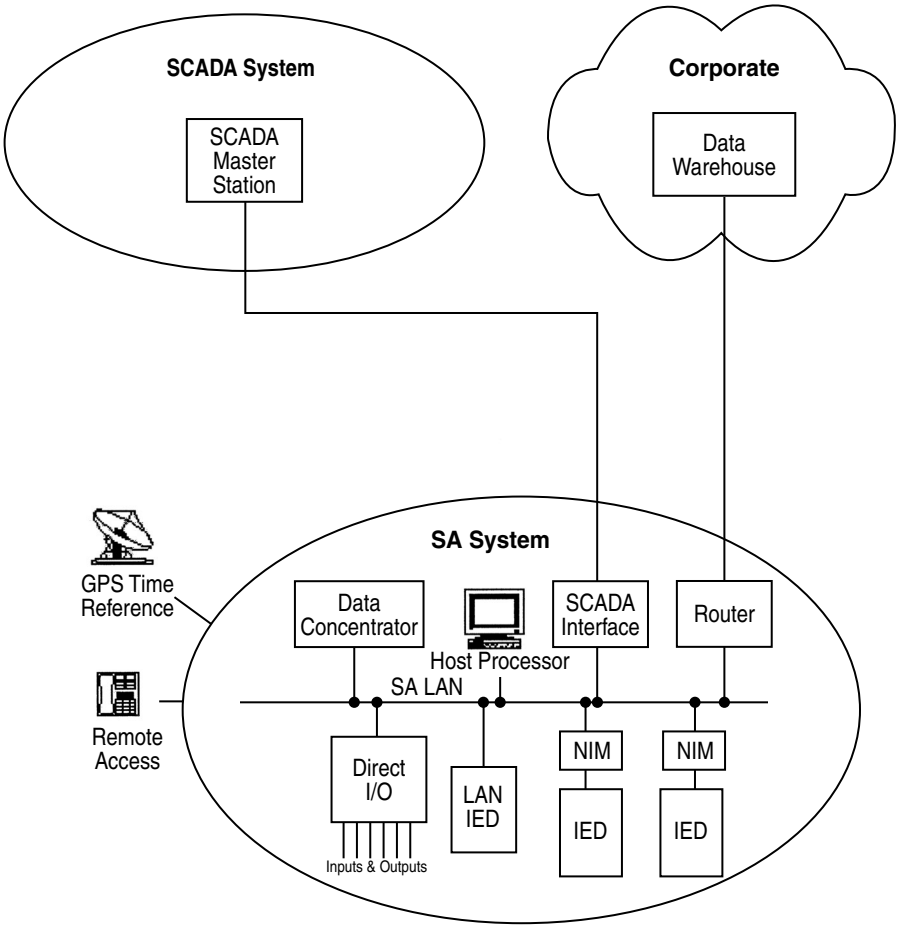

FIGURE 7.1 SA system functional architecture diagram.

substations. The RTU functionality is addressed using IEDs and PLCs and an integration network using digital communications.

In existing substations there are several alternative approaches, depending on whether the substation has a conventional RTU installed. The utility has three choices for their existing conventional substation RTUs: integrate RTU with IEDs; integrate RTU as another substation IED; and retire RTU and use IEDs and PLCs, as with a new substation. First, many utilities have integrated IEDs with existing conventional RTUs, provided the RTUs support communications with downstream devices and support IED communication protocols. This integration approach works well for the operational data path, but it does not support the nonoperational and remote access data paths. The latter two data paths must be done outside of the conventional RTU. Second, if the utility desires to keep their conventional RTU, the preferred approach is to integrate the RTU in the substation integration architecture as another IED. In this way, the RTU can be easily retired when the RTU hardwired direct input/output transitions to come primarily from the IEDs. Third, the RTUs may be old and difficult to support, and the substation automation project might be a good time to retire these older RTUs. The hardwired direct input/output from these RTUs would then come from the IEDs and PLCs, as with a new substation.

7.7 Equipment Condition Monitoring

Many electric utilities have employed equipment condition monitoring (ECM) to maintain electric equipment in top operating condition while minimizing the number of interruptions. With ECM,

© 2003 by CRC Press LLC

equipment operating parameters are automatically tracked to detect the emergence of various abnormal operating conditions. This allows substation operations personnel to take timely action when needed to improve reliability and extend equipment life. This approach is applied most frequently to substation transformers and high-voltage electric supply circuit breakers to minimize the maintenance costs of these devices, to improve their availability, and to extend their useful life.

Equipment availability and reliability can be improved by reducing the amount of off-line maintenance and testing required and by reducing the number of equipment failures. To be truly effective, equipment condition monitoring should be part of an overall condition-based maintenance strategy that has been properly designed and integrated into the regular maintenance program.

ECM IEDs are being implemented by many utilities. In most implementations, the communication link to the IED is via a dial-up telephone line. To facilitate integrating these IEDs into the substation architecture, the ECM IEDs must support at least one of today's widely used IED protocols: Modbus, Modbus Plus, or DNP3 (distributed network protocol). In addition, a migration path to UCA®2 MMS is desired. If the ECM IEDs can be integrated into the substation architecture, the operational data will have a path to the SCADA system, and the nonoperational data will have a path to the utility's data warehouse. In this way, the users and systems throughout the utility that need this information will have access to it. Once the information is brought out of the substation and into the SCADA system and data warehouse, users can share the information in the utility. The "private" databases that result in islands of automation will go away. Therefore, the goal of every utility is to integrate these ECM IEDs into a standard substation integration architecture so that both operational and nonoperational information from the IEDs can be shared by utility users.

7.8 Substation Integration and Automation Technical Issues

There are many technical issues in substation integration and automation. These issues are discussed in this section in the following areas: system responsibilities, system architecture, substation host processor, substation LAN requirements, substation LAN protocols, user interface, communication interfaces, and the data warehouse.

7.8.1 System Responsibilities

The system must interface with all of the IEDs in the substation. This includes polling the IEDs for readings and event notifications. The data from all the IEDs must be sent to the utility enterprise to populate the data warehouse or be sent to an appropriate location for storage of the substation data. The system processes data and control requests from users and from the data warehouse. The system must isolate the supplier from the IEDs by providing a generic interface to the IEDs. In other words, there should be a standard interface regardless of the IED supplier. The system should be updated with a report-by-exception scheme, where status-point changes and analog-point changes are reported only when they exceed their significant deadband. This reduces the load on the communications channel. In some systems, the data are reported in an unsolicited response mode. When the end device has something to report, it does not have to wait for a poll request from a master (master to slave). The device initiates the communication by grabbing the communication channel and transmitting its information.

Current substation integration and automation systems perform protocol translation, converting all the IED protocols from the various IED suppliers. Even with the protocol standardization efforts going on in the industry, there will always be legacy protocols that will require protocol translation.

The system must manage the IEDs and devices in the substation. The system must be aware of the address of each IED, of alternate communication paths, and of IEDs that may be utilized to accomplish a specific function. The system must know the status of all connected IEDs at all times.

The system provides data exchange and control support for the data warehouse. It should use a standard messaging service in the interface (standard protocol). The interface should be independent of any IED protocol and should use a report-by-exception scheme to reduce channel loading.

© 2003 by CRC Press LLC

FIGURE 7.2 Substation automation system.

The system must provide an environment to support user applications. These user applications can be internally written by the utility, or they can be purchased from a third party and integrated into the substation integration and automation system. Figure 7.2 is a photograph of a substation automation system.

7.8.2 System Architecture

The types of data and control that the system will be expected to facilitate are dependent on the choice of IEDs and devices in the system. This must be addressed on a substation-by-substation basis. The primary requirement is that the analog readings be obtained in a way that provides an accurate representation of their values.

The data concentrator stores all analog and status information available at the substation. This information is required for both operational and nonoperational reasons (e.g., fault-event logs, oscillography). There are three levels of data exchange and requirements associated with the substation integration and automation system.

7.8.2.1 Level 1 — Field Devices

Each electronic device (relay, meter, PLC, etc.) has internal memory to store some or all of the following data: analog values, status changes, sequence of events, and power quality. These data are typically stored in a FIFO (first in, first out) queue and vary in the number of events, etc., maintained.

7.8.2.2 Level 2 — Substation Data Concentrator

The substation data concentrator should poll each device (both electronic and other) for analog values and status changes at data collection rates consistent with the utility's SCADA system (e.g., status points every 2 sec, tie-line and generator analogs every 2 sec, and remaining analog values every 2 to 10 sec). The substation data concentrator should maintain a local database.

© 2003 by CRC Press LLC

FIGURE 7.3 SCADA system dispatch center.

7.8.2.3 Level 3 — SCADA System, Data Warehouse

All data required for operational purposes should be communicated to the SCADA system via a communication link from the data concentrator, as seen in Figure 7.3. All data required for nonoperational purposes should be communicated to the data warehouse via a communication link from the data concentrator.

A data warehouse is necessary to support a mainframe or client-server architecture of data exchange between the system and corporate users over the corporate WAN (wide area network). This setup provides users with up-to-date information and eliminates the need to wait for access using a single line of communications to the system, such as telephone dial-up through a modem. Figure 7.4 is a screenshot showing a network status display.

7.8.3 Substation Host Processor

The substation host processor must be based on industry standards and strong networking ability, such as Ethernet, X/Windows, Motif, TCP/IP, UNIX, Windows 2000, Linux, etc. It must also support an open architecture, with no proprietary interfaces or products. An industry-accepted relational database (RDB) with structured query language (SQL) capability and enterprise-wide computing must be supported. The RDB supplier must provide replication capabilities to support a redundant or backup database. A full-graphics user interface (bit or pixel addressable) should be provided with Windows-type capability. There should be interfaces to Windows-type applications (i.e., Excel, Access, etc.). The substation host processor should be flexible, expandable, and transportable to multiple hardware platforms (IBM, Dell, Sun, Compaq, HP, etc.). Should the host processor be single or redundant or distributed? For a smaller distribution substation, it can be a single processor. For a large transmission substation, there may be redundant processors to provide automatic backup in case of failure. Suppliers who offer a distributed processor system with levels of redundancy may be a more cost-effective option for the larger substations. PLCs can be used as controllers, running special application programs at the substation level, coded in ladder logic. Smaller secondary substations will have IEDs but may not have a host processor, instead using a data concentrator for IED integration. This setup lacks a user interface and historical data collection. The IED data from these secondary substations are sent upstream to a larger primary substation that contains

© 2003 by CRC Press LLC

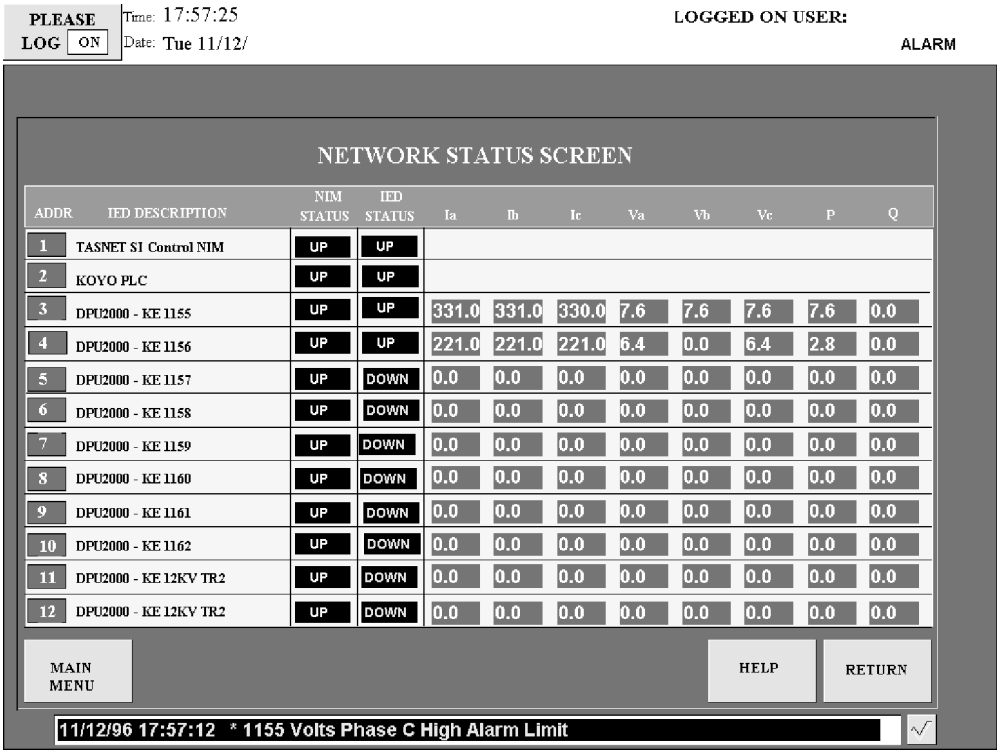

FIGURE 7.4 Network status display.

a complete substation integration and automation system. Figure 7.5 and Figure 7.6 illustrate primary and secondary integration and automation systems, respectively.

7.8.4 Substation Local Area Network (LAN)

7.8.4.1 LAN Requirements

The substation LAN must meet industry standards to allow interoperability and the use of plug-and-play devices. Open-architecture principles should be followed, including the use of industry standard protocols (e.g., TCP/IP, IEEE 802.x (Ethernet), UCA2). The LAN technology employed must be applicable to the substation environment and facilitate interfacing to process-level equipment (IEDs, PLCs) while providing immunity and isolation to substation noise.

The LAN must have enough throughput and bandwidth to support integrated data acquisition, control, and protection requirements. Should the LAN utilize deterministic protocol technologies, such as token ring and token bus schemes? Response times for data transfer must be deterministic and repeatable. (Deterministic: pertaining to a process, model, or variable whose outcome, result, or value does not depend on chance [10].)

The LAN should support peer-to-peer communications capability for high-speed protection functions as well as file-transfer support for IED configuration and PLC programs. (Peer-to-peer: communication between two or more network nodes in which either node can initiate sessions and is able to poll or answer to polls [10].) Priority data transfer would allow low-priority data such as configuration files to be downloaded without affecting time-critical data transfers. The IED and peripheral interface should be a common bus for all input/output. If the LAN is compatible with the substation computer (e.g., Ethernet), a front-end processor may not be needed. There are stringent speed requirements for interlocking and intertripping data transfer, which the LAN must support. The LAN must be able to support bridges and routers for the utility enterprise WAN interface. Test equipment for the LAN must be readily available and economical. Implementation of

© 2003 by CRC Press LLC

FIGURE 7.5 Primary substation integration and automation system.

the LAN technology must be competitive to drive the cost down. For example, Ethernet is more widely used than FDDI, and therefore Ethernet interface equipment costs less.

Figure 7.7 illustrates the configuration of a substation automation system.

7.8.4.2 LAN Protocols

A substation LAN is a communications network, typically high speed, within the substation and extending into the switchyard. The LAN provides the ability to quickly transfer measurements, indications, control adjustments, and configuration and historic data between intelligent devices at the site. The benefits achievable using this architecture include: a reduction in the amount and complexity of the cabling currently required between devices; an increase in the available communications bandwidth to support faster updates and more advanced functions such as virtual connection, file transfer, peer-to-peer communications, and plug-and-play capabilities; and the less tangible benefits of an open LAN architecture, which include laying the foundation for future upgrades, access to third-party equipment, and increased interoperability.

© 2003 by CRC Press LLC

FIGURE 7.6 Secondary substation integration and automation system.

The EPRI-sponsored Utility Substation Communication Initiative performed benchmark and simulation testing of different LAN technologies for the substation in late 1996. The initial substation configuration tested included 47 IEDs with these data types: analog, accumulator, control and events, and fault records. The response requirements were 4 msec for a protection event, 111 transactions per second for SCADA traffic, and 600 sec to transmit a fault record. The communication profiles tested were FMS/Profibus at 12 Mbps, MMS/Trim7/Ethernet at 10 Mbps and 100 Mbps, and switched Ethernet. Initially, the testing was done with four test-bed nodes using four 133-MHz Pentium computers. The four nodes simulated 47 devices in the substation. Analysis of the preliminary results from this testing resulted in a more extensive follow-up test done with 20 nodes using 20 133-MHz Pentium computers. The 20 nodes simulated a large substation issuing four trip signals each to simulate eighty trip signals from eighty different IEDs.

The tests determined that FMS/Profibus at 12 Mbps (fast FMS implementation) could not meet the trip time requirements for protective devices. However, MMS/Ethernet did meet the requirements. In addition, it was found that varying the SCADA load did not impact transaction performance. Moreover, the transmission of oscillographic data and SCADA data did not impact transaction times.

© 2003 by CRC Press LLC

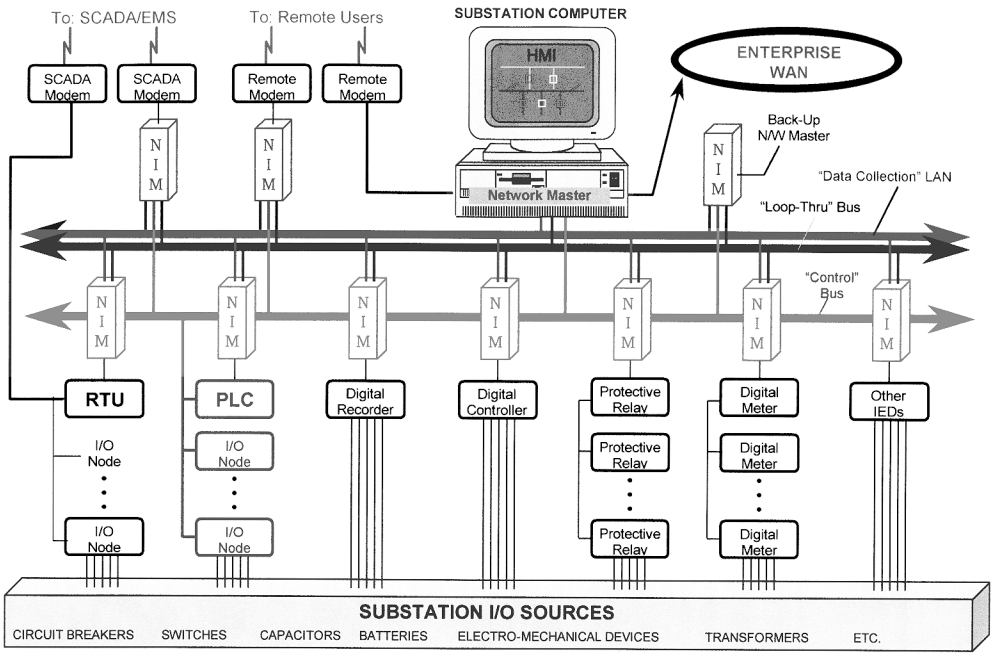

FIGURE 7.7 Configuration of substation automation system. (From National Rural Electric Cooperative Association, *Automating a Distribution Cooperative, from A to Z*, NRECA Cooperative Research Network, Arlington, VA, 1999. With permission.)

7.8.5 User Interface

The user interface in the substation must be an intuitive design to ensure effective use of the system with minimal confusion. An efficient display hierarchy will allow all essential activities to be performed from a few displays. It is critical to minimize or, better yet, eliminate the need for typing. There should be a common look and feel established for all displays. A library of standard symbols should be used to represent substation power apparatus on graphical displays. In fact, this library should be established and used in all substations and coordinated with other systems in the utility, such as the distribution SCADA system, the energy management system, the geographic information system (GIS), the trouble call management system, etc. The field personnel, or the users of the system, should be involved in determining what information should be on the different displays. Multiple databases should be avoided, such as a database for an IED associated with a third-party user-interface software package (e.g., U.S. Data FactoryLink, BJ Systems RealFlex, Intellution, Wonderware, etc.).

The substation one-line displays may be similar in appearance to the displays on a distribution management system or an energy management system. Figure 7.8 shows a typical substation one-line display. The functionality of an analog panel meter is typically integrated in the user interface of the substation automation system. The metered values can be viewed in a variety of formats. Alarm displays can have tabular and graphical display formats. There should be a convenient means to obtain detailed information about the alarm condition. Figure 7.9 shows a typical substation alarm display.

There are two types of logs in the substation. The substation integration and automation system has the capability of logging any information in the system at a specified periodicity. It can log alarms and events with time tags. In other words, any information the system has can be included in a log. A manual log is also in the substation for documenting all activities performed in the substation. The information in the manual log can be included in the system, but it would have to be entered into the system using the keyboard, and typing is not something field personnel normally want to do.

© 2003 by CRC Press LLC

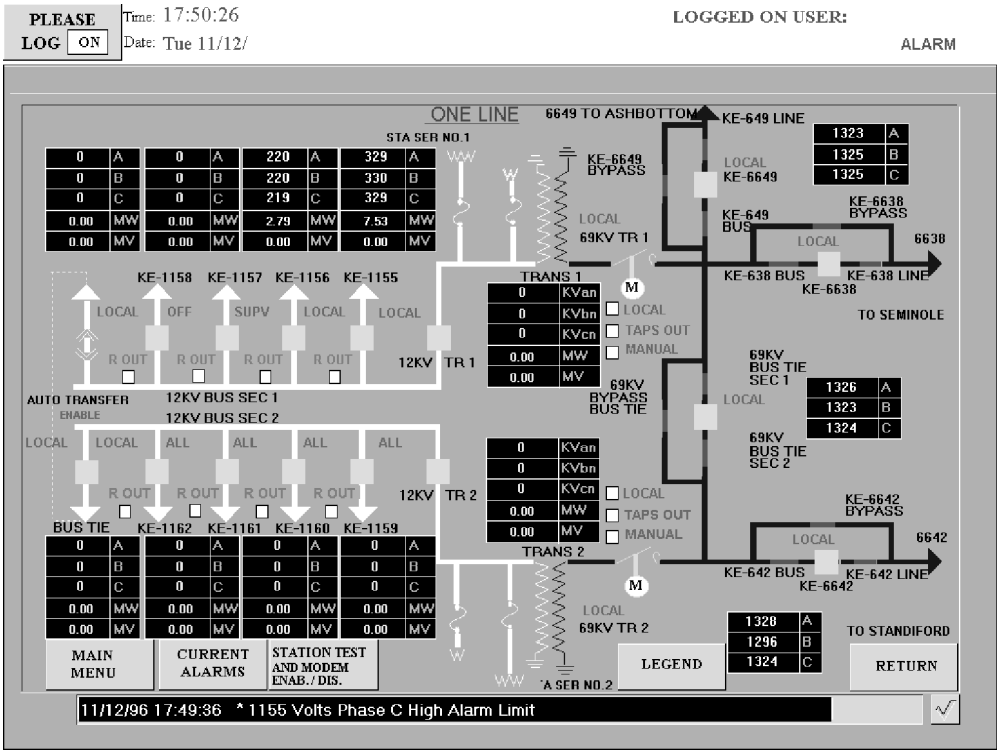

FIGURE 7.8 Substation one-line display.

7.8.6 Communication Interfaces

There are interfaces to substation IEDs to acquire data, determine the operating status of each IED, support all communication protocols used by the IEDs, and support standard protocols being developed. There may be an interface to the energy management system (EMS) that allows system operators to monitor and control each substation and the EMS to receive data from the substation integration and automation system at different periodicities. There may be an interface to the distribution management system with the same capabilities as the EMS interface. There may also be an interface to a capacitor control system that allows (a) control of switched capacitor banks located on feeders emanating from the substation, (b) monitoring of VArs on all three phases for the decision to switch the capacitor bank, and (c) verification that the capacitor bank did switch. There is always an interface for remote access capabilities — providing authorized access to the system via dial-in telephone or a secure network connection — to obtain data and alarms, execute diagnostic programs, and retrieve results of diagnostic programs. Lastly, there is an interface to a time-standard source. A time reference unit (TRU) is typically provided at each substation for outputting time signals to the substation integration and automation system IEDs, controllers, and host computers. The GPS time standard is used and synchronized to GPS satellite time. The GPS system includes an alphanumeric display for displaying time, satellite tracking status, and other setup parameters.

7.8.7 Data Warehouse

The data warehouse enables users to access substation data while maintaining a firewall to protect substation control and operation functions. (A firewall protects a trusted network from an outside, "untrusted" network — a difficult job to do quickly and efficiently, since the firewall must inspect each network communication and decide whether to allow it to cross over to the trusted network [18].) Both

© 2003 by CRC Press LLC

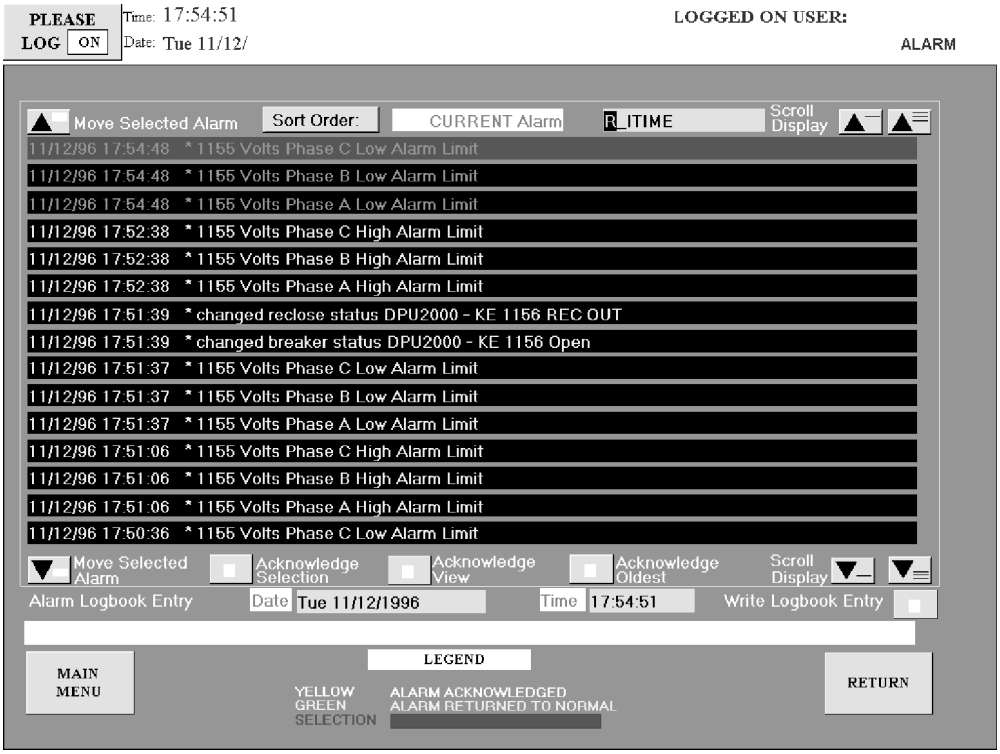

FIGURE 7.9 Substation alarm display.

operational and nonoperational data (e.g., fault-event logs, oscillographic data) are needed in the data warehouse. The utility must determine who will use the substation automation system data, the nature of their application, the type of data needed, how often the data are needed, and the frequency of update required for each user. Examples of user groups within a utility are operations, planning, engineering, SCADA, protection, distribution automation, metering, substation maintenance, and information technology. A possible data warehouse is the information management system (IMS) typically associated with an energy management system (EMS). The IMS is populated by the EMS with both real-time and historical data and uses firewalls to prevent external access beyond the IMS into the EMS.

7.9 Protocol Fundamentals

A communication protocol allows communication between two devices. The devices must have the same protocol (and version) implemented. Any protocol differences will result in communication errors.

If the communication devices and protocols are from the same supplier, i.e., where a supplier has developed a unique protocol to utilize all the capabilities of the two devices, it is unlikely the devices will have trouble communicating. By using a unique protocol of one supplier, a utility can maximize the device's functionality and see a greater return on its investment. However, the unique protocol will constrain the utility to one supplier for support and for purchase of future devices.

If the communication devices are from the same supplier but the protocol is an industry standard protocol supported by the device supplier, the devices should not have trouble communicating. The device supplier has designed its devices to operate with the standard protocol and communicate with other devices using the same protocol and version. By using a standard protocol, the utility can purchase equipment from any supplier that supports the protocol and can therefore comparison-shop for the best prices.

Industry standard protocols typically require more overhead than a supplier's unique protocol. Standard protocols often require a higher-speed channel than a supplier's unique protocol for the same

© 2003 by CRC Press LLC

efficiency or information throughput. However, high-speed communication channels are more prevalent today and can provide adequate efficiency when using industry standard protocols. UCA2 MMS is designed to operate efficiently over 10 Mbps switched, or 100 Mbps shared, or switched Ethernet. If a utility is considering UCA2 MMS as its protocol of choice, a prerequisite should be installation of high-speed communications. If the utility's plan is to continue with a communication infrastructure operating at 1200 to 9600 bps the better choice for an industry standard protocol would be DNP3.

A utility may not be able to utilize all of a device's functionality using an industry standard protocol. If a device was designed before the industry standard protocol, the protocol may not thoroughly support the device's functionality. If the device was designed after the industry standard protocol was developed, the device should have been designed to work with the standard protocol such that all of the device's functionality is available.

The substation integration and automation architecture must allow devices from different suppliers to communicate (interoperate) using an industry standard protocol. Using an industry standard protocol, where suppliers have designed their devices to achieve full functionality with the protocol, a utility has the flexibility to choose the best devices for each application. Though devices from different suppliers can operate and communicate under the standard protocol, each device may have capabilities not supported by another device. There is also risk that the implementations of the industry standard protocol by the two suppliers in each device may have differences. Factory testing will verify that the functions of one device are supported by the protocol of the other device and vice versa. If differences and/or incompatibilities are found, they can be corrected during factory testing.

7.10 Protocol Considerations

There are two capabilities a utility considers for an IED. The primary capability of an IED is its stand-alone capabilities, such as protecting the power system for a relay IED. The secondary capability of an IED is its integration capabilities, such as its physical interface (e.g., RS-232, RS-485, Ethernet) and its communication protocol (e.g., DNP3, Modbus, UCA2 MMS).

Utilities typically specify the IEDs they want to use in the substation rather than giving a supplier a turnkey contract to provide only that supplier's IEDs in the substation. However, utilities typically choose an IED based on its stand-alone capabilities, without considering the IED's integration capabilities. Once the IEDs are installed, the utility may find it difficult to migrate to an integrated system if the IEDs were purchased with the supplier's proprietary protocol and with an undesirable physical interface (e.g., RS-485 purchased when Ethernet is desired). When purchasing IEDs the utility must consider both the stand-alone capabilities and the integration capabilities, even if the IEDs will not be integrated in the near future.

The most common IED communication protocols are Modbus, Modbus Plus, and DNP3. The UCA2 MMS protocol is becoming commercially available from more IED suppliers, and it is being implemented in more utility substations. However, the implementations may not be optimal if the UCA functionality is not built into the IED. In such cases, the utility must add a separate box for the UCA2 MMS protocol apart from the Ethernet network, and this can result in poor performance because of data latency due to the additional box. The utility must be cautious when ordering an IED for use in a system using a protocol other than the supplier's (often proprietary) target protocol, since some IED functionality may be lost. The most common IED networking technology today in substations is serial communications, either RS-232 or RS-485. As more and more IEDs become available with Ethernet ports, the IED networking technology in the substation will be primarily Ethernet.

7.10.1 Utility Communications Architecture (UCA)

The use of international protocol standards is now recognized throughout the electric utility industry as a key to successful integration of the various parts of the electric utility enterprise. Efforts to standardize the protocols that facilitate substation integration and automation have taken place within the framework provided by the Electric Power Research Institute's (EPRI) UCA.

© 2003 by CRC Press LLC

UCA is a standards-based approach to utility data communications that provides for wide-scale integration from the utility enterprise level (as well as between utilities) down to the customer interface, including distribution, transmission, power plant, control center, and corporate information systems. The UCA Version 1.0 specification was issued in December 1991 as part of EPRI Project RP2949, Integration of Utility Communication Systems. While this specification supplied a great deal of functionality, industry adoption was limited, due in part to a lack of detailed specifications about how the specified protocols would actually be used by applications. For example, the manufacturing messaging specification (MMS) ISO/IEC 9506 protocol was specified for real-time data exchange at many levels within a utility. Unfortunately, the protocol did not have specific mappings to MMS for exchanging power system data and schedules or for communicating directly with substation or distribution feeder devices. The result was a continuation in interoperability problems.

The UCA (MMS) forum was started in May 1992 to address these UCA application issues. Six working groups were established to consider issues of MMS application in power plants, control centers, customer interface, substation automation, distribution feeder automation, and profile issues. The MMS forum served as a mechanism for utilities and suppliers to build the technical agreements necessary to achieve a wide range of interoperability using UCA MMS. Out of these efforts came the notion of defining standard power system objects and mapping them onto the services and data types supported by MMS and the other underlying standard protocols. This heavily influenced the definition of the UCA Version 2.0 specification issued in late 1996, which endorses ten different protocol profiles, including transmission control protocol/Internet protocol (TCP/IP) and intercontrol center communications protocol (ICCP), as well as a new set of common application service models for real-time device access.

The EPRI UCA/Substation Automation Project began in the early 1990s to produce industry consensus regarding substation integrated control, protection and data acquisition, and interoperability of substation devices from different manufacturers. The Substation Protocol Reference Specification recommended three of the ten UCA2 profiles for use in substation automation. Future efforts in this project were integrated with the efforts in the Utility Substations Initiative described below.

In mid-1996 American Electric Power hosted the first Utility Substations Initiative meeting as a continuation of the EPRI UCA/Substation Automation Project. Approximately 40 utilities and 25 suppliers are presently participating, having formed supplier/utility teams to define the supplier IED functionality and to implement a standard IED protocol (UCA2 profile) and LAN protocol (Ethernet).

Generic object models for substation and feeder equipment (GOMSFE) are being developed to facilitate suppliers in implementing the UCA/Substation Automation Project's substation and feeder elements of the power-system object model. New IED products with this functionality are now commercially available. The Utility Substations Initiative meets three times each year, in January, May, and September, immediately following the IEEE PES Power System Relaying Committee (PSRC) meetings and in conjunction with the UCA Users Group meetings. Every other meeting includes a supplier interoperability demonstration. The demonstration in September 2002 involved approximately 20 suppliers with products interconnected by a fiber Ethernet LAN interoperating with the UCA2 MMS protocol, the GOMSFE device object models, and Ethernet networks.

The UCA Users Group is a nonprofit organization whose members are utilities, suppliers, and users of communications for utility automation. The mission of the UCA Users Group is to enable utility integration through the deployment of open standards by providing a forum in which the various stakeholders in the utility industry can work together cooperatively as members of a common organization. The group's goals are to:

- Influence, select, and endorse open and public standards appropriate to the utility market based on the needs of the membership
- Specify, develop, and accredit product/system-testing programs that facilitate the field interoperability of products and systems based upon these standards
- Implement educational and promotional activities that increase awareness and deployment of these standards in the utility industry

© 2003 by CRC Press LLC

The UCA Users Group was first formed in 2001 and presently has 34 corporate members, including 17 suppliers, 14 electric utilities, and 3 consultants and other organizations. The UCA Users Group organization consists of a board of directors, with the executive committee and technical committee reporting to the board. The executive committee has three committees reporting to it: marketing, liaison, and membership. The technical committee has a number of subcommittees reporting to it, including substation, communications, products, object models (IEC 61850/GOMSFE), and test procedures. The web site for the UCA Users Group is www.ucausersgroup.org. The UCA Users Group meets three times each year, in January, May, and September, immediately following the IEEE PES PSRC meetings and in conjunction with the UCA Users Group meetings. In addition, the UCA Users Group met at the IEEE PES Substations Committee Annual Meeting April 27–30, 2003, in Sun Valley, Idaho. This meeting included a supplier interoperability demonstration, with 20 suppliers demonstrating the implementation of the UCA2 MMS protocol and Ethernet networking technology into their IEDs and products, and interoperating with the other suppliers' equipment.

7.10.2 International Electrotechnical Commission (IEC) 61850

The UCA2 substation automation work has been brought to IEC Technical Committee (TC) 57 Working Groups (WG) 10, 11, and 12, who are developing IEC 61850, the single worldwide standard for substation automation communications. IEC 61850 is based on both UCA2 and European experience and provides additional functions such as substation configuration language and a digital interface to nonconventional current and potential transformers.

7.10.3 Distributed Network Protocol (DNP)

The development of the distributed network protocol (DNP) was a comprehensive effort to achieve open, standards-based interoperability between substation computers, RTUs, IEDs, and master stations (except intermaster station communications) for the electric utility industry. DNP is based on the standards of the IEC TC 57, WG 03. DNP has been designed to be as close to compliant as possible to the standards as they existed at time of development with the addition of functionality not identified in Europe but needed for current and future North American applications (e.g., limited transport-layer functions to support 2K block transfers for IEDs as well as radio frequency [RF] and fiber support). The present version of DNP is DNP3, which is defined in three distinct levels. Level 1 has the least functionality (for simple IEDs), and Level 3 has the most functionality (for SCADA master station-communication front-end processors).

The short-term benefits of using DNP are interoperability between multi-supplier devices; fewer protocols to support in the field; reduced software costs; no protocol translators needed; shorter delivery schedules; less testing, maintenance, and training; improved documentation; independent conformance testing; and support by independent user group and third-party sources (e.g., test sets, source code). In the long-term, further benefits can be derived from using DNP, including easy system expansion; long product life; more value-added products from suppliers; faster adoption of new technology; and major operations savings

DNP was developed by Harris, Distributed Automation Products, in Calgary, Alberta, Canada. In November 1993 responsibility for defining further DNP specifications and ownership of the DNP specifications was turned over to the DNP User Group, a group composed of utilities and suppliers who are utilizing the protocol. The DNP User Group is a forum of over 300 users and implementers of the DNP3 protocol worldwide. The major objectives of the user group are to maintain control of the protocol and determine the direction in which the protocol will migrate; to review and add new features, functions, and enhancements to the protocol; to encourage suppliers and utilities to adopt the DNP3 protocol as a standard; to define recommended protocol subsets; to develop test procedures and verification programs; and to support implementer interaction and information exchange. The DNP User Group has an annual general meeting in North America, usually in conjunction with the DistribuTECH Conference

© 2003 by CRC Press LLC

in January/February. The web site for DNP and the DNP User Group is www.dnp.org. The DNP User Group Technical Committee is an open volunteer organization of industry and technical experts from around the world. This committee evaluates suggested modifications or additions to the protocol and then amends the protocol description as directed by the user group members.

7.11 Choosing the Right Protocol

There are several factors to consider when choosing the right protocol for your application. First, determine the system area you are most concerned with, e.g., the protocol from a SCADA master station to the SCADA RTUs, a protocol from substation IEDs to an RTU or a PLC, or a local area network in the substation. Second, determine the timing of your installation, e.g., 6 months, 18 to 24 months, or 3 to 5 years. In some application areas, technology is changing so quickly that the timing of your installation can have a great impact on your protocol choice. If you are implementing new IEDs in the substation and need them to be in service in 6 months, you could narrow your protocol choices to DNP3, Modbus, and Modbus Plus. These protocols are used extensively in IEDs today. If you choose an IED that is commercially available with UCA2 MMS capability today, then you can choose UCA2 MMS as your protocol.

If your time frame is 1 to 2 years, you should consider UCA2 MMS as the protocol. Monitor the results of the Utility Substation Communication Initiative utility demonstration sites. These sites have implemented new supplier IED products that are using UCA2 MMS as the IED communication protocol and Ethernet as the substation local area network.

If your time frame is near term (6 to 9 months), make protocol choices from suppliers who are participating in the industry initiatives and are incorporating this technology into their product's migration paths. This will help protect your investment from becoming obsolete by allowing incremental upgrades to new technologies.

7.12 Communication Protocol Application Areas

There are various protocol choices, depending on the protocol application area of your system. Protocol choices vary with the different application areas, which are in different stages of protocol development and levels of industry efforts. The status of development efforts for different applications will help determine realistic plans and schedules for your specific projects.

7.12.1 Within the Substation

The need for a standard IED protocol dates back to the late 1980s. IED suppliers acknowledge that their expertise is in the IED itself – not in two-way communications capability, the communications protocol, or added IED functionality from a remote user. Though the industry made some effort to add communications capability to the IEDs, each IED supplier was concerned that any increased functionality would compromise performance and drive the IED cost so high that no utility would buy it. Therefore, the industry vowed to keep costs competitive and performance high as standardization was incorporated into the IED.

The IED suppliers' lack of experience in two-way communications and communication protocols resulted in crude, primitive protocols and, in some cases, no individual addressability and improper error checking (no select-before-operate). Each IED required its own communication channel, but only limited channels, if any, were available from RTUs. SCADA system and RTU suppliers were pressured to develop the capability to communicate with IEDs purchased by the utilities. Each RTU and IED interface required not only a new protocol, but a proprietary protocol not used by any other IED.

It was at this point that the Data Acquisition, Processing and Control Systems Subcommittee of the IEEE PES Substations Committee recognized the need for a standard IED protocol. The subcommittee formed a task force to examine existing protocols and determine, based on two sets of screening criteria,

© 2003 by CRC Press LLC

the two best candidates. IEEE Standard 1379, Trial Use Recommended Practice for Data Communications between Intelligent Electronic Devices and Remote Terminal Units in a Substation, was published in March 1998. This document did not establish a new communication protocol. To quickly achieve industry acceptance and use, it instead provided a specific implementation of two existing communication protocols in the public domain, DNP3 and IEC 870-5-101.

For IED communications, if your implementation time frame is 6 to 9 months, select from protocols that already exist — DNP3, Modbus, and Modbus Plus. However, if the implementation time frame is 1 year or more, consider EPRI UCA2 with MMS as the communications protocol. Regardless of your time frame, evaluate each supplier's product migration plans. Try to determine if the system will allow migration from today's IED with DNP3 to tomorrow's IED with EPRI UCA2 MMS without replacing the entire IED. This will leave open the option of migrating the IEDs in the substation to EPRI UCA2 in an incremental manner, thus avoiding wholesale replacement. If you choose an IED that is commercially available with UCA2 MMS capability today, then you may want to choose UCA2 MMS as your IED protocol.

7.12.2 Substation-to-Utility Enterprise

This is the area of traditional SCADA communication protocols. The Data Acquisition, Processing and Control Systems Subcommittee of the IEEE PES Substations Committee began developing a recommended practice in the early 1980s in an attempt to standardize master/remote communications practices. At that time, each SCADA system supplier had developed a proprietary protocol based on technology of the time. These proprietary protocols exhibited varied message structures, terminal-to-data circuit terminating equipment (DCE) and DCE-to-channel interfaces, and error detection and recovery schemes. The IEEE Recommended Practice for Master/Remote Supervisory Control and Data Acquisition (SCADA) Communications (IEEE Std. 999-1992) addressed this nonuniformity among the protocols, provided definitions and terminology for protocols, and simplified the interfacing of more than one supplier's RTUs to a master station.

The major standardization effort undertaken in this application area has taken place in Europe as part of the IEC standards-making process. The effort resulted in the development of the IEC 870-5 protocol, which was slightly modified by GE (Canada) to create DNP. This protocol incorporated a pseudo transport layer, allowing it to support multiple master stations. The goal of DNP was to define a generic standards-based (IEC 870-5) protocol for use between IEDs and data concentrators within the substation, as well as between the substation and the SCADA system control center. Success led to the creation of the supplier-sponsored DNP User Group that currently maintains full control over the protocol and its future direction. DNP3 has become a *de facto* standard in the electric power industry and is widely supported by suppliers of test tools, protocol libraries, and services.

7.13 Summary

As we look to the future, it seems the time between the present and the future is shrinking! When a PC bought today is made obsolete in 6 months by a new model with twice the performance at less cost, how can you protect the investments in technology you make today? Obviously, there is no way you can keep up on a continuous basis with all the technology developments in all areas. You must rely on others to keep you informed, and who you select to keep you informed is critical. With every purchase, you must evaluate not only the supplier's present products, but also its future product development plans. Does the supplier continuously enhance and upgrade products? Is the supplier developing new products to meet future needs? Do existing products have a migration path to enhanced and new products? Selecting the right supplier will ensure you stay informed about new and future industry developments and trends and will allow you to access new technologies that will improve your current operation.

© 2003 by CRC Press LLC

References

1. Institute of Electrical and Electronics Engineers, Fundamentals of Supervisory Systems, Paper EH0392-1 PWR presented at IEEE Tutorial 94, IEEE, Piscataway, NJ, 1994.
2. Institute of Electrical and Electronics Engineers, IEEE Standard Definition, Specification and Analysis of Systems Used for Supervisory Control, Data Acquisition, and Automatic Control, IEEE Std. C37.1-1994, IEEE, Piscataway, NJ, 1994.
3. Institute of Electrical and Electronics Engineers, IEEE Standard Electrical Power System Device Function Numbers and Contact Designations, IEEE Std. C37.2-1996, IEEE, Piscataway, NJ, 1996.
4. Institute of Electrical and Electronics Engineers, Communication Protocols, Paper TP 103 presented at IEEE Tutorial 95, IEEE, Piscataway, NJ, 1995.
5. Institute of Electrical and Electronics Engineers, Trial Use Recommended Practice for Data Communications between Intelligent Electronic Devices and Remote Terminal Units in a Substation, IEEE Std. 1379-1997, IEEE, Piscataway, NJ, 1997.
6. Electric Power Research Institute, EPRI UCA Report EL-7547 (multivolume), EPRI, Palo Alto, CA, 1991.
7. Cornice Engineering, Enterprise-Wide Data Integration in a Distribution Cooperative, Cornice Engineering, Durango, CO, 1996.
8. National Rural Electric Cooperative Association, The New Telecommunications Environment: Opportunities for Electric Cooperatives, NRECA, Arlington, VA, 1996.
9. Marks, J., The last piece in the puzzle: the quest for a common communications protocol for utility sensing devices, *Rural Electrification*, 28–30, 1995.
10. Institute of Electrical and Electronics Engineers, An Enhanced Version of the IEEE Standard Dictionary of Electrical and Electronics Terms, IEEE Std. 100 (CD-ROM), IEEE, Piscataway, NJ, 1997.
11. Institute of Electrical and Electronics Engineers, Advancements in Microprocessor-Based Protection and Communication, Paper TP120-0 presented at IEEE Tutorial Course 97, IEEE, Piscataway, NJ, 1997.
12. McDonald, J.D. and Saxton, T.L., Understanding today's protocol standardization efforts, *Utility Automation*, 2, 32–36, Sep./Oct. 1997.
13. Borlase, S.H., Advancing to True Station and Distribution System Integration in Electric Utilities, IEEE PES paper PE-675-PWRD-0-02-1997, IEEE, Piscataway, NJ, 1997.
14. Harmon, G.L., Substation Protection, Control and Monitoring Protocols: Past, Present and Future, Paper SIPSEP-96-12 presented at System Protection Seminar, Monterrey, Mexico, 1996.
15. Adamiak, M., Patterson, R., and Melcher, J., "Inter and Intra Substation Communications: Requirements and Solutions," Paper SIPSEP-96-13 presented at System Protection Seminar, Monterrey, Mexico, 1996.
16. Spinney, A., Which LAN is best for substation automation? *Synergy News*, 5–6, 1997.
17. Substation Automation Communications Demonstration Initiative, Revised Statement of Work, Scope/Requirements Checklist, Review Draft Revision 0.7, Sep. 12, 1997.
18. Holzbaur, H., Firewalls — what every utility should know, *Information Technol. Utilities*, 19–26, 1997.
19. Draft Input for the Utility Communications Architecture Version 2.0, UCA Version 2.0 Profiles, prepared under the auspices of the Profile Working Group of the MMS Forum, Editorial Draft 1.0.
20. Profibus Trade Organization, Profibus Technical Overview, PTO, 1996.
21. Substation LAN Performance Scenario, Version 0.6, 1997.
22. KEMA Consulting, Substation UCA Protocol Reference Specification (review draft), KEMA Consulting, Fairfax, VA, July 1997.
23. UCA 2.0 General Object Models for Substation and Feeder Field Devices, Draft Version 0.7, Dec. 1997.

© 2003 by CRC Press LLC

24. Burger, J., Melcher, J.C., and Robinson, J.T., Substation Communications and Protocols — EPRI UCA 2.0 Demonstration Initiative, Paper EV-108393 presented at EPRI-sponsored Substation Equipment Diagnostic Conference VI, Palo Alto, CA, 1998.
25. Harlow, J.H., Application of UCA Communications to Power Transformers, Paper EV-108393 presented at EPRI Substation Equipment Diagnostic Conference VI, Palo Alto, CA, 1998.
26. Marks, J., Data that talks UCA, *Rural Electrification*, 28–30, Dec. 1992.
27. National Rural Electric Cooperative Association, *Automating a Distribution Cooperative, from A to Z*, NRECA Cooperative Research Network, Arlington, VA, 1999.
28. McDonald, J. et al., *Electric Power Engineering Handbook*, CRC Press, Boca Raton, FL, 2000.
29. McDonald, J., Substation integration and automation — fundamentals and best practices, *IEEE Power & Energy*, 1, Mar. 2003.
30. McDonald, J., Industry Activities in Substation Protocol Standardization, paper presented at EPRI Substation Equipment Diagnostics Conference IX, Palo Alto, CA, 2001.
31. McDonald, J., Doghman, M., and Dahl, B., Present and Future Integration of Diagnostic Equipment Monitoring at OPPD, paper presented at EPRI Substation Equipment Diagnostics Conference IX, Palo Alto, CA, 2001.
32. McDonald, J., Caceres, D., Borlase, S., Janssen, M., and Olaya, J.C., ISA embraces open architecture, *Transmission & Distribution World*, 51(9), 68–75, Oct. 1999.
33. McDonald, J., Keys to an automated future, interview by Chuck Newton, *Transmission & Distribution World*, 51(2), 68–71, Feb. 1999.
34. McDonald, J., Robinson, J., and Swartz, L., Substation Communication and Protocols: Field Trials and International Standards, paper presented at 1998 CEPSI Conference, Pattaya, Thailand.
35. McDonald, J., Caceres, D., Borlase, S., and Janssen, M., Standardized Design of Transmission Substation Automation Systems, paper presented at Congreso del Centro de Argentino de Ingenieros 1998, Buenos Aires.

© 2003 by CRC Press LLC

8

Oil Containment[1]

8.1 Oil-Filled Equipment in Substation [IEEE 980-1994 (R2001)] **8**-2
Large Oil-Filled Equipment • Cables • Mobile Equipment • Oil-Handling Equipment • Oil Storage Tanks • Other Sources

8.2 Spill Risk Assessment **8**-3

8.3 Containment Selection Consideration [IEEE 980-1994 (R2001)] **8**-4

8.4 Oil Spill Prevention Techniques **8**-5
Containment Systems • Discharge Control Systems [IEEE 980-1994 (R2001)] • Warning Alarms and Monitoring [IEEE 980-1994 (R2001)]

References **8**-15

Anne-Marie Sahazizian
Hydro One Networks Inc.

Tibor Kertesz
Hydro One Networks Inc.

Containment and control of oil spills at electric supply substations is a concern for most electric utilities. The environmental impact of oil spills and their cleanup is governed by several federal, state, and local regulations, necessitating increased attention in substations to the need for secondary oil containment, and a Spill Prevention Control and Countermeasure (SPCC) plan. Beyond the threat to the environment, cleanup costs associated with oil spills could be significant, and the adverse community response to any spill is becoming increasingly unacceptable.

The probability of an oil spill occurring in a substation is very low. However, certain substations, due to their proximity to navigable waters or designated wetlands, the quantity of oil on site, surrounding topography, soil characteristics, etc., have or will have a higher potential for discharging harmful quantities of oil into the environment. At minimum, an SPCC plan will probably be required at these locations, and installation of secondary oil-containment facilities might be the right approach to mitigate the problem.

Before an adequate spill prevention plan is prepared and a containment system is devised, the engineer must first be thoroughly aware of the requirements included in the federal, state, and local regulations.

The federal requirements of the U.S. for discharge, control, and countermeasure plans for oil spills are contained in the Code of Federal Regulations, Title 40 (40CFR), Parts 110 and 112. The above regulations only apply if the facility meets the following conditions:

1. Facilities with above-ground storage capacities greater than 2500 l (approximately 660 gal) in a single container or 5000 l (approximately 1320 gal) in aggregate storage, *or*
2. Facilities with a total storage capacity greater than 159,000 l (approximately 42,000 gal) of buried oil storage, *or*

[1]Sections of this chapter reprinted from IEEE Std. 980-1994 (R2001), *IEEE Guide for Containment and Control of Oil Spills in Substations,* 1995, Institute of Electrical and Electronics Engineers, Inc. (IEEE). The IEEE disclaims any responsibility or liability resulting from the placement and use in the described manner. Information is reprinted with permission of the IEEE.

0-8493-1703-7/03/$0.00+$1.50

© 2003 by CRC Press LLC

© 2003 by CRC Press LLC

3. *Any* facility which has spilled more than 3786 l (1000 gal) of oil in a single event or spilled oil in two events occurring within a 12-month period, and
4. Facilities which, due to their location, could reasonably be expected to discharge oil into or upon the navigable waters of the U.S. or its adjoining shorelines.

In other countries, applicable governmental regulations will cover the above requirements.

8.1 Oil-Filled Equipment in Substation [IEEE 980-1994 (R2001)]

A number of electrical apparatus installed in substations are filled with oil that provides the necessary insulation characteristics and assures their required performance. Electrical faults in this power equipment can produce arcing and excessive temperatures that may vaporize insulating oil, creating excessive pressure that may rupture the electrical equipment tanks. In addition, operator errors, sabotage, or faulty equipment may also be responsible for oil releases.

The initial cause of an oil release or fire in electrical apparatus may not always be avoidable, but the extent of damage and the consequences for such an incident can be minimized or prevented by adequate planning in prevention and control.

Described below are various sources of oil spills within substations. Spills from any of these devices are possible. The user must evaluate the quantity of oil present, the potential impact of a spill, and the need for oil containment associated with each oil-filled device.

8.1.1 Large Oil-Filled Equipment

Power transformers, oil-filled reactors, large regulators, and circuit breakers are the greatest potential source of major oil spills in substations, since they typically contain the largest quantity of oil.

Power transformers, reactors, and regulators may contain anywhere from a few hundred to 100,000 l or more of oil (500 to approximately 30,000 gal), with 7500–38,000 l (approximately 2000–10,000 gal) being typical. Substations usually contain one to four power transformers, but may have more.

The higher voltage oil circuit breakers may have three independent tanks, each containing 400–15,000 l (approximately 100–4000 gal) of oil, depending on their rating. However, most circuit breaker tanks contain less than 4500 l (approximately 1200 gal) of oil. Substations may have 10–20 or more oil circuit breakers.

8.1.2 Cables

Substation pumping facilities and cable terminations (potheads) that maintain oil pressure in pipe-type cable installations are another source of oil spills. Depending on its length and rating, a pipe-type cable system may contain anywhere from 5000 l (approximately 1500 gal) up to 38,000 l (approximately 10,000 gal) or more of oil.

8.1.3 Mobile Equipment

Although mobile equipment and emergency facilities may be used infrequently, consideration should be given to the quantity of oil contained and associated risk of oil spill. Mobile equipment may contain up to 30,000 l (approximately 7500 gal) of oil.

8.1.4 Oil-Handling Equipment

Oil filling of transformers, circuit breakers, cables, etc. occurs when the equipment is initially installed. In addition, periodic reprocessing or replacement of the oil may be necessary to ensure that proper insulation qualities are maintained. Oil pumps, temporary storage facilities, hoses, etc. are brought in to accomplish this task. Although oil processing and handling activities are less common, spills from these devices can still occur.

© 2003 by CRC Press LLC

8.1.5 Oil Storage Tanks

Some consideration must be given to the presence of bulk oil storage tanks (either above-ground or below-ground) in substations as these oil tanks could be responsible for an oil spill of significant magnitude. Also, the resulting applicability of the 40CFR, Part 112 rules for these storage tanks could require increased secondary oil containment for the entire substation facility. The user may want to reconsider storage of bulk oil at substation sites.

8.1.6 Other Sources

Station service, voltage, and current transformers, as well as smaller voltage regulators, oil circuit reclosers, capacitor banks, and other pieces of electrical equipment typically found in substations, contain small amounts of insulating oil, usually less than the 2500 l (approximately 660 gal) minimum for a single container.

8.2 Spill Risk Assessment

The risk of an oil spill caused by an electric equipment failure is dependent on many factors, including:

- Engineering and operating practices (i.e., electrical fault protection, loading practices, switching operations, testing, and maintenance).
- Quantities of oil contained within apparatus.
- Station layout (i.e., spatial arrangement, proximity to property lines, streams, and other bodies of water).
- Station topography and site preparation (i.e., slope, soil conditions, ground cover).
- Rate of flow of discharged oil.

Each facility must be evaluated to select the safeguards commensurate with the risk of a potential oil spill.

The engineer must first consider whether the quantities of oil contained in the station exceed the quantities of oil specified in the Regulations, and secondly, the likelihood of the oil reaching navigable waters if an oil spill or rupture occurs. If no likelihood exists, no SPCC plan is required.

SPCC plans must be prepared for each piece of portable equipment and mobile substations. These plans have to be general enough that the plan may be used at any and all substations or facility location.

Both the frequency and magnitude of oil spills in substations can be considered to be very low. The probability of an oil spill at any particular location depends on the number and volume of oil containers, and other site-specific conditions.

Based on the applicability of the latest regulatory requirements, or when an unacceptable level of oil spills has been experienced, it is recommended that a program be put in place to mitigate the problems. Typical criteria for implementing oil spill containment and control programs incorporate regulatory requirements, corporate policy, frequency and duration of occurrences, cost of occurrences, safety hazards, severity of damage, equipment type, potential impact on nearby customers, substation location, and quality-of-service requirements [IEEE 980-1994 (R2001)].

The decision to install secondary containment at new substations (or to retrofit existing substations) is usually based on predetermined criteria. A 1992 IEEE survey addressed the factors used to determine where oil spill containment and control programs are needed. Based on the survey, the criteria in Table 8.1 are considered when evaluating the need for secondary oil containment.

The same 1992 IEEE survey provided no clear-cut limit for the proximity to navigable waters. Relatively, equal support was reported for several choices over the range of 45–450 m (150–1500 feet).

Rarely is all of the equipment within a given substation provided with secondary containment. Table 8.2 lists the 1992 IEEE survey results identifying the equipment for which secondary oil containment is provided.

© 2003 by CRC Press LLC

TABLE 8.1 Secondary Oil-Containment Evaluation Criteria

Criteria	Utilities Responding That Apply This Criteria
Volume of oil in individual device	88%
Proximity to navigable waters	86%
Total volume of oil in substation	62%
Potential contamination of groundwater	61%
Soil characteristics of the station	42%
Location of substation (urban, rural, remote)	39%
Emergency response time if a spill occurs	30%
Failure probability of the equipment	21%
Age of station or equipment	10%

Source: IEEE 980-1994 (R2001).

TABLE 8.2 Secondary Oil-Containment Equipment Criteria

Equipment	Utilities Responding That Provide Secondary Containment
Power transformers	86%
Above-ground oil storage tanks	77%
Station service transformers	44%
Oil circuit breakers	43%
Three-phase regulators	34%
Below-ground oil storage tanks	28%
Shunt reactors	26%
Oil-filling equipment	22%
Oil-filled cables and terminal stations	22%
Single-phase regulators	19%
Oil circuit reclosers	15%

Source: IEEE 980-1994 (R2001).

Whatever the criteria, each substation has to be evaluated by considering the criteria to determine candidate substations for oil-containment systems (both new and retrofit). Substations with planned equipment change-outs and located in environmentally sensitive areas have to be considered for retrofits at the time of the change-out.

8.3 Containment Selection Consideration [IEEE 980-1994 (R2001)]

Containment selection criteria have to be applied in the process of deciding the containment option to install in a given substation. Criteria to be considered include: operating history of the equipment, environmental sensitivity of the area, the solution's cost-benefit ratio, applicable governmental regulations, and community acceptance.

The anticipated cost of implementing the containment measures must be compared to the anticipated benefit. However, cost alone can no longer be considered a valid reason for not implementing containment and/or control measures, because any contamination of navigable waters may be prohibited by government regulations.

Economic aspects can be considered when determining which containment system or control method to employ. Factors such as proximity to waterways, volume of oil, response time following a spill, etc., can allow for the use of less effective methods at some locations.

Due to the dynamic nature of environmental regulations, some methods described in this section of the handbook could come in conflict with governmental regulations or overlapping jurisdictions. Therefore,

© 2003 by CRC Press LLC

TABLE 8.3 Soil Permeability Characteristics

Permeability (cm/sec)	Degree of Permeability	Type of Soil
Over 10^{-1}	High	Stone, gravel, and coarse- to medium-grained sand
10^{-1} to 10^{-3}	Medium	Medium-grained sand to uniform, fine-grained sand
10^{-3} to 10^{-6}	Low	Uniform, fine-grained sand to silty sand or sandy clay
Less than 10^{-6}	Practically impermeable	Silty sand or sandy clay to clay

Source: IEEE 980-1994 (R2001).

determination of which containment system or control method to use must include research into applicable laws and regulations.

Community acceptance of the oil spill containment and control methods is also to be considered. Company policies, community acceptance, customer relations, etc. may dictate certain considerations. The impact on adjacent property owners must be addressed and, if needed, a demonstration of performance experiences could be made available.

8.4 Oil Spill Prevention Techniques

Upon an engineering determination that an oil spill prevention system is needed, the engineer must weigh the advantages and disadvantages that each oil retention system may have at the facility in question. The oil retention system chosen must balance the cost and sophistication of the system to the risk of the damage to the surrounding environment. The risks, and thus the safeguards, will depend on items such as soil, terrain, relative closeness to waterways, and potential size of discharge. Each of the systems that are described below may be considered based on their relative merits to the facility under consideration. Thus, one system will not always be the best choice for all situations and circumstances.

8.4.1 Containment Systems

The utility has to weigh the advantages and disadvantages that each oil retention system may have at the facility in question. Some of the systems that could be considered based on their relative merits to the facility under consideration are presented in the next paragraphs.

8.4.1.1 Yard Surfacing and Underlying Soil

100 to 150 mm (4 to 6 in.) of rock gravel surfacing are normally required in all electrical facility yards. This design feature benefits the operation and maintenance of the facility by providing proper site drainage, reducing step and touch potentials during short-circuit faults, eliminating weed growth, improving yard working conditions, and enhancing station aesthetics. In addition to these advantages, this gravel will aid in fire control and in reducing potential oil spill cleanup costs and penalties that may arise from federal and state environmental laws and regulations.

Yard surfacing is not to be designed to be the primary or only method of oil containment within the substation, but rather has to be considered as a backup or bonus in limiting the flow of oil in the event that the primary system does not function as anticipated.

Soil underlying power facilities usually consists of a nonhomogeneous mass that varies in composition, porosity, and physical properties with depth.

Soils and their permeability characteristics have been adapted from typical references and can be generalized as in the following Table 8.3.

8.4.1.2 Substation Ditching

One of the simplest methods of providing total substation oil spill control is the construction of a ditch entirely around the outside periphery of the station. The ditch has to be of adequate size as to contain

© 2003 by CRC Press LLC

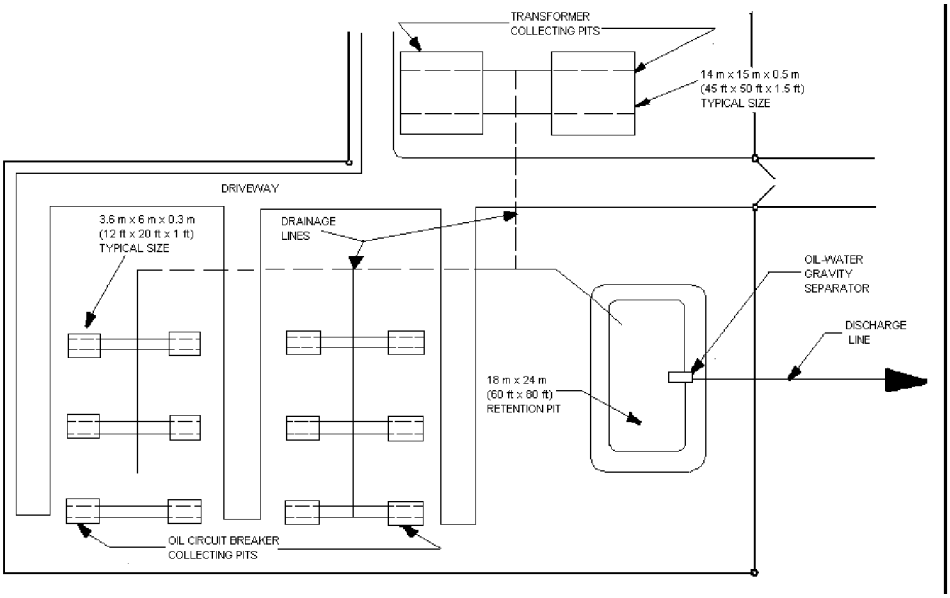

FIGURE 8.3 Typical containment system with retention and collection pits.

all surface run-offs due to rain and insulating oil. These ditches may be periodically drained by the use of valves.

8.4.1.3 Collecting Ponds with Traps

In this system, the complete design consists of a *collection pit* surrounding the protected equipment, drains connecting the collection pits to an open *containment pit,* and an oil trap which is sometimes referred to as a skimming unit and the discharge drain. Figure 8.1 [IEEE 980-1994 (R2001)] presents the general concept of such a containment solution. The collection pit surrounding the equipment is filled with rocks and designed only deep enough to extinguish burning oil. The bottom of this pit is sloped for good drainage to the drainpipe leading to an open containment pit. This latter pit is sized to handle all the oil of the largest piece of equipment in the station. To maintain a dry system in the collecting units, the invert of the intake pipe to the containment pit must be at least the maximum elevation of the oil level. In areas of the country subject to freezing temperatures, it is recommended that the trap (skimmer) be encased in concrete, or other similar means available, to eliminate heaving due to ice action.

8.4.1.4 Oil Containment Equipment Pits

Probably one of the most reliable but most expensive methods of preventing oil spills and insuring that oil will be contained on the substation property is by placing all major substation equipment on or in containment pits. This method of oil retention provides a permanent means of oil containment. These containment pits will confine the spilled oil to relatively small areas that in most cases will greatly reduce the cleanup costs.

One of the most important issues related to an equipment pit is to prevent escape of spilled oil into underlying soil layers. Pits with liners or sealers may be used as part of an oil containment system capable of retaining any discharged oil for an extended period of time. Any containment pit must be constructed with materials having medium to high permeability (above 10^{-3} cm/sec) and be sealed in order to prevent migration of spilled oil into underlying soil layers and groundwater. These surfaces may be sealed and/or lined with any of the following materials:

1. Plastic or rubber — Plastic or rubber liners may be purchased in various thickness and sizes. It is recommended that a liner be selected that is resistant to mechanical injury which may occur due to construction and installation, equipment, chemical attacks on surrounding media, and oil products.

© 2003 by CRC Press LLC

2. Bentonite (clay) — Clay and Bentonite may also be used to seal electrical facility yards and containment pits. These materials can be placed directly in 100 to 150 mm (4 to 6 in.) layers or may be mixed with the existing subsoil to obtain an overall soil permeability of less than 10^{-3} cm/sec.
3. Spray-on fiberglass — Spray-on fiberglass is one of the most expensive pit liners available, but in some cases, the costs may be justifiable in areas which are environmentally sensitive. This material offers very good mechanical strength properties and provides excellent oil retention.
4. Reinforced concrete — 100 to 150 mm (4 to 6 in.) of reinforced concrete may also be used as a pit liner. This material has an advantage over other types of liners in that it is readily available at the site at the time of initial construction of the facility. Concrete has some disadvantages in that initial preparation is more expensive and materials are not as easily workable as some of the other materials.

If materials other than those listed above are used for an oil containment liner, careful consideration must be given to selecting materials, which will not dissolve or become soft with prolonged contact with oil, such as asphalt.

8.4.1.4.1 Fire Quenching Considerations [IEEE 980-1994 (R2001)]

In places where the oil-filled device is installed in an open pit (not filled with stone), an eventual oil spill associated with fire will result in a pool fire around the affected piece of equipment. If a major fire occurs, the equipment will likely be destroyed. Most utilities address this concern by employing active or passive quenching systems, or drain the oil to a remote pit. Active systems include foam or water spray deluge systems.

Of the passive fire quenching measures, pits filled with crushed stone are the most effective. The stone-filled pit provides a fire quenching capability designed to extinguish flames in the event that a piece of oil-filled equipment catches on fire. An important point is that in sizing a stone-filled collecting or retention pit, the final oil level elevation (assuming a total discharge) has to be situated approximately 300 mm (12 in.) below the top elevation of the stone.

All the materials used in construction of a containment pit have to be capable of withstanding the higher temperatures associated with an oil fire without melting. If any part of the containment (i.e., discharge pipes from containment to a sump) melts, the oil will be unable to drain away from the burning equipment, and the melted materials may pose an environmental hazard.

8.4.1.4.2 Volume Requirements

Before a substation oil-containment system can be designed, the volume of oil to be contained must be known. Since the probability of an oil spill occurring at a substation is very low, the probability of simultaneous spills is extremely low. Therefore, it would be unreasonable and expensive to design a containment system to hold the sum total of all of the oil contained in the numerous oil-filled pieces of equipment normally installed in a substation. In general, it is recommended that an oil-containment system be sized to contain the volume of oil in the single largest oil-filled piece of equipment, plus any accumulated water from sources such as rainwater, melted snow, and water spray discharge from fire protection systems. Interconnection of two or more pits to share the discharged oil volume may provide an opportunity to reduce the size requirements for each individual pit.

Typically, equipment containment pits are designed to extend 1.5–3 m (5–10 ft) beyond the edge of the tank in order to capture a majority of the leaking oil. A larger pit size is required to capture all of the oil contained in an arcing stream from a small puncture at the bottom of the tank (such as from a bullet hole). However, the low probability of the event and economic considerations govern the 1.5–3 m (5–10 ft) design criteria. For all of the oil to be contained, the pit or berm has to extend 7.5 m (25 ft) or more beyond the tank and radiators.

The volume of the pit surrounding each piece of equipment has to be sufficient to contain the spilled oil in the air voids between the aggregate of gravel fill or stone. A gravel gradation with a nominal size of 19–50 mm (3/4 to 2 in.) which results in a void volume between 30 and 40% of the pit volume is generally being used. The theoretical maximum amount of oil that can be contained in 1 ft^3 or 1 m^3 of stone is given by the following formulae:

© 2003 by CRC Press LLC

$$\text{Oil Volume}\left[\text{gal}\right] = \frac{\text{void volume of stone}\left[\%\right]}{100 \times 0.1337\ \text{ft}^3} \tag{8.1}$$

$$\text{Oil Volume}\left[\text{l}\right] = \frac{\text{void volume of stones}\left[\%\right]}{100 \times 0.001\ \text{m}^3} \tag{8.2}$$

where 1 gallon = 0.1337 ft^3 and 1 liter = 0.001 m^3 = 1 dm^3.

If the pits are not to be automatically drained of rainwater, then an additional allowance must be made for precipitation. The additional space required would depend on the precipitation for that area and the frequency at which the facility is periodically inspected. It is generally recommended that the pits have sufficient space to contain the amount of rainfall for this period plus a 20% safety margin.

Expected rain and snow accumulations can be determined from local weather records. A severe rainstorm is often considered to be the worst-case event when determining the maximum volume of short-term water accumulation (for design purposes). From data reported in a 1992 IEEE survey, the storm water event design criteria employed ranged from 50 to 200 mm (2 to 8 in.) of rainfall within a short period of time (1–24 h). Generally accepted design criteria is assuming a 1 in 25-year storm event.

The area directly surrounding the pit must be graded to slope away from the pit to avoid filling the pit with water in times of rain.

8.4.1.4.3 Typical Equipment Containment Solutions

Figure 8.2 illustrates one method of pit construction that allows the equipment to be installed partially below ground. The sump pump can be manually operated during periods of heavy rain or automatically operated. If automatic operation is preferred, special precautions must be included to insure that oil is not pumped from the pits. This can be accomplished with either an oil-sensing probe or by having all major equipment provided with oil-limit switches (an option available from equipment suppliers). These limit switches are located just below the *minimum* top oil line in the equipment and will open when the oil level drops below this point.

A typical above-grade pit and/or berm, as shown in Figure 8.3, has maintenance disadvantages but can be constructed relatively easily after the equipment is in place at new and existing electrical facilities. These pits may be emptied manually by gate valves or pumps depending on the facility terrain and layout, or automatically implemented by the use of equipment oil limit switches and dc-operated valves or sump pumps.

Another method of pit construction is shown in Figure 8.4. The figure shows all-concrete containment pits installed around transformers. The sump and the control panel for the oil pump (located inside the sump) are visible and are located outside the containments. Underground piping provides the connection between the two adjacent containments and the sump. The containments are filled with fire-quenching stones.

8.4.2 Discharge Control Systems [IEEE 980-1994 (R2001)]

An adequate and effective station drainage system is an essential part of any oil-containment design. Drains, swales, culverts, catch basins, etc., provide measures to ensure that water is diverted away from the substation. In addition, the liquid accumulated in the collecting pits or sumps of various electrical equipment, or in the retention pit has to be discharged. This liquid consists mainly of water (rainwater, melted snow or ice, water spray system discharges, etc.). Oil will be present only in case of an equipment discharge. It is general practice to provide containment systems that discharge the accumulated water into the drainage system of the substation or outside the station perimeter with a discharge control system.

These systems, described below, provide methods to release the accumulated water from the containment system while blocking the flow of discharged oil for later cleanup. Any collected water has to be

© 2003 by CRC Press LLC

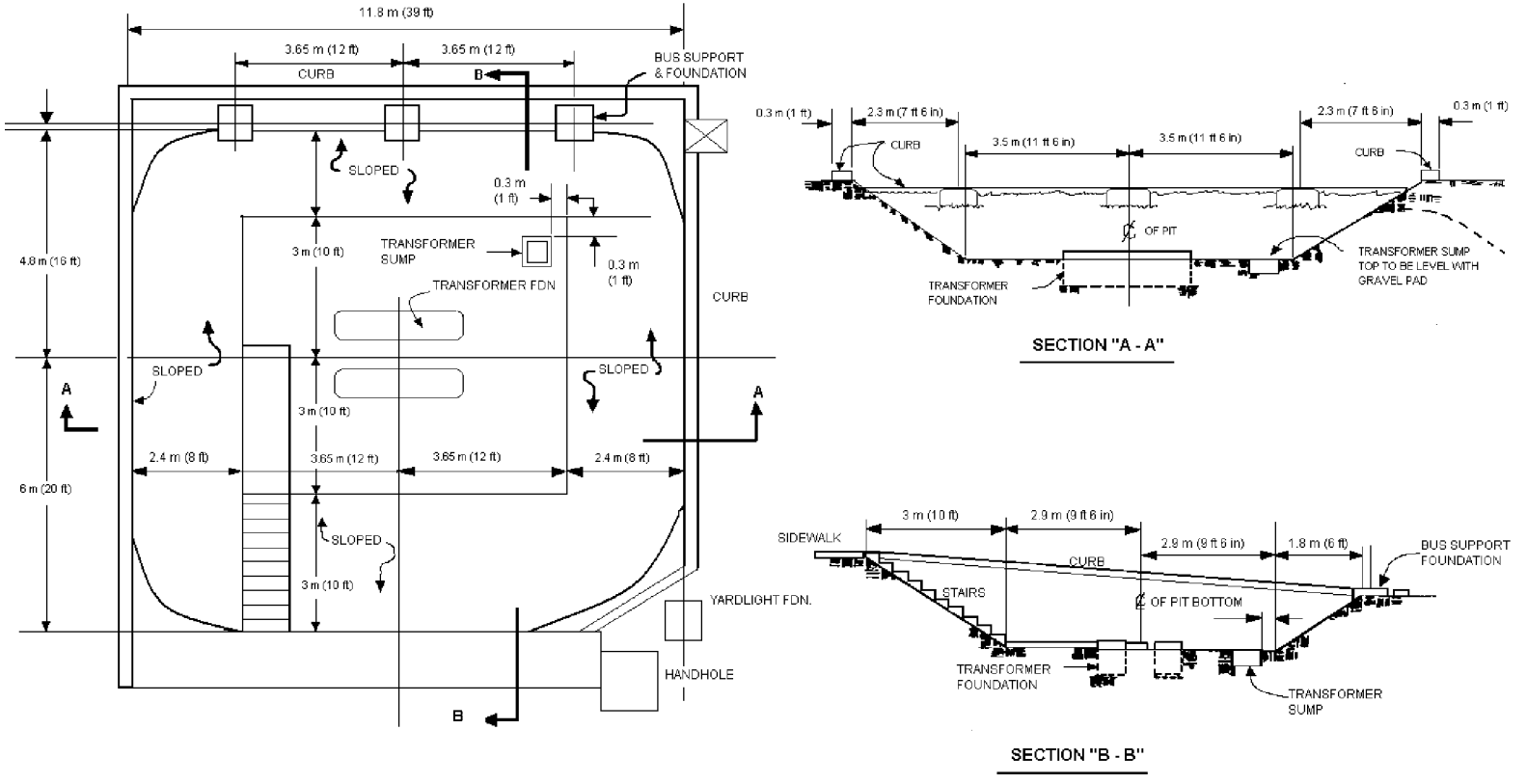

FIGURE 8.2 Typical below-grade containment pit.

© 2003 by CRC Press LLC

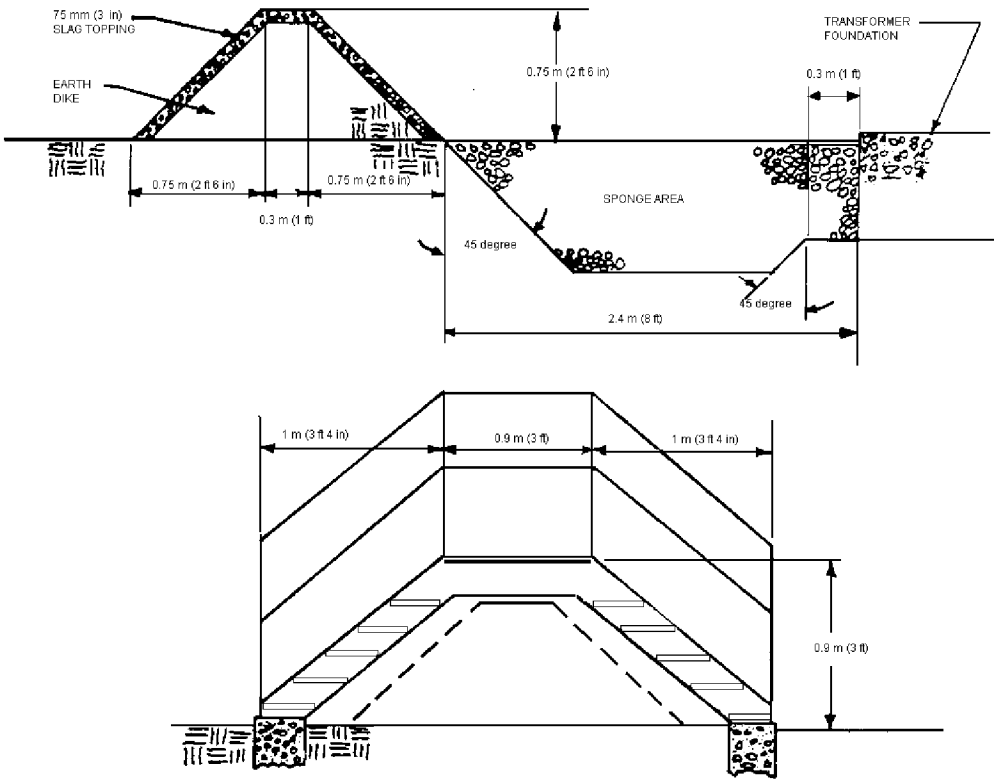

FIGURE 8.3 Typical above-grade berm/pit.

released as soon as possible so that the entire capacity of the containment system is available for oil containment in the event of a spill. Where the ambient temperatures are high enough, evaporation may eliminate much of the accumulated water. However, the system still should be designed to handle the worst-case event.

8.4.2.1 Oil-Water Separator Systems [IEEE 980-1994 (R2001)]

Oil-water separator systems rely on the difference in specific gravity between oil and water. Because of that difference, the oil will naturally float on top of the water, allowing the water to act as a barrier and block the discharge of the oil.

Oil-water separator systems require the presence of water to operate effectively, and will allow water to continue flowing even when oil is present. The presence of emulsified oil in the water may, under some turbulent conditions, allow small quantities of oil to pass through an oil-water separator system.

Figure 8.5 [IEEE 980-1994 (R2001)] illustrates the detail of an oil-water gravity separator that is designed to allow water to discharge from a collecting or retention pit, while at the same time retaining the discharged oil.

Figure 8.6 [IEEE 980-1994 (R2001)] illustrates another type of oil-water separator. This separator consists of a concrete enclosure, located inside a collecting or retention pit and connected to it through an opening located at the bottom of the pit. The enclosure is also connected to the drainage system of the substation. The elevation of the top of the concrete weir in the enclosure is selected to be slightly above the maximum elevation of discharged oil in the pit. In this way, the level of liquid in the pit will be under a layer of fire-quenching stones where a stone-filled pit is used. During heavy accumulation of water, the liquid will flow over the top of the weir into the drainage system of the station. A valve is incorporated in the weir. This normally closed, manually operated valve allows for a controlled discharge of water from the pit when the level of liquid in the pit and enclosure is below the top of the weir.

© 2003 by CRC Press LLC

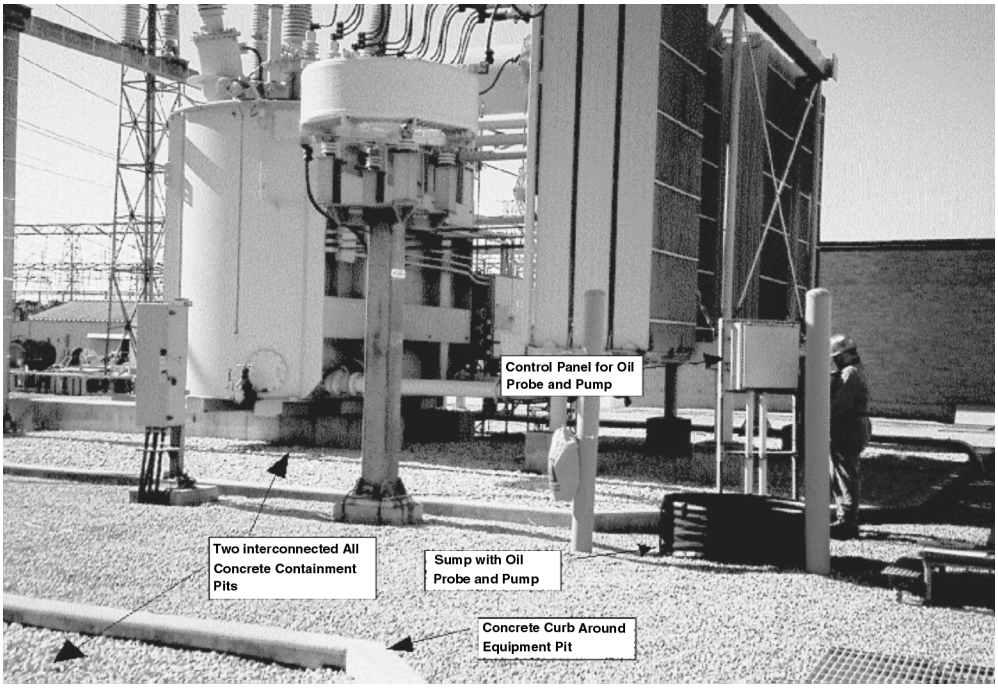

FIGURE 8.4 All-concrete containment pits.

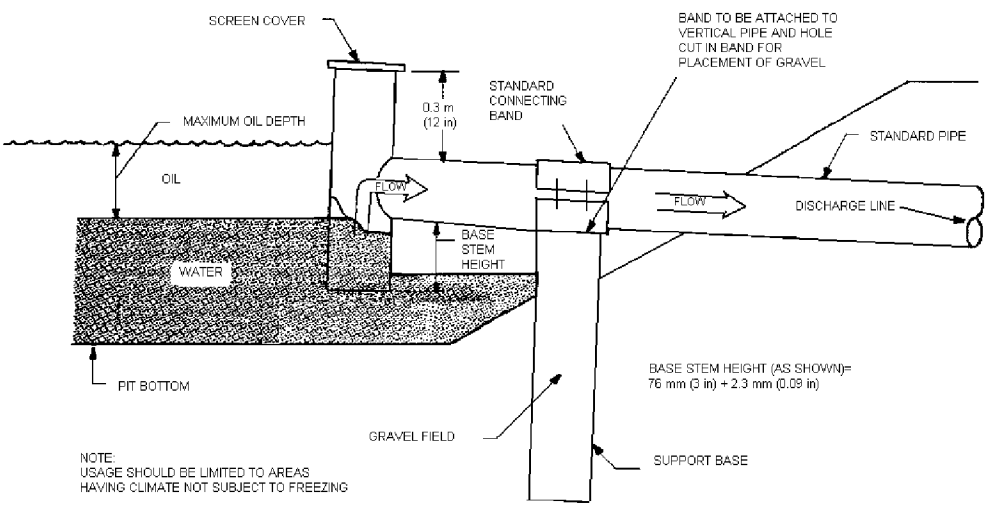

FIGURE 8.5 Oil-water gravity separator.

Figure 8.7 [IEEE 980-1994 (R2001)] provides typical detail of an oil-trap type oil-water separator. In this system, the oil will remain on top of the water and not develop the head pressure necessary to reach the bottom of the inner vertical pipe. In order for this system to function properly, the water level in the manhole portion of the oil trap must be maintained at an elevation no lower than 0.6 m (2 ft) below the inlet elevation. This will ensure that an adequate amount of water is available to develop the necessary hydraulic head within the inner (smaller) vertical pipe, thereby preventing any discharged oil from leaving the site. It is important to note that the inner vertical pipe should be extended downward past the

© 2003 by CRC Press LLC

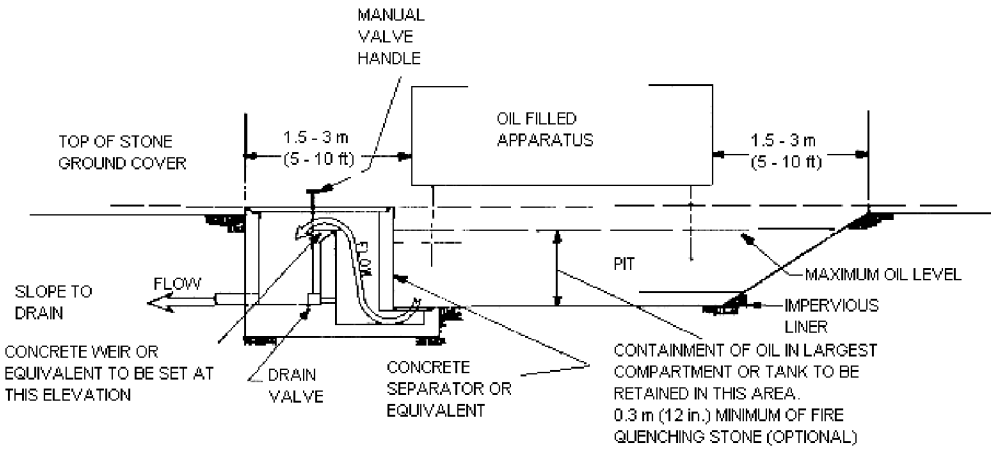

FIGURE 8.6 Equipment containment with oil-water separator.

calculated water-oil interface elevation sufficiently to ensure that oil cannot discharge upward through the inner pipe. Likewise, the inner pipe must extend higher than the calculated oil level elevation in the manhole to ensure that oil does not drain downward into the inner pipe through the vented plug. The reason for venting the top plug is to maintain atmospheric pressure within the vertical pipe, thereby preventing any possible siphon effect.

8.4.2.2 Flow Blocking Systems [IEEE 980-1994 (R2001)]

Described below are two oil flow blocking systems that do not require the presence of water to operate effectively. These systems detect the presence of oil and block all flow (both water and oil) through the discharge system. The best of these systems have been shown to be the most sensitive in detecting and blocking the flow of oil. However, they are generally of a more complex design and may require greater maintenance to ensure continued effectiveness.

Figure 8.8 illustrates an oil stop valve installed inside a manhole. The valve has only one moving part: a ballasted float set at a specific gravity between that of oil and water. When oil reaches the manhole, the float in the valve loses buoyancy and sinks as the oil level increases until it sits on the discharge opening of the valve and blocks any further discharge. When the oil level in the manhole decreases, the float will rise automatically and allow discharge of water from the manhole. Some of the oil stop valves have a weep hole in the bottom of the valve that allows the ballasted float to be released after the oil is removed. This can cause oil to discharge if the level of the oil is above the invert of the discharge pipe.

Figure 8.9 illustrates a discharge control system consisting of an oil-detecting device and a pump installed in a sump connected to the collecting or retention pits of the oil-containment system. The oil-detecting device may use different methods of oil sensing (e.g., capacitance probes, turbidimeters, and fluorescence meters). The capacitance probe shown detects the presence of oil on the surface of the water, based on the significant capacitance difference of these two liquids and, in combination with a logic of liquid level switches, stops the sump pump when the water-oil separation layer reaches a preset height in the sump. Transformer low oil level or gas protection can be added into the control diagram of the pump in order to increase the reliability of the system during major spills.

Some containment systems consist of collecting pits connected to a retention pit or tank that have no link to the drainage system of the substation. Discharge of the liquid accumulated in these systems requires the use of permanently installed or portable pumps. However, should these probes become contaminated, they may cease to function properly. Operating personnel manually activate these pumps. This system requires periodic inspection to determine the level of water accumulation. Before pumping any accumulated liquid, an inspection is required to assess whether the liquid to be pumped out is contaminated.

© 2003 by CRC Press LLC

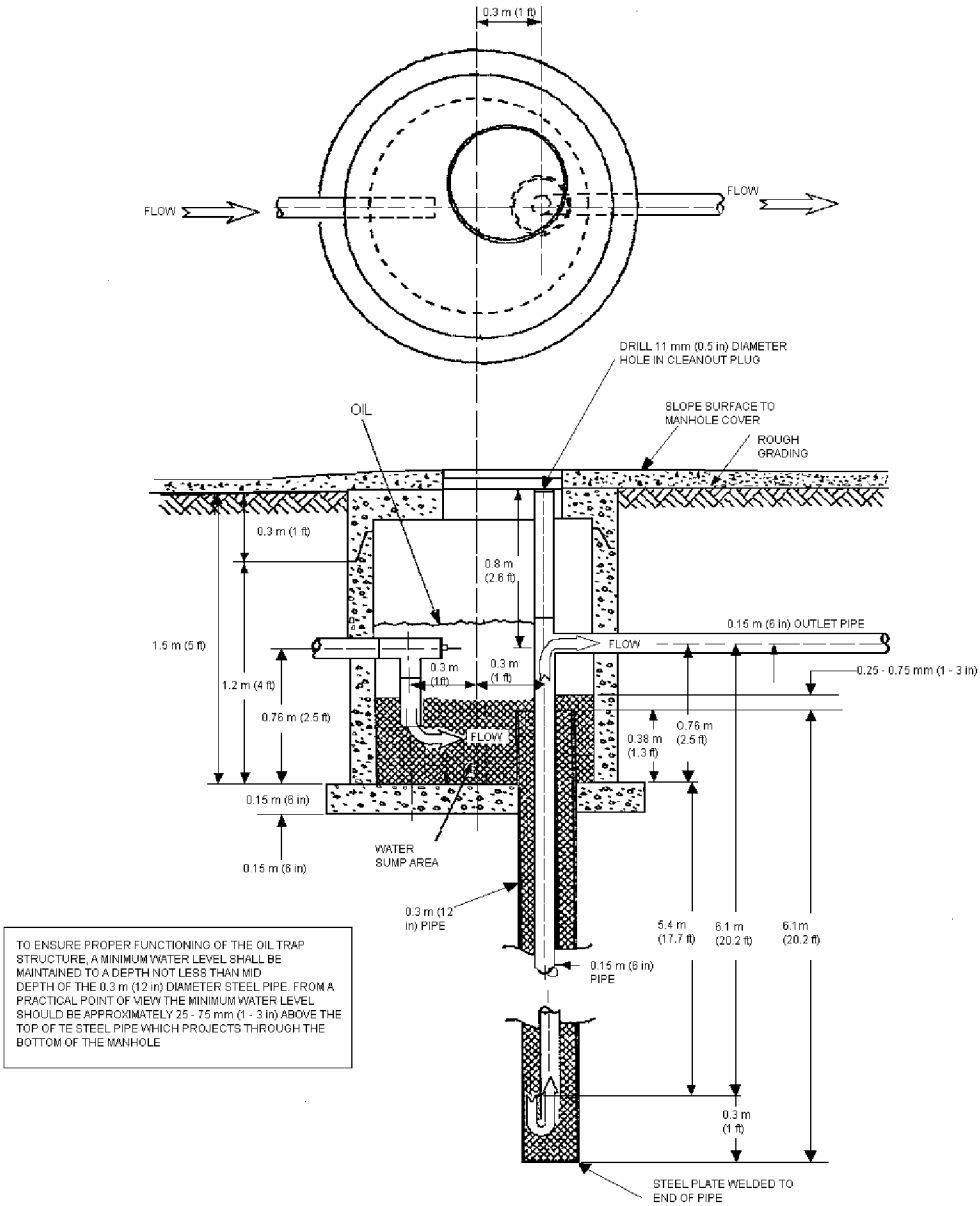

FIGURE 8.7 Oil-trap type oil-water separator.

8.4.3 Warning Alarms and Monitoring [IEEE 980-1994 (R2001)]

In the event of an oil spill, it is imperative that cleanup operations and procedures be initiated as soon as possible to prevent the discharge of any oil, or to reduce the amount of oil reaching navigable waters. Hence, it may be desirable to install an early detection system for alerting responsible personnel of an oil spill. Some governmental regulations may require that the point of discharge (for accumulated water) from a substation be monitored and/or licensed.

The most effective alarms are the ones activated by the presence of oil in the containment system. A low oil-level indicator within the oil-filled equipment can be used; however, it may not activate until 3–6% of the transformer oil has already discharged. In cases where time is critical, it may be worthwhile

© 2003 by CRC Press LLC

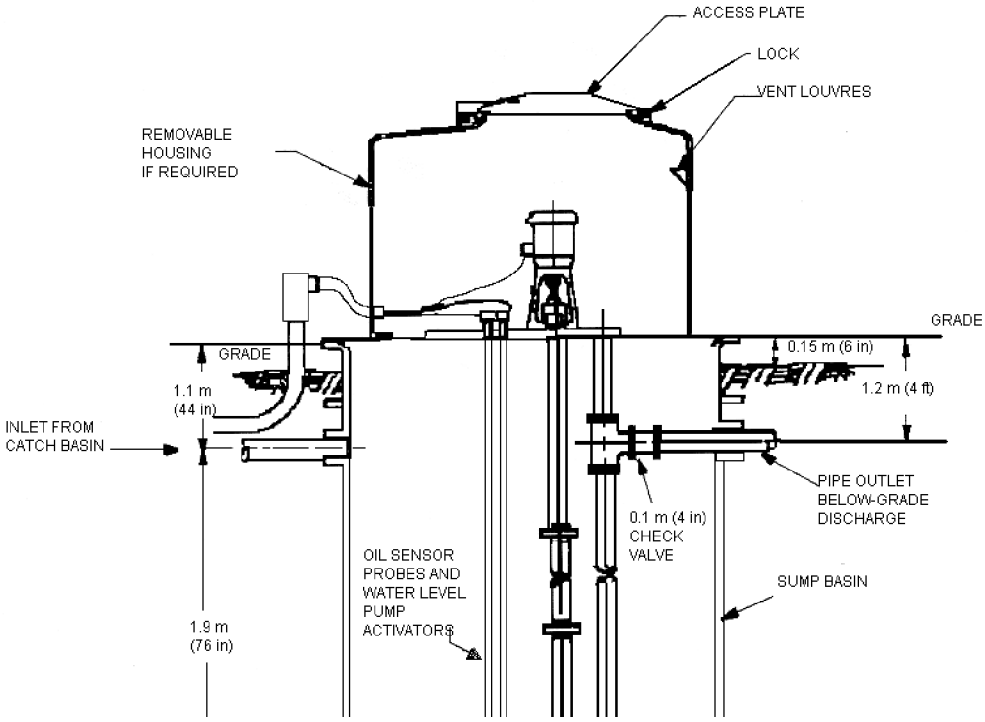

FIGURE 8.8 Oil stop valve installed in manhole.

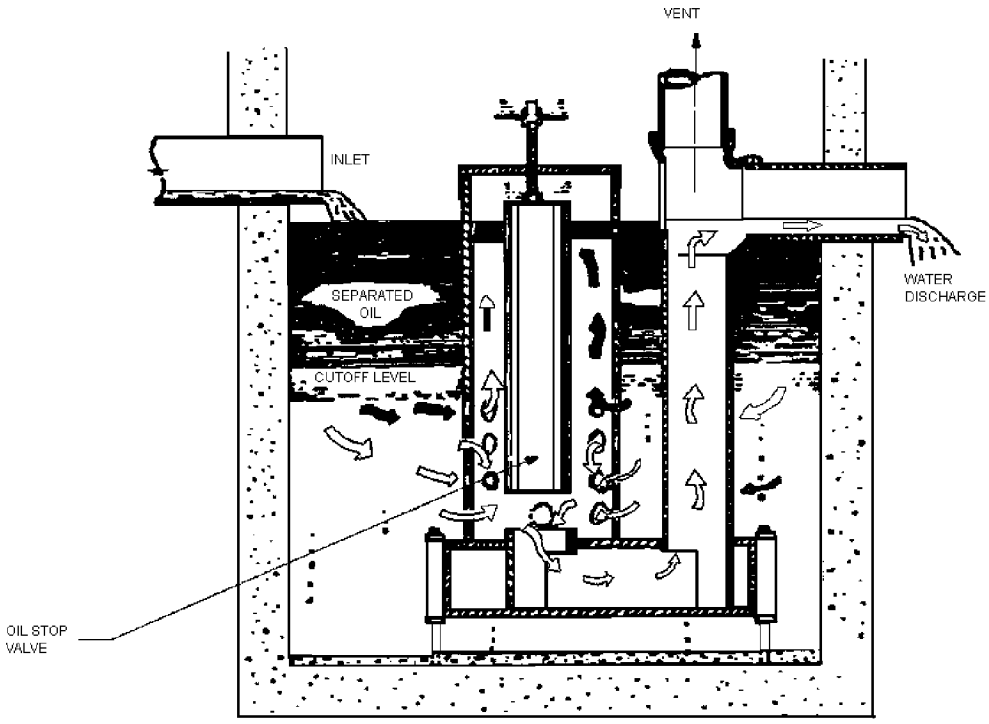

FIGURE 8.9 Sump pump water discharge (with oil-sensing probe).

© 2003 by CRC Press LLC

to also consider a faster operating alarm such as one linked to the transformer sudden gas pressure relay. Interlocks have to be considered as a backup to automatic pump or valve controls.

Alarms are transmitted via supervisory equipment or a remote alarm system to identify the specific problem. The appropriate personnel are then informed so that they can determine if a spill has occurred and implement the SPCC contingency plan.

References

Design Guide for Oil Spill Prevention and Control at Substations, U.S. Department of Agriculture, Rural Electrification Administration Bulletin 65-3, January, 1981.

IEEE Guide for Containment and Control of Oil Spills in Substations, IEEE Std. 980-1994 (R2001).

© 2003 by CRC Press LLC

9

Community Considerations[1]

9.1 Community Acceptance 9-1
9.2 Planning Strategies and Design 9-2
Site Location and Selection, and Preparation • Aesthetics • Noise • Electric and Magnetic Fields • Safety and Security
9.3 Permitting Process 9-10
9.4 Construction 9-11
Site Preparation • Noise • Safety and Security • Site Housekeeping • Hazardous Material
9.5 Operations 9-12
Site Housekeeping • Fire Protection • Hazardous Material
9.6 Defining Terms (IEEE, 1998) 9-13
References 9-13

James H. Sosinski
Consumers Energy

9.1 Community Acceptance

Community acceptance generally encompasses the planning, design, and construction phases of a substation as well as the in-service operation of the substation. It takes into account those issues that could influence a community's willingness to accept building a substation at a specific site. New substations or expansions of existing facilities often require extensive review for community acceptance. Government bodies typically require a variety of permits before construction may begin.

For community acceptance, several considerations should be satisfactorily addressed, including the following:

- Noise
- Site preparations
- Aesthetics
- Fire protection
- Potable water and sewage
- Hazardous materials
- Electric and magnetic fields
- Safety and security

[1]Sections 3, 4, 5, 6, and 7 (excluding sections 4.3.2.2, 4.3.5, 4.4.2.1, 4.4.2.2, 4.4.2.3, 4.4.3.1, 4.4.3.2, 4.4.3.3, 4.4.3.4, 4.4.3.5, 5.1, 5.2, 6.1.4, 6.4, 7.2.1., 7.2.2, tables 1 and 2, and figures 1 and 2) reprinted from IEEE Std. 1127-1998, "IEEE Guide for the Design, Construction, and Operation of Electric Power Substations for Community Acceptance and Environmental Compatibility" Copyright ©1998, by the Institute of Electrical and Electronics Engineers, Inc. (IEEE). The IEEE disclaims any responsibility or liability resulting from the placement and use in the described manner. Information is reprinted with the permission of the IEEE.

0-8493-1703-7/03/$0.00+$1.50

© 2003 by CRC Press LLC

© 2003 by CRC Press LLC

This section on Community Considerations is essentially a condensed version of IEEE Standard 1127-1998.

9.2 Planning Strategies and Design

Planning is essential for the successful design, construction, and operation of a substation. The substation's location and proximity to wetlands, other sensitive areas, and contaminated soils; its aesthetic impact; and the concerns of nearby residents over noise and electric and magnetic fields (EMF) can significantly impact the ability to achieve community acceptance. Public perceptions and attitudes toward both real and perceived issues can affect the ability to obtain all necessary approvals and permits.

These issues can be addressed through presentations to governmental officials and the public. Failure to obtain community acceptance can delay the schedule or, in the extreme, stop a project completely.

9.2.1 Site Location and Selection, and Preparation

The station location (especially for new substations) is the key factor in determining the success of any substation project. Although the site location is based on electric system load growth studies, the final site location may ultimately depend upon satisfying the public and resolving potential community acceptance concerns. If necessary, a proactive public involvement program should be developed and implemented. The best substation site selection is influenced by several factors including, but not limited to, the following:

1. Community attitudes and perceptions
2. Location of nearby wetlands, bodies of water, or environmentally sensitive areas
3. Site contamination (obvious or hidden)
4. Commercial, industrial, and residential neighbors, including airports
5. Permit requirements and ordinances
6. Substation layout (including future expansions) and placement of noise sources
7. Levels of electric and magnetic fields
8. Availability and site clearing requirements for construction staging
9. Access to water and sewer
10. Drainage patterns and storm water management
11. Potential interference with radio, television, and other communication installations
12. Disturbance of archaeological, historical, or culturally significant sites
13. Underground services and geology
14. Accessibility
15. Aesthetic and screening considerations

9.2.1.1 Wetlands

A site-development plan is necessary for a substation project that borders wetlands. Such a plan for the site and its immediate surroundings should include the following:

1. Land-use description
2. Grades and contours
3. Locations of any wetland boundaries and stream-channel encroachment lines
4. Indication of flood-prone areas and vertical distance or access to ground water
5. Indication of existing wildlife habitats and migratory patterns

The plan should describe how site preparation will modify or otherwise impact these areas and what permanent control measures will be employed, including ground water protection.

9.2.1.2 Site Contamination

Soil borings should be taken on any proposed substation site to determine the potential presence of soil contaminants.

© 2003 by CRC Press LLC

There are many substances that, if found on or under a substation site, would make the site unusable or require excessive funds to remediate the site before it would be usable. Some of the substances are as follows:

1. Polychlorinated biphenyls (PCBs)
2. Asbestos
3. Lead and other heavy metals
4. Pesticides and herbicides
5. Radioactive materials
6. Petrochemicals
7. Dioxin
8. Oil

Governmental guidelines for the levels of these substances should be used to determine if the substance is present in large enough quantities to be of concern.

The cost of removal and disposal of any contaminants should be considered before acquiring or developing the site. If a cleanup is needed, the acquisition of another site should be considered as governmental regulations can hold the current owner or user of a site responsible for cleanup of any contamination present, even if substances were deposited prior to acquisition. If a cleanup is initiated, all applicable governmental guidelines and procedures should be followed.

9.2.1.3 Potable Water and Sewage

The substation site may need potable water and sewage disposal facilities. Water may be obtained from municipal or cooperative water utilities or from private wells. Sewage may be disposed of by municipal services or septic systems, or the site could be routinely serviced by portable toilet facilities, which are often used during construction. Where municipal services are used for either water or sewer service, the requirements of that municipality must be met. Septic systems, when used, should meet all applicable local, state, and federal regulations.

9.2.2 Aesthetics

Aesthetics play a major role where community acceptance of a substation is an issue. Sites should be selected that fit into the context of present and future community patterns.

Community acceptability of a site can be influenced by:

1. Concerns about compatibility with present and future land uses
2. Building styles in the surrounding environment
3. Landscape of the site terrain
4. Allowance for buffer zones for effective blending, landscaping, and safety
5. Site access that harmonizes with the community

In addition, the site may need to be large enough to accommodate mobile emergency units and future expansions without becoming congested.

9.2.2.1 Visual Simulation

Traditionally, a site rendering was an artist's sketch, drawing, painting, or photomontage with airbrush retouching, preferably in color, and as accurate and realistic as possible. In recent years, these traditional techniques, although still employed, have given way to two- and three-dimensional computer-generated images, photorealism, modeling, and animation to simulate and predict the impact of proposed developments.

This has led to increased accuracy and speed of image generation in the portrayal of new facilities for multiple-viewing (observer) positions, allowing changes to be made early in the decision-making process while avoiding costly alterations that sometimes occur later during construction.

© 2003 by CRC Press LLC

A slide library of several hundred slides of aesthetic design choices is available from the IEEE. It is a compilation of landscaping, decorative walls and enclosures, plantings, and site location choices that have been used by various utilities worldwide to ensure community acceptance and environmental compatibility.

9.2.2.2 Landscaping and Topography

Landscaping: Where buffer space exists, landscaping can be a very effective aesthetic treatment. On a site with little natural screening, plantings can be used in concert with architectural features to complement and soften the visual effect.

All plantings should be locally available and compatible types, and should require minimum maintenance. Their location near walls and fences should not compromise either substation grounding or the security against trespass by people or animals.

Topography: Topography or land form, whether shaped by nature or by man, can be one of the most useful elements of the site to solve aesthetic and functional site development problems.

Use of topography as a visual screen is often overlooked. Functionally, earth forms can be permanent, visual screens constructed from normal on-site excavating operations. When combined with plantings of grass, bushes, or evergreens and a planned setback of the substation, berms can effectively shield the substation from nearby roads and residents.

Fences and walls: The National Electrical Safety Code® [(NESC®) (Accredited Standards Committee C2-1997)] requires that fences, screens, partitions, or walls be employed to keep unauthorized persons away from substation equipment.

Chain-link fences: This type of fence is the least vulnerable to graffiti and is generally the lowest-cost option. Chain-link fences can be galvanized or painted in dark colors to minimize their visibility, or they can be obtained with vinyl cladding. They can also be installed with wooden slats or colored plastic strips woven into the fence fabric. Grounding and maintenance considerations should be reviewed before selecting such options.

Wood fences: This type of fence should be constructed using naturally rot-resistant or pressure-treated wood, in natural color or stained for durability and appearance. A wood fence can be visually overpowering in some settings. Wood fences should be applied with caution because wood is more susceptible to deterioration than masonry or metal.

Walls: Although metal panel and concrete block masonry walls cost considerably more than chain-link and wood fences, they deserve consideration where natural or landscaped screening does not provide a sufficient aesthetic treatment. Brick and precast concrete can also be used in solid walls, but these materials are typically more costly. These materials should be considered where necessary for architectural compatibility with neighboring facilities. Walls can offer noise reduction (discussed later) but can be subject to graffiti. All issues should be considered before selecting a particular wall or fence type.

9.2.2.3 Color

When substations are not well screened from the community, color can have an impact on the visual effect.

Above the skyline, the function of color is usually confined to eliminating reflective glare from bright metal surfaces. Because the sun's direction and the brightness of the background sky vary, no one color can soften the appearance of substation structures in the course of changing daylight. Below the skyline, color can be used in three aesthetic capacities. Drab coloring, using earth tones and achromatic hues, is a technique that masks the metallic sheen of such objects as chain-link fences and steel structures, and reduces visual contrast with the surrounding landscape. Such coloring should have very limited variation in hues, but contrast by varying paint saturation is often more effective than a monotone coating. Colors and screening can often be used synergistically. A second technique is to use color to direct visual attention to more aesthetically pleasing items such as decorative walls and enclosures. In this use, some brightness is warranted, but highly saturated or contrasting hues should be avoided. A third technique is to brightly color equipment and structures for intense visual impact.

© 2003 by CRC Press LLC

9.2.2.4 Lighting

When attractive landscaping, decorative fences, enclosures, and colors have been used to enhance the appearance of a highly visible substation, it may also be appropriate to use lighting to highlight some of these features at night. Although all-night lighting can enhance substation security and access at night, it should be applied with due concern for nearby residences.

9.2.2.5 Structures

The importance of aesthetic structure design increases when structures extend into the skyline. The skyline profile typically ranges from 6 m to 10 m (20 ft to 35 ft) above ground. Transmission line termination structures are usually the tallest and most obvious. Use of underground line exits will have the greatest impact on the substation's skyline profile. Where underground exits are not feasible, low-profile station designs should be considered. Often, low-profile structures will result in the substation being below the nearby tree line profile.

For additional cost, the most efficient structure design can be modified to improve its appearance. The following design ideas may be used to improve the appearance of structures:

1. Tubular construction
2. Climbing devices not visible in profile
3. No splices in the skyline zone
4. Limiting member aspect ratio for slimmer appearance
5. Use splices other than pipe-flange type
6. Use of gusset plates with right-angle corners not visible in profile
7. Tapering ends of cantilevers
8. Equal length of truss panel
9. Making truss diagonals with an approximate 60° angle to chords
10. Use of short knee braces or moment-resistant connections instead of full-height diagonal braces
11. Use of lap splice plates only on the insides of H-section flanges

9.2.2.6 Enclosures

Total enclosure of a substation within a building is an option in urban settings where underground cables are used as supply and feeder lines. Enclosure by high walls, however, may be preferred if enclosure concealment is necessary for community acceptance.

A less costly design alternative in nonurban locales that are served by overhead power lines is to take advantage of equipment enclosures to modify visual impact. Relay and control equipment, station batteries, and indoor power switchgear all require enclosures. These enclosures can be aesthetically designed and strategically located to supplement landscape concealment of other substation equipment. The exterior appearance of these enclosures can also be designed (size, color, materials, shape) to match neighboring homes or buildings.

Industrial-type, pre-engineered metal enclosures are a versatile and economic choice for substation equipment enclosures. Concrete block construction is also a common choice for which special shaped and colored blocks may be selected to achieve a desired architectural effect. Brick, architectural metal panels, and precast concrete can also be used.

Substation equipment enclosures usually are not exempt from local building codes. Community acceptance, therefore, requires enclosure design, approval, and inspection in accordance with local regulation.

9.2.2.7 Bus Design

Substations can be constructed partly or entirely within aboveground or belowground enclosures. However, cost is high and complexity is increased by fire-protection and heat-removal needs. The following discussion deals with exposed aboveground substations.

© 2003 by CRC Press LLC

Air-insulated substations: The bus and associated substation equipment are exposed and directly visible. An outdoor bus may be multitiered or spread out at one level. Metal or wood structures and insulators support such bus and power line terminations. Space permitting, a low-profile bus layout is generally best for aesthetics and is the easiest to conceal with landscaping, walls, and enclosures. Overhead transmission line terminating structures are taller and more difficult to conceal in such a layout. In dry climates, a low-profile bus can be achieved by excavating the earth area, within which outdoor bus facilities are then located for an even lower profile.

Switchgear: Metal-enclosed or metal-clad switchgear designs that house the bus and associated equipment in a metal enclosure are an alternative design for distribution voltages. These designs provide a compact low-profile installation that may be aesthetically acceptable.

Gas-insulated substation (GIS): Bus and associated equipment can be housed within pipe-type enclosures using sulfur hexafluoride or another similar gas for insulation. Not only can this achieve considerable compactness and reduced site preparation for higher voltages, but it can also be installed lower to the ground. A GIS can be an economically attractive design where space is at a premium, especially if a building-type enclosure will be used to house substation equipment (see IEEE Std. C37.123-1996).

Cable bus: Short sections of overhead or underground cables can be used at substations, although this use is normally limited to distribution voltages (e.g., for feeder getaways or transformer-to-switchgear connections). At higher voltages, underground cable can be used for line-entries or to resolve a specific connection problem.

9.2.3 Noise

Audible noise, particularly continuously radiated discrete tones (e.g., from power transformers), is the type of noise that the community may find unacceptable. Community guidelines to ensure that acceptable noise levels are maintained can take the form of governmental regulations or individual/community reaction (permit denial, threat of complaint to utility regulators, etc.). Where noise is a potential concern, field measurements of the area background noise levels and computer simulations predicting the impact of the substation may be required. The cost of implementing noise reduction solutions (low-noise equipment, barriers or walls, noise cancellation techniques, etc.) may become a significant factor when a site is selected.

Noise can be transmitted as a pressure wave either through the air or through solids. The majority of cases involving the observation and measurement of noise have dealt with noise being propagated through the air. However, there are reported, rare cases of audible transformer noise appearing at distant observation points by propagating through the transformer foundation and underground solid rock formations. It is best to avoid the situation by isolating the foundation from bedrock where the conditions are thought to favor transmission of vibrations.

9.2.3.1 Noise Sources

Continuous audible sources: The most noticeable audible noise generated by normal substation operation consists of continuously radiated audible discrete tones. Noise of this type is primarily generated by power transformers. Regulating transformers, reactors, and emergency generators, however, could also be sources. This type of noise is most likely to be subject to government regulations. Another source of audible noise in substations, particularly in extra high voltage (EHV) substations, is corona from the bus and conductors.

Continuous radio frequency (RF) sources: Another type of continuously radiated noise that can be generated during normal operation is RF noise. These emissions can be broadband and can cause interference to radio and television signal reception on properties adjacent to the substation site. Objectionable RF noise is generally a product of unintended sparking, but can also be produced by corona.

Impulse sources: While continuously radiated noise is generally the most noticeable to substation neighbors, significant values of impulse noise can also accompany normal operation. Switching operations will cause both impulse audible and RF noise with the magnitude varying with voltage, load, and operation speed. Circuit-breaker operations will cause audible noise, particularly operation of air-blast breakers.

© 2003 by CRC Press LLC

9.2.3.2 Typical Noise Levels

Equipment noise levels: Equipment noise levels may be obtained from manufacturers, equipment tendering documents, or test results. The noise level of a substation power transformer is a function of the MVA and BIL rating of the high voltage winding. These transformers typically generate a noise level ranging from 60 to 80 dBA.

Transformer noise will "transmit" and attenuate at different rates depending on the transformer size, voltage rating, and design. Few complaints from nearby residents are typically received concerning substations with transformers of less than 10 MVA capacity, except in urban areas with little or no buffers. Complaints are more common at substations with transformer sizes of 20–150 MVA, especially within the first 170–200 m (500–600 ft). However, in very quiet rural areas where the nighttime ambient can reach 20–25 dBA, the noise from the transformers of this size can be audible at distances of 305 m (1000 ft) or more. In urban areas, substations at 345 kV and above rarely have many complaints because of the large parcels of land on which they are usually constructed.

Attenuation of noise with distance: The rate of attenuation of noise varies with distance for different types of sound sources depending on their characteristics. Point sound sources that radiate equally in all directions will decrease at a rate of 6 dB for each doubling of distance. Cylindrical sources vibrating uniformly in a radial direction will act like long source lines and the sound pressure will drop 3 dB for each doubling of distance. Flat planar surfaces will produce a sound wave with all parts of the wave tracking in the same direction (zero divergence). Hence, there will be no decay of the pressure level due to distance only. The designer must first identify the characteristics of the source before proceeding with a design that will take into account the effect of distance.

A transformer will exhibit combinations of all of the above sound sources, depending on the distance and location of the observation point. Because of its height and width, which can be one or more wavelengths, and its nonuniform configuration, the sound pressure waves will have directional characteristics with very complex patterns. Close to the transformer (near field), these vibrations will result in lobes with variable pressure levels. Hence, the attenuation of the noise level will be very small. If the width (W) and height (H) of the transformer are known, then the near field is defined, from observation, as any distance less than $2\sqrt{WH}$ from the transformer.

Further from the transformer (far field), the noise will attenuate in a manner similar to the noise emitted from a point source. The attenuation is approximately equal to 6 dB for every doubling of the distance. In addition, if a second adjacent transformer produces an identical noise level to the existing transformer (e.g., 75 dBA), the total sound will be 78 dBA for a net increase of only 3 dB. This is due to the logarithmic effect associated with a combination of noise sources.

9.2.3.3 Governmental Regulations

Governmental regulations may impose absolute limits on emissions, usually varying the limits with the zoning of the adjacent properties. Such limits are often enacted by cities, villages, and other incorporated urban areas where limited buffer zones exist between property owners. Typical noise limits at the substation property line used within the industry are as follows:

- Industrial zone<75 dBA
- Commercial zone<65 dBA
- Residential zone<55 dBA

Additional governmental noise regulations address noise levels by limiting the increase above the existing ambient to less than 10 dB. Other regulations could limit prominent discrete tones, or set specific limits by octave bands.

9.2.3.4 Noise Abatement Methods

The likelihood of a noise complaint is dependent on several factors, mostly related to human perceptions. As a result, the preferred noise abatement method is time-dependent as well as site-specific.

© 2003 by CRC Press LLC

Reduced transformer sound levels: Since power transformers, voltage regulators, and reactors are the primary sources of continuously radiated discrete tones in a substation, careful attention to equipment design can have a significant effect on controlling noise emissions at the substation property line. This equipment can be specified with noise emissions below manufacturers' standard levels, with values as much as 10 dB below those levels being typical.

In severely restrictive cases, transformers can be specified with noise emissions 20 dB less than the manufacturers' standard levels, but usually at a significant increase in cost. Also, inclusion of bid evaluation factor(s) for reduced losses in the specification can impact the noise level of the transformer. Low-loss transformers are generally quieter than standard designs.

Low-impulse noise equipment: Outdoor-type switching equipment is the cause of most impulse noise. Switchgear construction and the use of vacuum or puffer circuit breakers, where possible, are the most effective means of controlling impulse emissions. The use of circuit switchers or air-break switches with whips and/or vacuum bottles for transformer and line switching, may also provide impulse-emission reductions over standard air-break switches.

RF noise and corona-induced audible noise control: Continuously radiated RF noise and corona-induced audible noise can be controlled through the use of corona-free hardware and shielding for high-voltage conductors and equipment connections, and through attention to conductor shapes to avoid sharp corners. Angle and bar conductors have been used successfully up to 138 kV without objectionable corona if corners are rounded at the ends of the conductors and bolts are kept as short as possible.

Tubular shapes are typically required above this voltage. Pronounced edges, extended bolts, and abrupt ends on the conductors can cause significant RF noise to be radiated. The diameter of the conductor also has an effect on the generation of corona, particularly in wet weather. Increasing the size of single grading rings or conductor diameter may not necessarily solve the problem. In some cases it may be better to use multiple, smaller diameter grading rings.

Site location: For new substations to be placed in an area known to be sensitive to noise levels, proper choice of the site location can be effective as a noise abatement strategy. Also, locations in industrial parks or near airports, expressways, or commercial zones that can provide almost continuous background noise levels of 50 dB or higher will minimize the likelihood of a complaint.

Larger yard area: Noise intensity varies inversely with distance. An effective strategy for controlling noise of all types involves increasing the size of the parcel of real estate on which the substation is located.

Equipment placement: Within a given yard size, the effect of noise sources on the surroundings can be mitigated by careful siting of the noise sources within the confines of the substation property. In addition, making provisions for the installation of mobile transformers, emergency generators, etc. near the center of the property, rather than at the edges, will lessen the effect on the neighbors.

Barriers or walls: If adequate space is not available to dissipate the noise energy before it reaches the property line, structural elements might be required. These can consist of walls, sound-absorbing panels, or deflectors. In addition, earth berms or below-grade installation may be effective. It may be possible to deflect audible noises, especially the continuously radiated tones most noticeable to the public, to areas not expected to be troublesome. Foliage, despite the potential aesthetic benefit and psychological effect, is not particularly effective for noise reduction purposes.

Properly constructed sound barriers can provide several decibels of reduction in the noise level. An effective barrier involves a proper application of the basic physics of:

1. Transmission loss through masses
2. Sound diffraction around obstacles
3. Standing waves behind reflectors
4. Absorption at surfaces

For a detailed analysis of wall sound barriers, refer to IEEE Std. 1127-1998.

Active noise cancellation techniques: Another solution to the problem of transformer noise involves use of active noise control technology to cancel unwanted noise at the source, and is based on advances

© 2003 by CRC Press LLC

in digital controller computer technology. Active noise cancellation systems can be tuned to specific problem frequencies or bands of frequencies achieving noise reduction of up to 20 dB.

9.2.4 Electric and Magnetic Fields

Electric substations produce electric and magnetic fields. In a substation, the strongest fields around the perimeter fence come from the transmission and distribution lines entering and leaving the substation. The strength of fields from equipment inside the fence decreases rapidly with distance, reaching very low levels at relatively short distances beyond substation fences.

In response to the public concerns with respect to EMF levels, whether perceived or real, and to governmental regulations, the substation designer may consider design measures to lower EMF levels or public exposure to fields while maintaining safe and reliable electric service.

9.2.4.1 Electric and Magnetic Field Sources in a Substation

Typical sources of electric and magnetic fields in substations include the following:

1. Transmission and distribution lines entering and exiting the substation
2. Buswork
3. Transformers
4. Air core reactors
5. Switchgear and cabling
6. Line traps
7. Circuit breakers
8. Ground grid
9. Capacitors
10. Battery chargers
11. Computers

9.2.4.2 Electric Fields

Electric fields are present whenever voltage exists on a conductor. Electric fields are not dependent on the current. The magnitude of the electric field is a function of the operating voltage and decreases with the square of the distance from the source. The strength of an electric field is measured in volts per meter. The most common unit for this application is kilovolts per meter. The electric field can be easily shielded (the strength can be reduced) by any conducting surface such as trees, fences, walls, buildings, and most structures. In substations, the electric field is extremely variable due to the screening effect provided by the presence of the grounded steel structures used for electric bus and equipment support.

Although the level of the electric fields could reach magnitudes of approximately 13 kV/m in the immediate vicinity of high-voltage apparatus, such as near 500-kV circuit breakers, the level of the electric field decreases significantly toward the fence line. At the fence line, which is at least 6.4 m (21 ft) from the nearest live 500-kV conductor (see the NESC), the level of the electric field approaches zero kV/m. If the incoming or outgoing lines are underground, the level of the electric field at the point of crossing the fence is negligible.

9.2.4.3 Magnetic Fields

Magnetic fields are present whenever current flows in a conductor, and are not voltage dependent. The level of these fields also decreases with distance from the source but these fields are not easily shielded. Unlike electric fields, conducting materials such as the earth, or most metals, have little shielding effect on magnetic fields.

Magnetic fields are measured in Webers per square meter (Tesla) or Maxwells per square centimeter (Gauss). One Gauss = 10^{-4} Tesla. The most common unit for this application is milliGauss (10^{-3} Gauss).

Various factors affect the levels of the fields, including the following:

© 2003 by CRC Press LLC

1. Current magnitude
2. Phase spacing
3. Bus height
4. Phase configurations
5. Distance from the source
6. Phase unbalance (magnitude and angle)

Magnetic fields decrease with increasing distance (r) from the source. The rate is an inverse function and is dependent on the type of source. For point sources such as motors and reactors, the function is $1/r^2$; and for single-phase sources such as neutral or ground conductors the function is $1/r$. Besides distance, conductor spacing and phase balance have the largest effect on the magnetic field level because they control the rate at which the field changes.

Magnetic fields can sometimes be shielded by specially engineered enclosures. The application of these shielding techniques in a power system environment is minimal because of the substantial costs involved and the difficulty of obtaining practical designs.

9.2.5 Safety and Security

9.2.5.1 Fences and Walls

The primary means of ensuring public safety at substations is by the erection of a suitable barrier, such as a fence or a wall with warning signs. As a minimum, the barrier should meet the requirements of the NESC and other applicable electrical safety codes. Recommended clearances from substation live parts to the fence are specified in the NESC, and security methods are described in IEEE P1402/D8.

9.2.5.2 Lighting

Yard lighting may be used to enhance security and allow equipment status inspections. A yard-lighting system should provide adequate ground-level lighting intensity around equipment and the control-house area for security purposes without disruption to the surrounding community. High levels of nightly illumination will often result in complaints.

9.2.5.3 Grounding

Grounding should meet the requirement of IEEE Std. 80-1986 to ensure the design of a safe and adequate grounding system. All noncurrent-carrying metal objects in or exiting from substations should be grounded (generally to a buried metallic grid) to eliminate the possibility of unsafe touch or step potentials, which the general public might experience during fault conditions.

9.2.5.4 Fire Protection

The potential for fires exists throughout all stations. Although not a common occurrence, substation fires are an important concern because of potential for long-term outages, personnel injury or death, extensive property and environmental damage, and rapid uncontrolled spreading. Refer to IEEE Std. 979-1994 for detailed guidance and identification of accepted substation fire-protection design practices and applicable industry standards.

9.3 Permitting Process

A variety of permits may be required by the governing bodies before construction of a substation may begin. For the permitting process to be successful, the following factors may have to be considered:

1. Site location
2. Level of ground water
3. Location of wetlands
4. Possibility of existing hazardous materials

© 2003 by CRC Press LLC

5. Need for potable water and sewage
6. Possible noise
7. Aesthetics
8. EMF

Timing for the permit application is a critical factor because the permit application may trigger opposition involvement. If it is determined that the situation requires public involvement, the preparation and implementation of a detailed plan using public participation can reduce the delays and costs associated with political controversy and litigation. In these situations, public involvement prior to permit application can help to build a positive relationship with those affected by the project, identify political and community concerns, obtain an informed consensus from project stakeholders, and provide a basis for the utility to increase its credibility and reputation as a good neighbor.

9.4 Construction

9.4.1 Site Preparation

9.4.1.1 Clearing, Grubbing, Excavation, and Grading

Concerns include the creation of dust, mud, water runoff, erosion, degraded water quality, and sedimentation. The stockpiling of excavated material and the disposal of excess soil, timber, brush, etc. are additional items that should be considered. Protective measures established during the design phase or committed to through the permitting process for ground water, wetlands, flood plains, streams, archeological sites, and endangered flora and fauna should be implemented during this period.

9.4.1.2 Site Access Roads

The preparation and usage of site access roads create concerns that include construction equipment traffic, dust, mud, water runoff, erosion, degraded water quality, and sedimentation. Access roads can also have an impact on agriculture, archaeological features, forest resources, wildlife, and vegetation.

9.4.1.3 Water Drainage

Runoff control is especially important during the construction process. Potential problems include flooding, erosion, sedimentation, and waste and trash carried off the site.

9.4.2 Noise

Noise control is important during construction in areas sensitive to this type of disturbance. An evaluation should be made prior to the start of construction to determine noise restrictions that may be imposed at the construction site.

9.4.3 Safety and Security

Safety and security procedures should be implemented at the outset of the construction process to protect the public and prevent unauthorized access to the site. These procedures should be developed in conformance with governmental agencies. See IEEE P1402/D8 for detailed descriptions of the security methods that can be employed. The safety and security program should be monitored continuously to ensure that it is functioning properly.

The following are suggestions for safety and security at the site:

1. Temporary or permanent fencing
2. Security guards
3. Security monitoring systems
4. Traffic control

© 2003 by CRC Press LLC

5. Warning signs
6. Construction safety procedures
7. Temporary lighting

9.4.4 Site Housekeeping

During construction, debris and refuse should not be allowed to accumulate. Efforts should be made to properly store, remove, and prevent these materials from migrating beyond the construction site. Burning of refuse should be avoided. In many areas this activity is prohibited by law. Portable toilets that are routinely serviced should be provided.

9.4.5 Hazardous Material

The spillage of transformer and pipe cable insulating oils, paints, solvents, acids, fuels, and other similar materials can be detrimental to the environment as well as a disturbance to the neighborhood. Proper care should be taken in the storage and handling of such materials during construction.

9.5 Operations

9.5.1 Site Housekeeping

Water and sediment control: Routine inspection of control for water flows is important to maintain proper sediment control measures. Inspection should be made for basin failure and for gullies in all slopes. Inspection of all control measures is necessary to be sure that problems are corrected as they develop and should be made a part of regular substation inspection and maintenance.

Yard surface maintenance: Yard surfacing should be maintained as designed to prevent water runoffs and control dust. If unwanted vegetation is observed on the substation site, approved herbicides may be used with caution to prevent runoff from damaging surrounding vegetation. If runoffs occur, the affected area should be covered with stone to retard water runoff and to control dust.

Paint: When material surfaces are protected by paint, a regular inspection and repainting should be performed to maintain a neat appearance and to prevent corrosion damage.

Landscaping: Landscaping should be maintained to ensure perpetuation of design integrity and intent.

Storage: In some areas, zoning will not permit storage in substations. The local zoning must therefore be reviewed before storing equipment, supplies, etc. The appearance of the substation site should be considered so it will not become visually offensive to the surrounding community.

Noise: Inspection of all attributes of equipment designed to limit noise should be performed periodically.

Safety and security: All substations should be inspected regularly, following established and written procedures to ensure the safety and security of the station. Safe and secure operation of the substation requires adequate knowledge and proper use of each company's accident prevention manual. See IEEE P1402/D8 for detailed descriptions of the security methods that can be employed.

Routine inspections of the substation should be performed and recorded, and may include the following:

1. Fences
2. Gates
3. Padlocks
4. Signs
5. Access detection systems
6. Alarm systems
7. Lighting systems

© 2003 by CRC Press LLC

8. Grounding systems
9. Fire-protection equipment
10. All oil-filled equipment
11. Spill-containment systems

9.5.2 Fire Protection

Refer to IEEE Std. 979-1994 for detailed guidance and identification of accepted substation fire-protection practices and applicable industry standards. Any fire-protection prevention system installed in the substation should be properly maintained.

9.5.3 Hazardous Material

A spill-prevention control and countermeasures plan should be in place for the substation site and should meet governmental requirements. For general guidance, see IEEE Std. 980-1994.

9.6 Defining Terms (IEEE, 1998)

A-weighted sound level: The representation of the sound pressure level that has as much as 40 dB of the sound below 100 Hz and a similar amount above 10,000 Hz filtered out. This level best approximates the response of the average young ear when listening to most ordinary, everyday sounds. Generally designated as dBA.

Commercial zone: A zone that includes offices, shops, hotels, motels, service establishments, or other retail/commercial facilities as defined by local ordinances.

Hazardous material: Any material that has been so designated by governmental agencies or adversely impacts human health or the environment.

Industrial zone: A zone that includes manufacturing plants where fabrication or original manufacturing is done, as defined by local ordinances.

Noise: Undesirable sound emissions or undesirable electromagnetic signals/emissions.

Residential zone: A zone that includes single-family and multifamily residential units, as defined by local ordinances.

Wetlands: Any land that has been so designated by governmental agencies. Characteristically, such land contains vegetation associated with saturated types of soil.

For additional definitions, see IEEE Std. 100-1996.

References

Guide for Electric Power Substation Physical and Electronic Security, IEEE P1402/D8, draft dated April 1997.[2]

IEEE Guide for the Design, Construction, and Operation of Electric Power Substations for Community Acceptance and Environmental Compatibility, IEEE Std. 1127-1998.

IEEE Guide for Safety in AC Substation Grounding, IEEE Std. 80-1991.

IEEE Guide to Specifications for Gas-Insulated, Electric Power Substation Equipment, IEEE Std C37.123-1996.

IEEE Guide for Substation Fire Protection, IEEE Std. 979-1994.

The IEEE Standard Dictionary of Electrical and Electronics Terms, IEEE Std. 100-1996.

IEEE Standard Procedures for Measurement of Power Frequency Electric and Magnetic Fields from AC Power Lines, IEEE Std. 644-1994.

National Electrical Safety Code® (NESC®) (ANSI), Accredited Standards Committee C2-1997, Institute of Electrical Electronics Engineers, Piscataway, NJ, 1997.

[2]This IEEE standards project was not approved by the IEEE Standards Board at the time this publication went to press. For information about obtaining a draft, contact the IEEE.

© 2003 by CRC Press LLC

10

Animal Deterrents/Security

C.M. Mike Stine
Tyco Electronics-Energy Division

Sheila Frasier
Southern Engineering

10.1 Animal Types **10**-2
Clearance Requirements • Squirrels • Birds • Snakes • Raccoons

10.2 Mitigation Methods **10**-3
Barriers • Deterrents • Insulation • Isolation Devices

The vast majority of electrical utility substations designed to transform transmission voltages to distribution class voltages employ an open-air design. The configurations may vary, but usually consist of equipment that utilizes polymer or porcelain insulators or bushings to create electrically insulated creepage and dry arc distances between the potential voltage carried by the bus or conductor and the grounded portions of the equipment or structure. Although these insulators or bushings provide the proper insulation distance for normal operation voltages (AC, DC, and BIL), they do not provide sufficient distances to eliminate bridging of many animals from potential to ground. This animal bridging situation usually exists at the low side or distribution voltage portion of the substation (12 through 36 kV), but depending on the size and type of the animal, can also affect higher voltage equipment. Utilities have reported that animal-caused outages have become a major problem affecting the reliability and continuity of the electrical system and are actively taking steps to prevent it.

The effects of animal bridging ranges from nuisance trips of the electrical system which may be a momentary occurrence, to faults that may interrupt power for long periods of time. Aside from the inconvenience and reliability aspects of animal-induced outages, there can be damage to the substation equipment ranging from porcelain bushings and insulators that may cost as little as $20.00, to complete destruction of large transformers running into the millions of dollars. There can also be an environmental risk involved with catastrophic failure such as oil spillage from equipment that has ruptured due to electrical faults.

Damage from outages is not limited to the equipment owned by the electrical utility. Many heavy industrial plants such as pulp and paper, petrochemical, and car manufacturers employ processes that are sensitive to interruptions and may result in significant time and money to reestablish production. The proliferation of computers, programmable logic controllers (PLCs), and other electrically sensitive devices in the workplace is also a reliability concern.

In addition to the concern for protecting assets such as substation equipment, improving the reliability of the system, eliminating environmental risks, and ensuring customer satisfaction and loyalty, the conservation of endangered and protected animal species is an issue. It is important to be educated and informed about the species and types of animals that are protected in each individual area or location.

0-8493-1703-7/03/$0.00+$1.50
© 2003 by CRC Press LLC

© 2003 by CRC Press LLC

To evaluate the problem and its possible solutions, several aspects need to be investigated:

- Animal type, size, and tendencies
- Equipment voltage rating and clearance from electrical ground
- Natural surroundings
- Method animals enter substation
- Influences attracting the animals
- Barrier methods available to keep the animal out
- Deterrent methods to repel the animals
- Insulation options

10.1 Animal Types

10.1.1 Clearance Requirements

The following table has been developed to aid in establishing minimum phase-to-ground and phase-to-phase clearances for the associated animals. This table is for reference only.

TABLE 10.1 Typical Clearance Requirement by Animal

Animal Type	Phase-to-Phase	Phase-to-Ground
Squirrel	18″ (450 mm)	18″ (450 mm)
Opossum/Raccoon	30″ (750 mm)	30″ (750 mm)
Snake	36″ (900 mm)	36″ (900 mm)
Crow/Grackle	24″ (600 mm)	18″ (450 mm)
Migratory Large Bird	36″ (900 mm)	36″ (900 mm)
Frog	18″ (450 mm)	18″ (450 mm)
Cat	24″ (600 mm)	24″ (600 mm)

10.1.2 Squirrels

In North America, a common culprit causing bridging is the squirrel. Although there are many varieties of squirrels, it can be assumed that the nominal length of a squirrel is 18″ (450 mm). Using this dimension, you can evaluate equipment and clearances to determine areas where bridging could occur between potential and ground or phase-to-phase. Clearances for modern substation equipment rated 35 kV and above will normally be sufficient to eliminate squirrel-caused problems; however, distances between phases and between phase and grounded structures should be examined.

There are several schools of thought regarding the reason squirrels often enter substations. One explanation offered is the proximity of trees and vegetation near the substation site that may attract squirrels. Some utilities report that removal of this vegetation had no effect on the squirrel-caused outages. Experts have theorized that the animals' path is predetermined and the construction of a structure will not deter a squirrel from following his intended route. Others believe that the animals are attracted by heat or vibration emitted from the electrical equipment. Regardless of the reason, squirrels are compelled toward intrusion.

The entry into the substation does not always occur over, under, or through the outer fence of the site. Squirrels are very adept at traveling along overhead conductors and often enter the substation in this manner. Because of this fact, perimeter barriers are often ineffectual in preventing squirrel entry.

10.1.3 Birds

Birds create several problems when entering an electrical substation. The first and most obvious is the bridging between phase-to-ground or phase-to-phase caused by the wingspan when flying into or exiting the structure. Another problem is the bridging caused by debris used to build nests. Many times material

© 2003 by CRC Press LLC

such as strands of conductors or magnetic recording tape may be readily available from the surrounding area and be utilized by the birds. This conductive debris is often dragged across the conductor/busbar and results in flashovers, trips, or faults. The third problem is contamination of insulators caused by regurgitation or defecation of the birds. When this residue is allowed to remain, it can result in flashovers from potential to ground across the surface of the porcelain or polymer insulator by essentially decreasing the insulated creepage distance. The fourth possibility is commonly known as a "streamer outage." Streamers are formed when a bird defecates upon exiting a nest that has been built above an insulator. The streamers may create a path between the structure and conductor/bus, resulting in a flashover. Birds will tend to make nests in substations in an effort to eliminate possible predators from attacking the nest for food. The construction of nests in substations can, in turn, attract other animals such as snakes, cats, and raccoons into the area searching for food.

10.1.4 Snakes

Snakes are a major contributor to substation outages. In some areas, snakes are responsible for virtually all substation wildlife outages. Because of their size and climbing ability, snakes can reach most parts of a substation without difficulty. Snake-proofing substations can sometimes create problems rather than solving them. Snakes typically enter substations hunting birds and eggs. Eliminating these predators can lead to an increase in the bird population inside the substation boundaries. This bird infestation can then lead to bird-induced problems unless additional measures are taken.

10.1.5 Raccoons

Raccoons are excellent climbers and can easily gain access to substations. Unlike snakes, raccoons will occasionally enter substations for no particular reason except curiosity. Because of their large size, raccoons can easily bridge phase-to-phase and phase-to-ground distances on equipment with voltage ratings up to 25 kV.

10.2 Mitigation Methods

10.2.1 Barriers

Some of the barrier methods available include cyclone fences, small mesh wire fences, smooth climbing guards, electric fences, solid wall barriers, and fences with unconventional geometries. Barrier methods can be very effective against certain animals. Some utilities report that the use of small mesh fencing along the lower 3–4 feet (1–1.3 meters) of the perimeter has prevented intrusion of certain types of snakes. Several substation owners have incorporated the use of a bare wire attached to a PVC pipe energized with a low voltage transformer creating an electric fence that surrounds the structure inside of the normal property fence. This method has also been proven effective for snakes. Although these barrier designs prevent snakes from entering substations, they do little or nothing to eliminate legged animal intrusions. Smooth climbing guards are also used on structures to prevent some animals from scaling the vertical framework. While these guards work for some legged animals such as dogs and foxes, more agile animals such as squirrels, opossums, and cats can easily circumnavigate the devices.

10.2.2 Deterrents

There are a myriad of commercially available deterrent devices on the market. Many of the devices have actually come from applications in the household market to repel pests such as squirrels and pigeons from property. Although numerous, most devices have a limited effect on wildlife. Some of these include ultrasonic devices, devices producing loud noises at intermittent periods, chemical repellents, sticky gels, predator urine, plastic owls or snakes, poisons, and spined perching deterrents for birds. Ultrasonic devices tend to have an initial impact on animals, but have reportedly become ineffective after a relatively

© 2003 by CRC Press LLC

short period of time either due to the animal adapting to the sounds or the need to maintain the devices. Loud noise devices, like ultrasonics, soon lose the ability to repel the animals as they become familiar with the sound and lack of consequence. Chemical repellents, sticky gels, and predator urine have been shown effective against some animals when reapplied at frequent intervals. Poisons have been used to curb infestations of pests such as pigeons, but will sometimes result in collateral effects on pets and other animals if the pest is allowed to die outside of the substation boundaries. Spined perching deterrents have proven very successful in preventing smaller birds from building nests or congregating above electrically sensitive areas, but can sometimes serve as a functional anchor for greater sized birds to secure large nests.

10.2.3 Insulation

Insulating live conductors and hardware can be very effective in eliminating animal outages. Insulation systems are available in several forms:

- Spray-on RTV coatings
- Insulating tapes
- Heat-shrinkable tubings, tapes, and sheet materials
- Pre-formed insulating covers

Insulation systems should be used at locations where animals can possibly make contact phase-to-ground or phase-to-phase. Typical applications include:

- Equipment bushing hardware (i.e., circuit breakers, reclosers, transformers, potential transformer, capacitors, regulators, etc.)
- Bus support insulator connections to structure or bus
- Hook switch insulator connections to switch base or bus
- Any area where clearance between bus and grounded equipment or structure is insufficient to eliminate bridging
- Busbar and conductors where phase-to-phase spacing is inadequate

Because these products are used as insulation on bus, conductor, or hardware, it is critical that they be of a material that is designed for the rigors of the high voltage environment. Unlike barriers and deterrents, the insulating materials are subjected to the electric field and are sometimes applied to the leakage path of other insulating materials such as porcelain. Care should be taken to select products that will withstand the outdoor environment as well as the electrical stress to which they may be subjected.

10.2.4 Isolation Devices

Isolation devices are rigid insulating discs that are installed in the leakage path of porcelain insulators. These devices force animals to climb onto them, isolating them from the ground. These discs are used on both support insulators as well as switch insulators. As with insulating covers, the insulating material must be designed for the outdoor high voltage environment.

© 2003 by CRC Press LLC

11

Substation Grounding

11.1 Reasons for Substation Grounding System **11**-1
11.2 Accidental Ground Circuit **11**-2
Conditions • Permissible Body Current Limits • Importance of High-Speed Fault Clearing • Tolerable Voltages
11.3 Design Criteria **11**-8
Actual Touch and Step Voltages • Soil Resistivity • Grid Resistance • Grid Current • Use of the Design Equations • Selection of Conductors • Selection of Connections • Grounding of Substation Fence • Other Design Considerations
References **11**-17

Richard P. Keil
Commonwealth Associates, Inc.

11.1 Reasons for Substation Grounding System

The substation grounding system is an essential part of the overall electrical system. The proper grounding of a substation is important for the following two reasons:

1. It provides a means of dissipating electric current into the earth without exceeding the operating limits of the equipment
2. It provides a safe environment to protect personnel in the vicinity of grounded facilities from the dangers of electric shock under fault conditions

The grounding system includes all of the interconnected grounding facilities in the substation area, including the ground grid, overhead ground wires, neutral conductors, underground cables, foundations, deep well, etc. The ground grid consists of horizontal interconnected bare conductors (mat) and ground rods. The design of the ground grid to control voltage levels to safe values should consider the total grounding system to provide a safe system at an economical cost.

The following information is mainly concerned with personnel safety. The information regarding the grounding system resistance, grid current, and ground potential rise can also be used to determine if the operating limits of the equipment will be exceeded.

Safe grounding requires the interaction of two grounding systems:

1. The intentional ground, consisting of grounding systems buried at some depth below the earth's surface
2. The accidental ground, temporarily established by a person exposed to a potential gradient in the vicinity of a grounded facility

It is often assumed that any grounded object can be safely touched. A low substation ground resistance is not, in itself, a guarantee of safety. There is no simple relation between the resistance of the grounding system as a whole and the maximum shock current to which a person might be exposed. A substation with relatively low ground resistance might be dangerous, while another substation with very high ground resistance might be safe or could be made safe by careful design.

0-8493-1703-7/03/$0.00+$1.50

© 2003 by CRC Press LLC

© 2003 by CRC Press LLC

There are many parameters that have an effect on the voltages in and around the substation area. Since voltages are site-dependent, it is impossible to design one grounding system that is acceptable for all locations. The grid current, fault duration, soil resistivity, surface material, and the size and shape of the grid all have a substantial effect on the voltages in and around the substation area. If the geometry, location of ground electrodes, local soil characteristics, and other factors contribute to an excessive potential gradient at the earth surface, the grounding system may be inadequate from a safety aspect despite its capacity to carry the fault current in magnitudes and durations permitted by protective relays.

During typical ground fault conditions, unless proper precautions are taken in design, the maximum potential gradients along the earth surface may be of sufficient magnitude to endanger a person in the area. Moreover, hazardous voltages may develop between grounded structures or equipment frames and the nearby earth.

The circumstances that make human electric shock accidents possible are:

- Relatively high fault current to ground in relation to the area of the grounding system and its resistance to remote earth
- Soil resistivity and distribution of ground currents such that high potential gradients may occur at points at the earth surface
- Presence of a person at such a point, time, and position that the body is bridging two points of high potential difference
- Absence of sufficient contact resistance or other series resistance to limit current through the body to a safe value under the above circumstances
- Duration of the fault and body contact and, hence, of the flow of current through a human body for a sufficient time to cause harm at the given current intensity

The relative infrequency of accidents is due largely to the low probability of coincidence of the above unfavorable conditions.

To provide a safe condition for personnel within and around the substation area, the grounding system design limits the potential difference a person can come in contact with to safe levels. IEEE Std. 80, IEEE Guide for Safety in AC Substation Grounding [1], provides general information about substation grounding and the specific design equations necessary to design a safe substation grounding system. The following discussion is a brief description of the information presented in IEEE Std. 80.

The guide's design is based on the permissible body current when a person becomes part of an accidental ground circuit. Permissible body current will not cause ventricular fibrillation, i.e., stoppage of the heart. The design methodology limits the voltages that produce the permissible body current to a safe level.

11.2 Accidental Ground Circuit

11.2.1 Conditions

There are two conditions that a person within or around the substation can experience that can cause them to become part of the ground circuit. One of these conditions, touch voltage, is illustrated in Figure 11.1 and Figure 11.2. The other condition, step voltage, is illustrated in Figure 11.3 and Figure 11.4. Figure 11.1 shows the fault current being discharged to the earth by the substation grounding system and a person touching a grounded metallic structure, H. Figure 11.2 shows the Thevenin equivalent for the person's feet in parallel, Z_{th}, in series with the body resistance, R_B. V_{th} is the voltage between terminal H and F when the person is not present. I_b is the body current. When Z_{th} is equal to the resistance of two feet in parallel, the touch voltage is

$$E_{touch} = I_b\left(R_B + Z_{th}\right) \tag{11.1}$$

© 2003 by CRC Press LLC

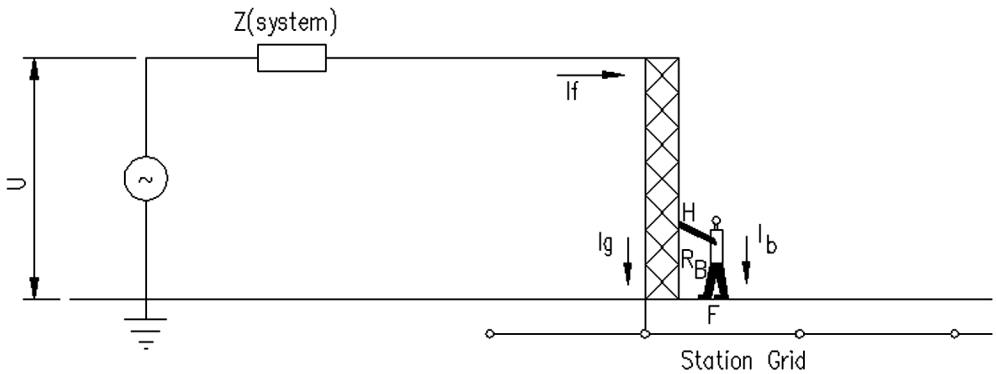

FIGURE 11.1 Exposure to touch voltage.

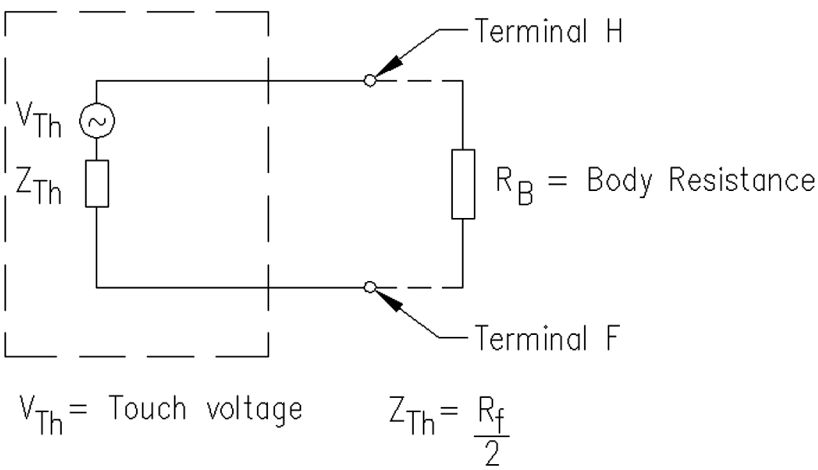

FIGURE 11.2 Touch-voltage circuit.

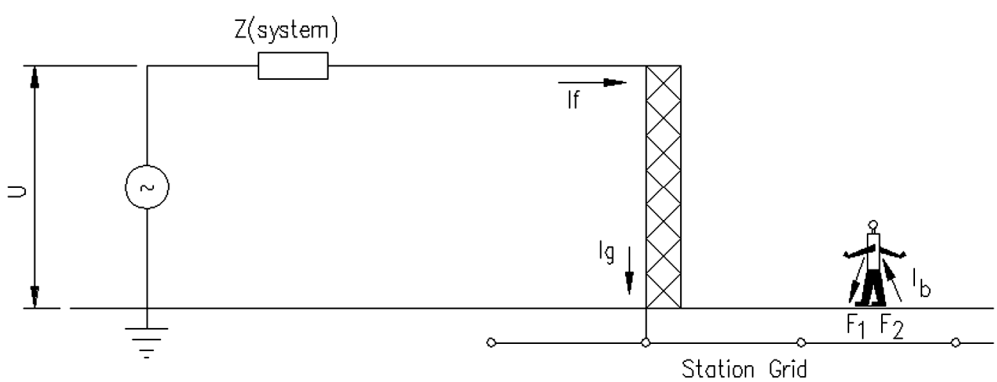

FIGURE 11.3 Exposure to step voltage.

Figure 11.3 and Figure 11.4 show the conditions for step voltage. Z_{th} is the Thevenin equivalent impedance for the person's feet in series and in series with the body. Based on the Thevenin equivalent impedance, the step voltage is

© 2003 by CRC Press LLC

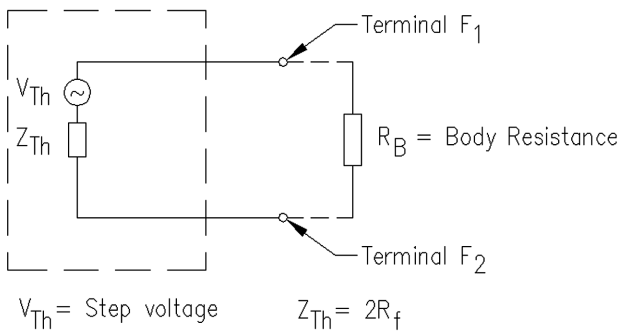

FIGURE 11.4 Step-voltage circuit.

$$E_{step} = I_b\left(R_B + Z_{th}\right) \tag{11.2}$$

The resistance of the foot in ohms is represented by a metal circular plate of radius b in meters on the surface of homogeneous earth of resistivity ρ (Ω-m) and is equal to:

$$R_f = \frac{\rho}{4b} \tag{11.3}$$

Assuming $b = 0.08$

$$R_f = 3\rho \tag{11.4}$$

The Thevenin equivalent impedance for 2 feet in parallel in the touch voltage, E_{touch}, equation is

$$Z_{Th} = \frac{R_f}{2} = 1.5\rho \tag{11.5}$$

The Thevenin equivalent impedance for 2 feet in series in the step voltage, E_{step}, equation is

$$Z_{Th} = 2R_f = 6\rho \tag{11.6}$$

The above equations assume uniform soil resistivity. In a substation, a thin layer of high-resistivity material is often spread over the earth surface to introduce a high-resistance contact between the soil and the feet, reducing the body current. The surface-layer derating factor, C_s, increases the foot resistance and depends on the relative values of the resistivity of the soil, the surface material, and the thickness of the surface material.

The following equations give the ground resistance of the foot on the surface material.

$$R_f = \left[\frac{\rho_s}{4b}\right]C_s \tag{11.7}$$

$$C_s = 1 + \frac{16b}{\rho_s}\sum_{n=1}^{\infty} K^n R_{m(2nh_s)} \tag{11.8}$$

$$K = \frac{\rho - \rho_s}{\rho + \rho_s} \tag{11.9}$$

where

C_s is the surface layer derating factor

K is the reflection factor between different material resistivities

ρ_s is the surface material resistivity in Ω–m

© 2003 by CRC Press LLC

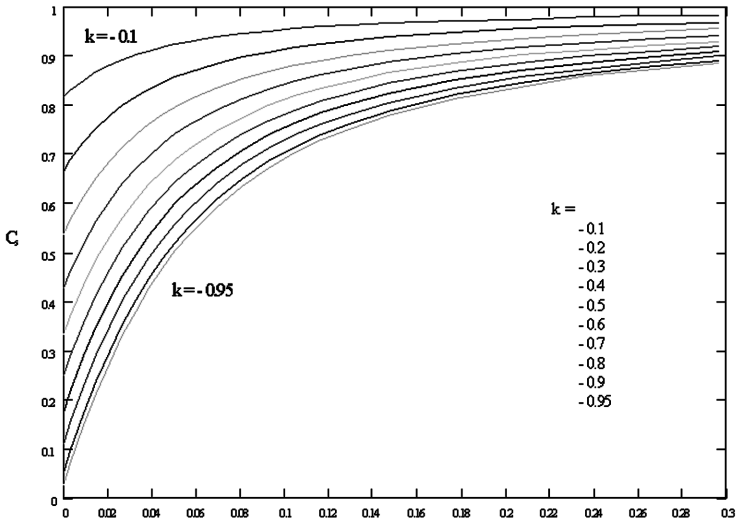

FIGURE 11.5 C_s versus h_s.

ρ	is the resistivity of the earth beneath the surface material in Ω–m
h_s	is the thickness of the surface material in m
b	is the radius of the circular metallic disc representing the foot in m
$R_m(2nh_s)$	is the mutual ground resistance between the two similar, parallel, coaxial plates, separated by a distance $(2nh_s)$, in an infinite medium of resistivity ρ_s in Ω–m

A series of C_s curves has been developed based on Equation 11.8 and $b = 0.08$ m, and is shown in Figure 11.5.

The following empirical equation by Sverak [2], and later modified, gives the value of C_s. The values of C_s obtained using Equation 11.10 are within 5% of the values obtained with the analytical method [3].

$$C_s = 1 - \frac{0.09\left(1 - \dfrac{\rho}{\rho_s}\right)}{2h_s + 0.09} \tag{11.10}$$

11.2.2 Permissible Body Current Limits

The duration, magnitude, and frequency of the current affect the human body as the current passes through it. The most dangerous impact on the body is a heart condition known as ventricular fibrillation, a stoppage of the heart resulting in immediate loss of blood circulation. Humans are very susceptible to the effects of electric currents at 50 and 60 Hz. The most common physiological effects as the current increases are perception, muscular contraction, unconsciousness, fibrillation, respiratory nerve blockage, and burning [4]. The threshold of perception, the detection of a slight tingling sensation, is generally recognized as 1 mA. The let-go current, the ability to control the muscles and release the source of current, is recognized as between 1 and 6 mA. The loss of muscular control may be caused by 9 to 25 mA, making it impossible to release the source of current. At slightly higher currents, breathing may become very difficult, caused by the muscular contractions of the chest muscles. Although very painful, these levels of current do not cause permanent damage to the body. In a range of 60 to 100 mA, ventricular fibrillation occurs. Ventricular fibrillation can be a fatal electric shock. The only way to restore the normal heartbeat is through another controlled electric shock, called defibrillation. Larger currents will inflict nerve damage and burning, causing other life-threatening conditions.

The substation grounding system design should limit the electric current flow through the body to a value below the fibrillation current. Dalziel [5] published a paper introducing an equation relating the

© 2003 by CRC Press LLC

flow of current through the body for a specific time that statistically 99.5% of the population could survive before the onset of fibrillation. This equation determines the allowable body current.

$$I_B = \frac{k}{\sqrt{t_s}} \tag{11.11}$$

where
I_B = rms magnitude of the current through the body, A
t_s = duration of the current exposure, sec
k = $\sqrt{S_B}$
S_B = empirical constant related to the electric shock energy tolerated by a certain percent of a given population

Dalziel found the value of $k = 0.116$ for persons weighing approximately 50 kg (110 lb) or $k = 0.157$ for a body weight of 70 kg (154 lb) [6]. Based on a 50-kg weight, the tolerable body current is

$$I_B = \frac{0.116}{\sqrt{t_s}} \tag{11.12}$$

The equation is based on tests limited to values of time in the range of 0.03 to 3.0 sec. It is not valid for other values of time. Other researchers have suggested other limits [7]. Their results have been similar to Dalziel's for the range of 0.03 to 3.0 sec.

11.2.3 Importance of High-Speed Fault Clearing

Considering the significance of fault duration both in terms of Equation 11.11 and implicitly as an accident-exposure factor, high-speed clearing of ground faults is advantageous for two reasons:

1. The probability of exposure to electric shock is greatly reduced by fast fault clearing time, in contrast to situations in which fault currents could persist for several minutes or possibly hours.
2. Both tests and experience show that the chance of severe injury or death is greatly reduced if the duration of a current flow through the body is very brief.

The allowed current value may therefore be based on the clearing time of primary protective devices, or that of the backup protection. A good case could be made for using the primary clearing time because of the low combined probability that relay malfunctions will coincide with all other adverse factors necessary for an accident. It is more conservative to choose the backup relay clearing times in Equation 11.11, because it assures a greater safety margin.

An additional incentive to use switching times less than 0.5 sec results from the research done by Biegelmeier and Lee [7]. Their research provides evidence that a human heart becomes increasingly susceptible to ventricular fibrillation when the time of exposure to current is approaching the heartbeat period, but that the danger is much smaller if the time of exposure to current is in the region of 0.06 to 0.3 sec.

In reality, high ground gradients from faults are usually infrequent, and shocks from this cause are even more uncommon. Furthermore, both events are often of very short duration. Thus, it would not be practical to design against shocks that are merely painful and cause no serious injury, i.e., for currents below the fibrillation threshold.

11.2.4 Tolerable Voltages

Figure 11.6 and Figure 11.7 show the five voltages a person can be exposed to in a substation. The following definitions describe the voltages.

© 2003 by CRC Press LLC

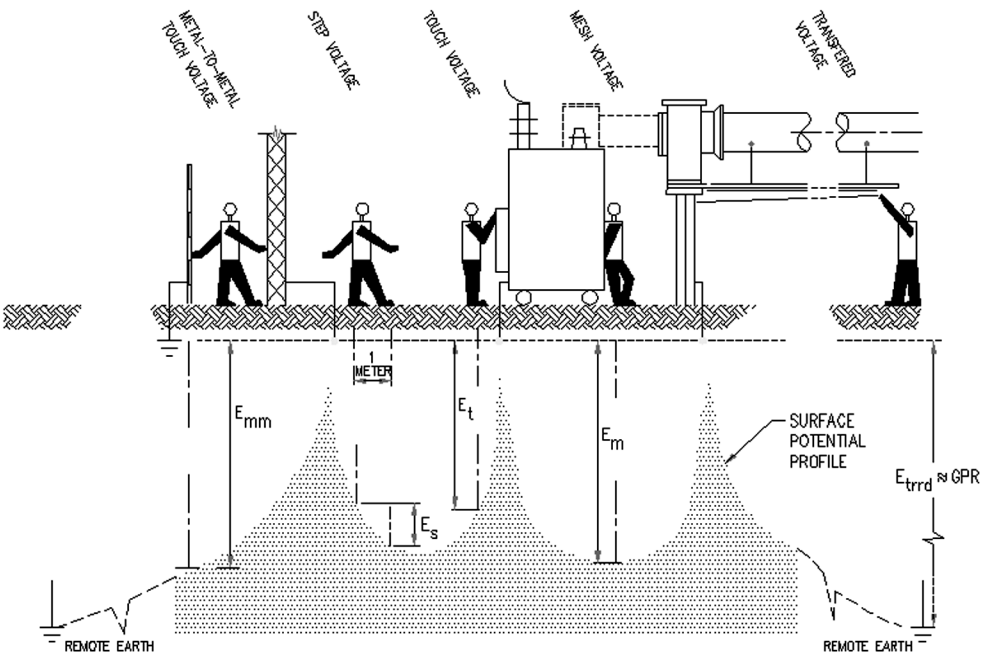

FIGURE 11.6 Basic shock situations.

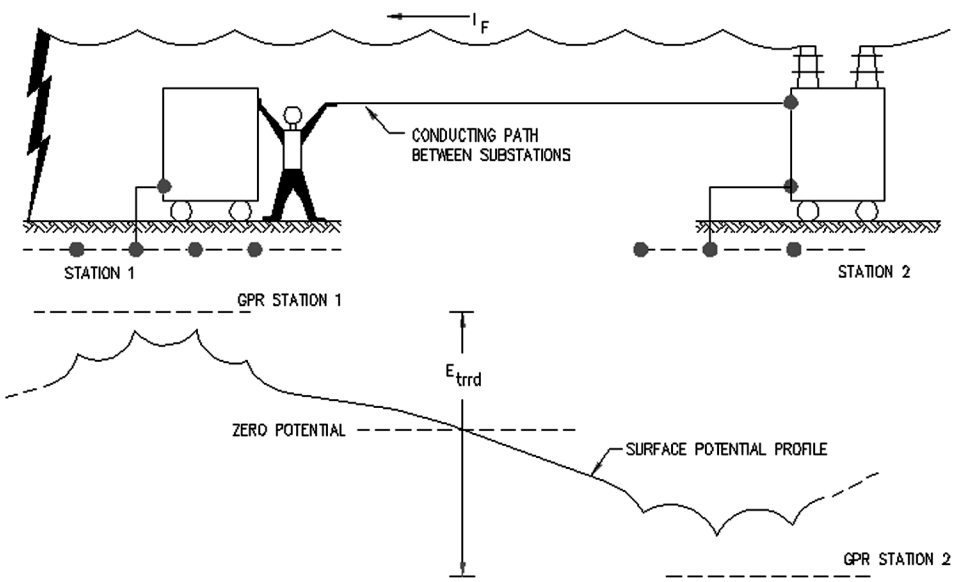

FIGURE 11.7 Typical situation of external transferred potential.

Ground potential rise (GPR): The maximum electrical potential that a substation grounding grid may attain relative to a distant grounding point assumed to be at the potential of remote earth. GPR is the product of the magnitude of the grid current, the portion of the fault current conducted to earth by the grounding system, and the ground grid resistance.

Mesh voltage: The maximum touch voltage within a mesh of a ground grid.

© 2003 by CRC Press LLC

Metal-to-metal touch voltage: The difference in potential between metallic objects or structures within the substation site that can be bridged by direct hand-to-hand or hand-to-feet contact. Note: The metal-to-metal touch voltage between metallic objects or structures bonded to the ground grid is assumed to be negligible in conventional substations. However, the metal-to-metal touch voltage between metallic objects or structures bonded to the ground grid and metallic objects inside the substation site but not bonded to the ground grid, such as an isolated fence, may be substantial. In the case of gas-insulated substations, the metal-to-metal touch voltage between metallic objects or structures bonded to the ground grid may be substantial because of internal faults or induced currents in the enclosures.

Step voltage: The difference in surface potential experienced by a person bridging a distance of 1 m with the feet without contacting any other grounded object.

Touch voltage: The potential difference between the ground potential rise (GPR) and the surface potential at the point where a person is standing while at the same time having a hand in contact with a grounded structure.

Transferred voltage: A special case of the touch voltage where a voltage is transferred into or out of the substation, from or to a remote point external to the substation site. The maximum voltage of any accidental circuit must not exceed the limit that would produce a current flow through the body that could cause fibrillation.

Assuming the more conservative body weight of 50 kg to determine the permissible body current and a body resistance of 1000 Ω, the tolerable touch voltage is

$$E_{touch50} = \left(1000 + 1.5C_s \cdot \rho_s\right)\frac{0.116}{\sqrt{t_s}} \tag{11.13}$$

and the tolerable step voltage is

$$E_{step50} = \left(1000 + 6C_s \cdot \rho_s\right)\frac{0.116}{\sqrt{t_s}} \tag{11.14}$$

where
E_{step} = step voltage, V
E_{touch} = touch voltage, V
C_s = determined from Figure 11.5 or Equation 11.10
ρ_s = resistivity of the surface material, Ω-m
t_s = duration of shock current, sec

Since the only resistance for the metal-to-metal touch voltage is the body resistance, the voltage limit is

$$E_{mm-touch50} = \frac{116}{\sqrt{t_s}} \tag{11.15}$$

The shock duration is usually assumed to be equal to the fault duration. If reclosing of a circuit is planned, the fault duration time should be the sum of the individual faults and used as the shock duration time t_s.

11.3 Design Criteria

The design criteria for a substation grounding system are to limit the actual step and mesh voltages to levels below the tolerable step and touch voltages as determined by Equations 11.13 and 11.14. The worst-case touch voltage, as shown in Figure 11.6, is the mesh voltage.

© 2003 by CRC Press LLC

11.3.1 Actual Touch and Step Voltages

The following discusses the methodology to determine the actual touch and step voltages.

11.3.1.1 Mesh Voltage (E_m)

The actual mesh voltage, E_m (maximum touch voltage), is the product of the soil resistivity, ρ; the geometrical factor based on the configuration of the grid, K_m ; a correction factor, K_i, that accounts for some of the error introduced by the assumptions made in deriving K_m; and the average current per unit of effective buried length of the conductor that makes up the grounding system (I_G/L_M).

$$E_m = \frac{\rho \cdot K_m \cdot K_i \cdot I_G}{L_M} \tag{11.16}$$

The geometrical factor K_m [2] is as follows:

$$K_m = \frac{1}{2 \cdot \pi} \cdot \left[\ln\left[\frac{D^2}{16 \cdot h \cdot d} + \frac{(D + 2 \cdot h)^2}{8 \cdot D \cdot d} - \frac{h}{4 \cdot d} \right] + \frac{K_{ii}}{K_h} \cdot \ln\left[\frac{8}{\pi(2 \cdot n - 1)} \right] \right] \tag{11.17}$$

For grids with ground rods along the perimeter, or for grids with ground rods in the grid corners, as well as both along the perimeter and throughout the grid area, $K_{ii} = 1$. For grids with no ground rods or grids with only a few ground rods, none located in the corners or on the perimeter,

$$K_{ii} = \frac{1}{(2 \cdot n)^{\frac{2}{n}}} \tag{11.18}$$

$$K_h = \sqrt{1 + \frac{h}{h_o}}\ , \ h_0 = 1 \text{ m (grid reference depth)} \tag{11.19}$$

Using four grid-shape components [8], the effective number of parallel conductors in a given grid, n, can be made applicable to both rectangular and irregularly shaped grids that represent the number of parallel conductors of an equivalent rectangular grid:

$$n = n_a \cdot n_b \cdot n_c \cdot n_d \tag{11.20}$$

where

$$n_a = \frac{2 \cdot L_C}{L_p} \tag{11.21}$$

n_b = 1 for square grids
n_c = 1 for square and rectangular grids
n_d = 1 for square, rectangular, and L-shaped grids

Otherwise,

$$n_b = \sqrt{\frac{L_p}{4 \cdot \sqrt{A}}} \tag{11.22}$$

$$n_c = \left[\frac{L_x \cdot L_y}{A} \right]^{\frac{0.7 \cdot A}{L_x \cdot L_y}} \tag{11.23}$$

© 2003 by CRC Press LLC

$$n_d = \frac{D_m}{\sqrt{L_x^2 + L_y^2}} \tag{11.24}$$

where
L_c = total length of the conductor in the horizontal grid, m
L_p = peripheral length of the grid, m
A = area of the grid, m^2
L_x = maximum length of the grid in the x direction, m
L_y = maximum length of the grid in the y direction, m
D_m = maximum distance between any two points on the grid, m
D = spacing between parallel conductors, m
h = depth of the ground grid conductors, m
d = diameter of the grid conductor, m
I_G = maximum grid current, A

The irregularity factor, K_i, used in conjunction with the above-defined n, is

$$K_i = 0.644 + 0.148 \cdot n \tag{11.25}$$

For grids with no ground rods, or grids with only a few ground rods scattered throughout the grid, but none located in the corners or along the perimeter of the grid, the effective buried length, L_M, is

$$L_M = L_C + L_R \tag{11.26}$$

where L_R = total length of all ground rods, in meters.

For grids with ground rods in the corners, as well as along the perimeter and throughout the grid, the effective buried length, L_M, is

$$L_M = L_C + \left[1.55 + 1.22\left(\frac{L_r}{\sqrt{L_x^2 + L_y^2}}\right)\right] L_R \tag{11.27}$$

where L_r = length of each ground rod, m.

11.3.1.2 Step Voltage (E_s)

The maximum step voltage is assumed to occur over a distance of 1 m, beginning at and extending outside of the perimeter conductor at the angle bisecting the most extreme corner of the grid. The step voltage values are obtained as a product of the soil resistivity (ρ), the geometrical factor K_s, the corrective factor K_i, and the average current per unit of buried length of grounding system conductor (I_G/L_S):

$$E_s = \frac{\rho \cdot K_s \cdot K_i \cdot I_G}{L_S} \tag{11.28}$$

For the usual burial depth of 0.25 m < h < 2.5 m [2], K_s is defined as

$$K_s = \frac{1}{\pi}\left[\frac{1}{2 \cdot h} + \frac{1}{D+h} + \frac{1}{D}\left(1 - 0.5^{n-2}\right)\right] \tag{11.29}$$

and K_i as defined in Equation 11.25.

For grids with or without ground rods, the effective buried conductor length, L_S, is defined as

$$L_S = 0.75 \cdot L_C + 0.85 \cdot L_R \tag{11.30}$$

© 2003 by CRC Press LLC

11.3.1.3 Evaluation of the Actual Touch- and Step-Voltage Equations

It is essential to determine the soil resistivity and maximum grid currents to design a substation grounding system. The touch and step voltages are directly proportional to these values. Overly conservative values of soil resistivity and grid current will increase the cost dramatically. Underestimating them may cause the design to be unsafe.

11.3.2 Soil Resistivity

Soil resistivity investigations are necessary to determine the soil structure. There are a number of tables in the literature showing the ranges of resistivity based on soil types (clay, loam, sand, shale, etc.) [9–11]. These tables give only very rough estimates. The soil resistivity can change dramatically with changes in moisture, temperature, and chemical content. To determine the soil resistivity of a particular site, soil resistivity measurements need to be taken. Soil resistivity can vary both horizontally and vertically, making it necessary to take more than one set of measurements. A number of measuring techniques are described in detail in IEEE Std. 81-1983, Guide for Measuring Earth Resistivity, Ground Impedance, and Earth Surface Potential of a Ground System [12]. The most widely used test for determining soil resistivity data was developed by Wenner and is called either the Wenner or four-pin method. Using four pins or electrodes driven into the earth along a straight line at equal distances of a, to a depth of b, current is passed through the outer pins while a voltage reading is taken with the two inside pins. Based on the resistance, R, as determined by the voltage and current, the apparent resistivity can be calculated using the following equation, assuming b is small compared with a:

$$\rho_a = 2\pi a R \tag{11.31}$$

where it is assumed the apparent resistivity, ρ_a, at depth a is given by the equation.

Interpretation of the apparent soil resistivity based on field measurements is difficult. Uniform and two-layer soil models are the most commonly used soil resistivity models. The objective of the soil model is to provide a good approximation of the actual soil conditions. Interpretation can be done either manually or by the use of computer analysis. There are commercially available computer programs that take the soil data and mathematically calculate the soil resistivity and give a confidence level based on the test. Sunde developed a graphical method to interpret the test results.

The equations in IEEE Std. 80 require a uniform soil resistivity. Engineering judgment is required to interpret the soil resistivity measurements to determine the value of the soil resistivity, ρ, to use in the equations. IEEE Std. 80 presents equations to calculate the apparent soil resistivity based on field measurements as well as examples of Sunde's graphical method. Although the equations and graphical method are estimates, they provide the engineer with guidelines of the uniform soil resistivity to use in the ground grid design.

11.3.3 Grid Resistance

The grid resistance, i.e., the resistance of the ground grid to remote earth without other metallic conductors connected, can be calculated based on the following Sverak [2] equation:

$$R_g = \rho\left[\frac{1}{L_T} + \frac{1}{\sqrt{20A}}\left(1 + \frac{1}{1 + h\sqrt{20/A}}\right)\right] \tag{11.32}$$

where

R_g = substation ground resistance, Ω
ρ = soil resistivity, Ω-m
A = area occupied by the ground grid, m^2
h = depth of the grid, m
L_T = total buried length of conductors, m

© 2003 by CRC Press LLC

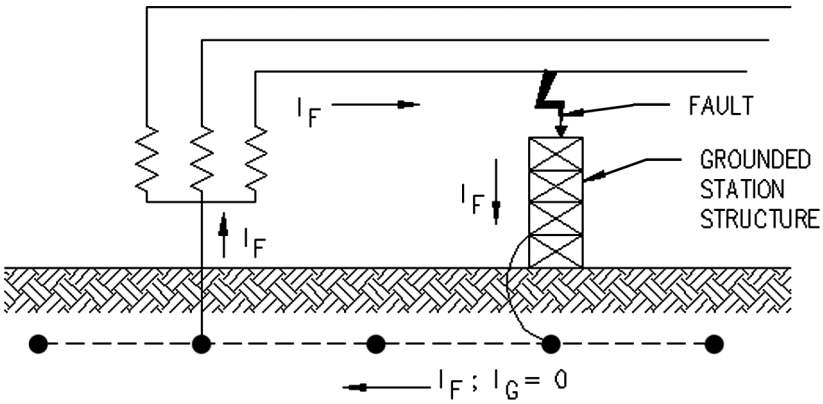

FIGURE 11.8 Fault within local substation; local neutral grounded.

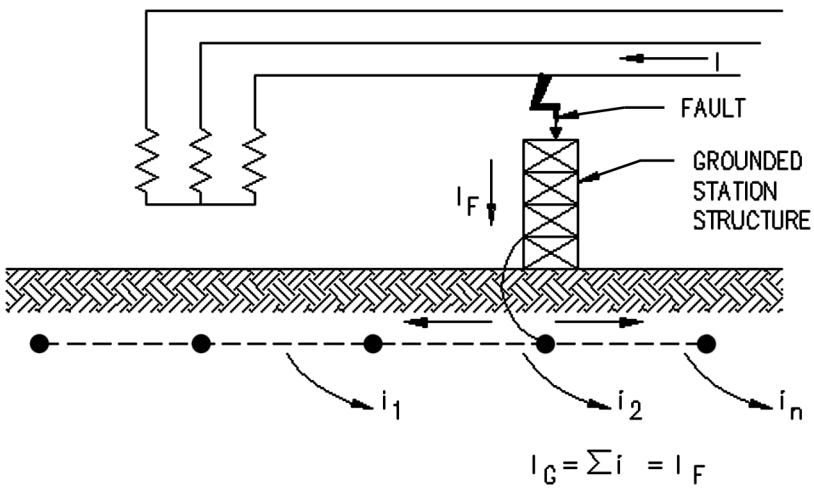

FIGURE 11.9 Fault within local substation; neutral grounded at remote location.

11.3.4 Grid Current

The maximum grid current must be determined, since it is this current that will produce the greatest ground potential rise (GPR) and the largest local surface potential gradients in and around the substation area. It is the flow of the current from the ground grid system to remote earth that determines the GPR.

There are many types of faults that can occur on an electrical system. Therefore, it is difficult to determine what condition will produce the maximum fault current. In practice, single-line-to-ground and line-to-line-to-ground faults will produce the maximum grid current. Figure 11.8 through Figure 11.11 show the maximum grid current, I_G, for various fault locations and system configurations.

Overhead ground wires, neutral conductors, and directly buried pipes and cables conduct a portion of the ground fault current away from the substation ground grid and need to be considered when determining the maximum grid current. The effect of these other current paths in parallel with the ground grid is difficult to determine because of the complexities and uncertainties in the current flow. Computer programs are available to determine the split between the various current paths. There are many papers available to determine the effective impedance of a static wire as seen from the fault point.

© 2003 by CRC Press LLC

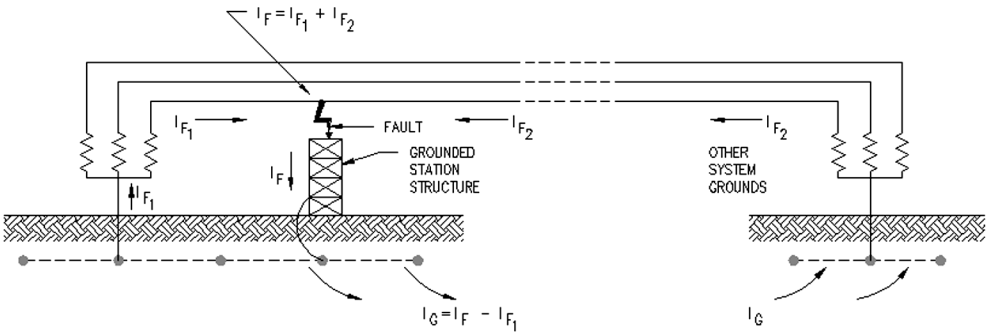

FIGURE 11.10 Fault in substation; system grounded at local station and also at other points.

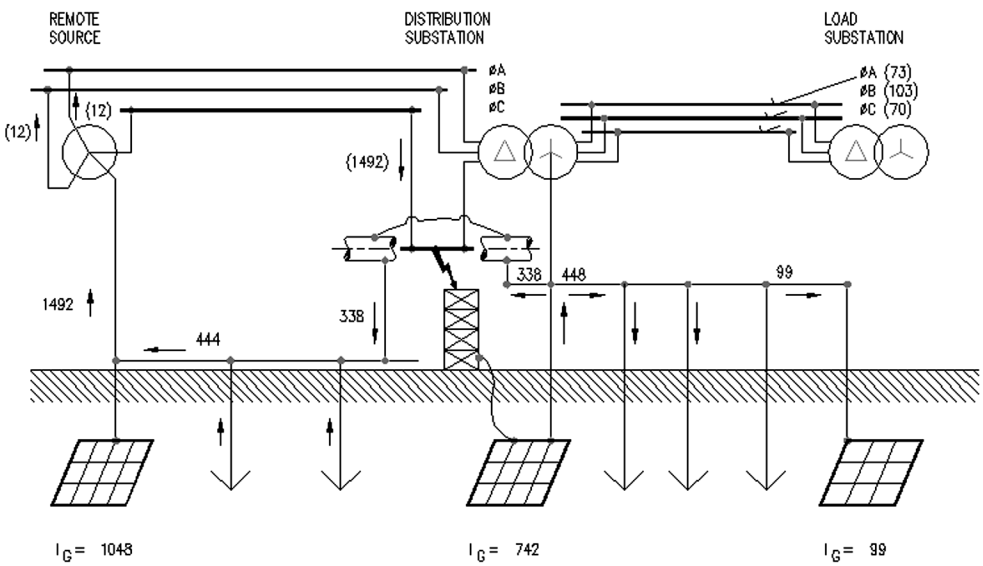

FIGURE 11.11 Typical current division for a fault on high side of distribution substation.

The fault current division factor, or split factor, represents the inverse of a ratio of the symmetrical fault current to that portion of the current that flows between the grounding grid and the surrounding earth.

$$S_f = \frac{I_g}{3I_o} \tag{11.33}$$

where
S_f = fault current division factor
I_g = rms symmetrical grid current, A
I_0 = zero-sequence fault current, A

The process of computing the split factor, S_f, consists of deriving an equivalent representation of the overhead ground wires, neutrals, etc., connected to the grid and then solving the equivalent to determine what fraction of the total fault current flows between the grid and earth, and what fraction flows through the ground wires or neutrals. S_f is dependent on many parameters, some of which are:

© 2003 by CRC Press LLC

1. Location of the fault
2. Magnitude of substation ground grid resistance
3. Buried pipes and cables in the vicinity of or directly connected to the substation ground system
4. Overhead ground wires, neutrals, or other ground return paths

Because of S_f, the symmetrical grid current I_g and maximum grid current I_G are closely related to the location of the fault. If the additional ground paths of items 3 and 4 above are neglected, the current division ratio (based on remote vs. local current contributions) can be computed using traditional symmetrical components. However, the current I_g computed using such a method may be overly pessimistic, even if the future system expansion is taken into consideration.

IEEE Std. 80 presents a series of curves based on computer simulations for various values of ground grid resistance and system conditions to determine the grid current. These split-current curves can be used to determine the maximum grid current. Using the maximum grid current instead of the maximum fault current will reduce the overall cost of the ground grid system.

11.3.5 Use of the Design Equations

The design equations above are limited to a uniform soil resistivity, equal grid spacing, specific buried depths, and relatively simple geometric layouts of the grid system. It may be necessary to use more sophisticated computer techniques to design a substation ground grid system for nonuniform soils or complex geometric layouts. Commercially available computer programs can be used to optimize the layout and provide for unequal grid spacing and maximum grid current based on the actual system configuration, including overhead wires, neutral conductors, underground facilities, etc. Computer programs can also handle special problems associated with fences, interconnected substation grounding systems at power plants, customer substations, and other unique situations.

11.3.6 Selection of Conductors

11.3.6.1 Materials

Each element of the grounding system, including grid conductors, connections, connecting leads, and all primary electrodes, should be designed so that for the expected design life of the installation, the element will:

- Have sufficient conductivity, so that it will not contribute substantially to local voltage differences
- Resist fusing and mechanical deterioration under the most adverse combination of a fault current magnitude and duration
- Be mechanically reliable and rugged to a high degree
- Be able to maintain its function even when exposed to corrosion or physical abuse

Copper is a common material used for grounding. Copper conductors, in addition to their high conductivity, have the advantage of being resistant to most underground corrosion because copper is cathodic with respect to most other metals that are likely to be buried in the vicinity. Copper-clad steel is usually used for underground rods and occasionally for grid conductors, especially where theft is a problem. Use of copper, or to a lesser degree copper-clad steel, therefore assures that the integrity of an underground network will be maintained for years, so long as the conductors are of an adequate size and not damaged and the soil conditions are not corrosive to the material used. Aluminum is used for ground grids less frequently. Though at first glance the use of aluminum would be a natural choice for GIS equipment with enclosures made of aluminum or aluminum alloys, there are several disadvantages to consider:

- Aluminum can corrode in certain soils. The layer of corroded aluminum material is nonconductive for all practical grounding purposes.
- Gradual corrosion caused by alternating currents can also be a problem under certain conditions.

© 2003 by CRC Press LLC

Thus, aluminum should be used only after full investigation of all circumstances, despite the fact that, like steel, it would alleviate the problem of contributing to the corrosion of other buried objects. However, it is anodic to many other metals, including steel and, if interconnected to one of these metals in the presence of an electrolyte, the aluminum will sacrifice itself to protect the other metal. If aluminum is used, the high-purity electric-conductor grades are recommended as being more suitable than most alloys. Steel can be used for ground grid conductors and rods. Of course, such a design requires that attention be paid to the corrosion of the steel. Use of a galvanized or corrosion-resistant steel, in combination with cathodic protection, is typical for steel grounding systems.

A grid of copper or copper-clad steel forms a galvanic cell with buried steel structures, pipes, and any of the lead-based alloys that might be present in cable sheaths. This galvanic cell can hasten corrosion of the latter. Tinning the copper has been tried by some utilities because tinning reduces the cell potential with respect to steel and zinc by about 50% and practically eliminates this potential with respect to lead (tin being slightly sacrificial to lead). The disadvantage of using tinned copper conductor is that it accelerates and concentrates the natural corrosion, caused by the chemicals in the soil, of the copper in any small bare area. Other often-used methods are:

- Insulation of the sacrificial metal surfaces with a coating such as plastic tape, asphalt compound, or both.
- Routing of buried metal elements so that any copper-based conductor will cross water pipe lines or similar objects made of other uncoated metals as nearly as possible at right angles, and then applying an insulated coating to one metal or the other where they are in proximity. The insulated coating is usually applied to the pipe.
- Cathodic protection using sacrificial anodes or impressed current systems.
- Use of nonmetallic pipes and conduit.

11.3.6.2 Conductor Sizing Factors

Conductor sizing factors include the symmetrical currents, asymmetrical currents, limitation of temperatures to values that will not cause harm to other equipment, mechanical reliability, exposure to corrosive environments, and future growth causing higher grounding-system currents. The following provides information concerning symmetrical and asymmetrical currents.

11.3.6.3 Symmetrical Currents

The short-time temperature rise in a ground conductor, or the required conductor size as a function of conductor current, can be obtained from Equations 11.34 and 11.35, which are taken from the derivation by Sverak [13]. These equations evaluate the ampacity of any conductor for which the material constants are known. Equations 11.34 and 11.35 are derived for symmetrical currents (with no dc offset).

$$I = A_{mm^2}\sqrt{\left(\frac{TCAP\cdot 10^{-4}}{t_c\alpha_r\rho_r}\right)\ln\left(\frac{K_o+T_m}{K_o+T_a}\right)} \tag{11.34}$$

where

I = rms current, kA
A_{mm^2} = conductor cross section, mm^2
T_m = maximum allowable temperature, °C
T_a = ambient temperature, °C
T_r = reference temperature for material constants, °C
α_0 = thermal coefficient of resistivity at 0°C, 1/°C
α_r = thermal coefficient of resistivity at reference temperature T_r, 1/°C
ρ_r = resistivity of the ground conductor at reference temperature T_r, μΩ-cm
K_0 = $1/\alpha_0$ or $(1/\alpha_r) - T_r$, °C
t_c = duration of current, sec
TCAP = thermal capacity per unit volume, J/(cm^3·°C)

© 2003 by CRC Press LLC

Note that α_r and ρ_r are both to be found at the same reference temperature of T_r degrees Celsius. If the conductor size is given in kcmils ($mm^2 \times 1.974$ = kcmils), Equation 11.34 becomes

$$I = 5.07 \cdot 10^{-3} A_{kcmil} \sqrt{\left(\frac{TCAP}{t_c \alpha_r \rho_r}\right) \ln\left(\frac{K_o + T_m}{K_o + T_a}\right)} \tag{11.35}$$

11.3.6.4 Asymmetrical Currents: Decrement Factor

In cases where accounting for a possible dc offset component in the fault current is desired, an equivalent value of the symmetrical current, I_F, representing the rms value of an asymmetrical current integrated over the entire fault duration, t_c, can be determined as a function of X/R by using the decrement factor D_f, Equation 11.35, prior to the application of Equation 11.34 and Equation 11.35.

$$I_F = I_f \cdot D_f \tag{11.36}$$

$$D_f = \sqrt{1 + \frac{T_a}{t_f}\left(1 - e^{\frac{-2t_f}{T_a}}\right)} \tag{11.37}$$

The resulting value of I_F is always larger than I_f because the decrement factor is based on a very conservative assumption that the ac component does not decay with time but remains constant at its initial subtransient value.

The decrement factor is dependent on both the system X/R ratio at the fault location for a given fault type and the duration of the fault. The decrement factor is larger for higher X/R ratios and shorter fault durations. The effects of the dc offset are negligible if the X/R ratio is less than five and the duration of the fault is greater than 1 sec.

11.3.7 Selection of Connections

All connections made in a grounding network above and below ground should be evaluated to meet the same general requirements of the conductor used, namely electrical conductivity, corrosion resistance, current-carrying capacity, and mechanical strength. These connections should be massive enough to maintain a temperature rise below that of the conductor and to withstand the effect of heating, be strong enough to withstand the mechanical forces caused by the electromagnetic forces of maximum expected fault currents, and be able to resist corrosion for the intended life of the installation.

IEEE Std. 837, Qualifying Permanent Connections Used in Substation Grounding [14], provides detailed information on the application and testing of permanent connections for use in substation grounding. Grounding connections that pass IEEE Std. 837 for a particular conductor size range and material should satisfy all the criteria outlined above for that same conductor size, range, and material.

11.3.8 Grounding of Substation Fence

Fence grounding is of major importance, since the fence is usually accessible to the general public, children and adults. The substation grounding system design should be such that the touch potential on the fence is within the calculated tolerable limit of touch potential. Step potential is usually not a concern at the fence perimeter, but this should be checked to verify that a problem does not exist. There are various ways to ground the substation fence. The fence can be within and attached to the ground grid, outside and attached to the ground grid, outside and not attached to the ground grid, or separately grounded such as through the fence post. IEEE Std. 80 provides a very detailed analysis of the different grounding situations. There are many safety considerations associated with the different fence-grounding options.

© 2003 by CRC Press LLC

11.3.9 Other Design Considerations

There are other elements of substation grounding system design that have not been discussed here. These elements include the refinement of the design, effects of directly buried pipes and cables, special areas of concern including control- and power-cable grounding, surge arrester grounding, transferred potentials, and installation considerations.

References

1. Institute of Electrical and Electronics Engineers, IEEE Guide for Safety in AC Substation Grounding, IEEE Std. 80-2000, IEEE, Piscataway, NJ, 2000.
2. Sverak, J.G., Simplified analysis of electrical gradients above a ground grid: part I — how good is the present IEEE method? *IEEE Trans. Power Appar. Systems*, 103, 7–25, 1984.
3. Thapar, B., Gerez, V., and Kejriwal, H., Reduction factor for the ground resistance of the foot in substation yards, *IEEE Trans. Power Delivery*, 9, 360–368, 1994.
4. Dalziel, C.F. and Lee, W.R., Lethal electric currents, *IEEE Spectrum*, 44–50, Feb. 1969.
5. Dalziel, C.F., Threshold 60-cycle fibrillating currents, *AIEE Trans. Power Appar. Syst.*, 79, 667–673, 1960.
6. Dalziel, C.F. and Lee, R.W., Reevaluation of lethal electric currents, *IEEE Trans. Ind. Gen. Applic.,* 4, 467–476, 1968.
7. Biegelmeier, U.G. and Lee, W.R., New considerations on the threshold of ventricular fibrillation for AC shocks at 50–60 Hz, *Proc. IEEE*, 127, 103–110, 1980.
8. Thapar, B., Gerez, V., Balakrishnan, A., and Blank, D., Simplified equations for mesh and step voltages in an AC substation, *IEEE Trans. Power Delivery*, 6, 601–607, 1991.
9. Rüdenberg, R., Basic considerations concerning systems, *Electrotechnische Zeitschrift*, 11 and 12, 1926.
10. Sunde, E.D., *Earth Conduction Effects in Transmission Systems*, Macmillan, New York, 1968.
11. Wenner, F., A method of measuring earth resistances, Rep. 258, *Bull. Bur. Stand.*, 12, 469–482, 1916.
12. Institute of Electrical and Electronics Engineers, IEEE Guide for Measuring Earth Resistivity, Ground Impedance, and Earth Surface Potentials of a Ground System, IEEE Std. 81-1983, IEEE, Piscataway, NJ, 1983.
13. Sverak, J.G., Sizing of ground conductors against fusing, *IEEE Trans. Power Appar. Syst.*, 100, 51–59, 1981.
14. Institute of Electrical and Electronics Engineers, IEEE Standard for Qualifying Permanent Connections Used in Substation Grounding, IEEE Std. 837-1989 (reaffirmed 1996), IEEE, Piscataway, NJ, 1996.

© 2003 by CRC Press LLC

12

Grounding and Lightning[1]

12.1 Lightning Stroke Protection 12-1
The Design Problem
12.2 Lightning Parameters 12-2
Strike Distance • Stroke Current Magnitude • Keraunic Level • Ground Flash Density • Lightning Detection Networks
12.3 Empirical Design Methods 12-5
Fixed Angles • Empirical Curves
12.4 The Electrogeometric Model (EGM) 12-7
Whitehead's EGM • Recent Improvements in the EGM • Criticism of the EGM • A Revised EGM • Application of the EGM by the Rolling Sphere Method • Multiple Shielding Electrodes • Changes in Voltage Level • Minimum Stroke Current • Application of Revised EGM by Mousa and Srivastava Method
12.5 Calculation of Failure Probability 12-18
12.6 Active Lightning Terminals 12-20
References 12-20

Robert S. Nowell
Georgia Power Company

12.1 Lightning Stroke Protection

Substation design involves more than installing apparatus, protective devices, and equipment. The significant monetary investment and required reliable continuous operation of the facility requires detailed attention to preventing surges (transients) from entering the substation facility. These surges can be switching surges, lightning surges on connected transmission lines, or direct strokes to the substation facility. The origin and mechanics of these surges, including lightning, are discussed in detail in Chapter 10 of *The Electric Power Engineering Handbook* (CRC Press, 2001). This section focuses on the design process for providing *effective shielding* (that which permits lightning strokes no greater than those of critical amplitude [less design margin] to reach phase conductors [IEEE Std. 998-1996]) against direct lightning stroke in substations.

[1]A large portion of the text and all of the figures used in the following discussion were prepared by the Direct Stroke Shielding of Substations Working Group of the Substations Committee — IEEE Power Engineering Society, and published as IEEE Std. 998-1996, *IEEE Guide for Direct Lightning Stroke Shielding of Substations,* Institute of Electrical and Electronics Engineers, Inc., 1996. The IEEE disclaims any responsibility or liability resulting from the placement or use in the described manner. Information is reprinted with the permission of the IEEE. The author has been a member of the working group since 1987.

0-8493-1703-7/03/$0.00+$1.50

© 2003 by CRC Press LLC

© 2003 by CRC Press LLC

12.1.1 The Design Problem

The engineer who seeks to design a direct stroke shielding system for a substation or facility must contend with several elusive factors inherent in lightning phenomena, namely:

- The unpredictable, probabilistic nature of lightning
- The lack of data due to the infrequency of lightning strokes in substations
- The complexity and economics involved in analyzing a system in detail

There is no known method of providing 100% shielding short of enclosing the equipment in a solid metallic enclosure. The uncertainty, complexity, and cost of performing a detailed analysis of a shielding system has historically resulted in simple rules of thumb being utilized in the design of lower voltage facilities. Extra high voltage (EHV) facilities, with their critical and more costly equipment components, usually justify a more sophisticated study to establish the risk vs. cost benefit.

Because of the above factors, it is suggested that a four-step approach be utilized in the design of a protection system:

1. Evaluate the importance and value of the facility being protected.
2. Investigate the severity and frequency of thunderstorms in the area of the substation facility and the exposure of the substation.
3. Select an appropriate design method consistent with the above evaluation and then lay out an appropriate system of protection.
4. Evaluate the effectiveness and cost of the resulting design.

The following paragraphs and references will assist the engineer in performing these steps.

12.2 Lightning Parameters

12.2.1 Strike Distance

Return stroke current magnitude and strike distance (length of the last stepped leader) are interrelated. A number of equations have been proposed for determining the striking distance. The principal ones are as follows:

$$S = 2I + 30\left(1 - e^{-I/6.8}\right) \qquad \text{Darveniza (1975)} \qquad (12.1)$$

$$S = 10\,I^{0.65} \qquad \text{Love (1987; 1993)} \qquad (12.2)$$

$$S = 9.4\,I^{2/3} \qquad \text{Whitehead (1974)} \qquad (12.3)$$

$$S = 8\,I^{0.65} \qquad \text{IEEE (1985)} \qquad (12.4)$$

$$S = 3.3\,I^{0.78} \qquad \text{Suzuki (1981)} \qquad (12.5)$$

where

S is the strike distance in meters
I is the return stroke current in kiloamperes

It may be disconcerting to note that the above equations vary by as much as a factor of 2:1. However, lightning investigators now tend to favor the shorter strike distances given by Equation 12.4. Anderson, for example, who adopted Equation 12.2 in the 1975 edition of the *Transmission Line Reference Book* (1987), now feels that Equation 12.4 is more accurate. Mousa (1988) also supports this form of the equation. The equation may also be stated as follows:

© 2003 by CRC Press LLC

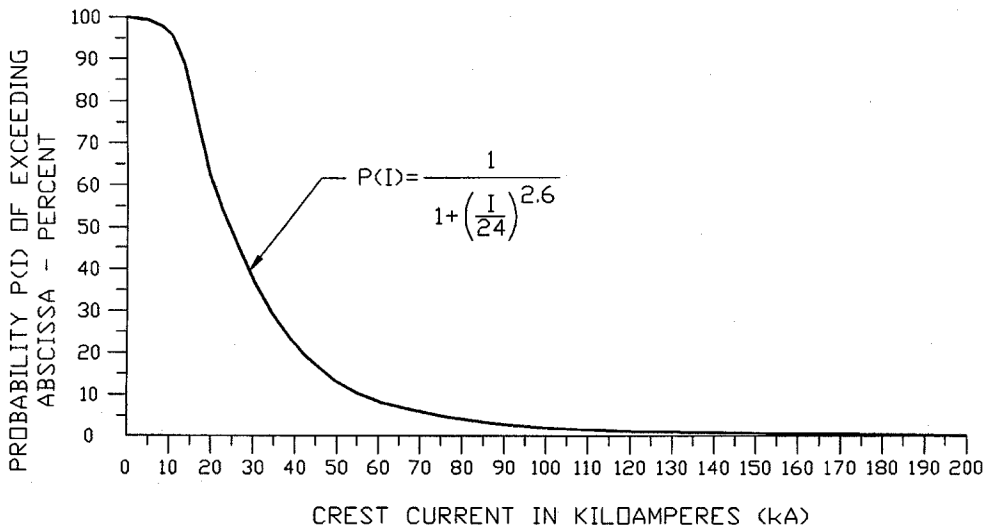

FIGURE 12.1 Probability of stroke current exceeding abscissa for strokes to flat ground. (IEEE Std. 998-1996. With permission.)

$$I = 0.041\, S^{1.54} \tag{12.6}$$

From this point on, the return stroke current will be referenced as the *stroke current*.

12.2.2 Stroke Current Magnitude

Since the stroke current and striking distance are related, it is of interest to know the distribution of stroke current magnitudes. The median value of strokes to OHGW, conductors, structures, and masts is usually taken to be 31 kA (Anderson, 1987). Anderson (1987) gave the probability that a certain peak current will be exceeded in any stroke as follows:

$$P(\mathrm{I}) = 1 \Big/ \left[1 + \left(I/31\right)^{2.6}\right] \tag{12.7}$$

where

P(I) is the probability that the peak current in any stroke will exceed *I*
I is the specified crest current of the stroke in kiloamperes

Mousa (1989) has shown that a median stroke current of 24 kA for strokes to flat ground produces the best correlation with available field observations to date. Using this median value of stroke current, the probability that a certain peak current will be exceeded in any stroke is given by the following equation:

$$P(\mathrm{I}) = 1 \Big/ \left[1 + \left(I/24\right)^{2.6}\right] \tag{12.8}$$

where the symbols have the same meaning as above.

Figure 12.1 is a plot of Equation 12.8, and Figure 12.2 is a plot of the probability that a stroke will be within the ranges shown on the abscissa.

© 2003 by CRC Press LLC

FIGURE 12.2 Stroke current range probability for strokes to flat ground. (IEEE Std. 998-1996. With permission.)

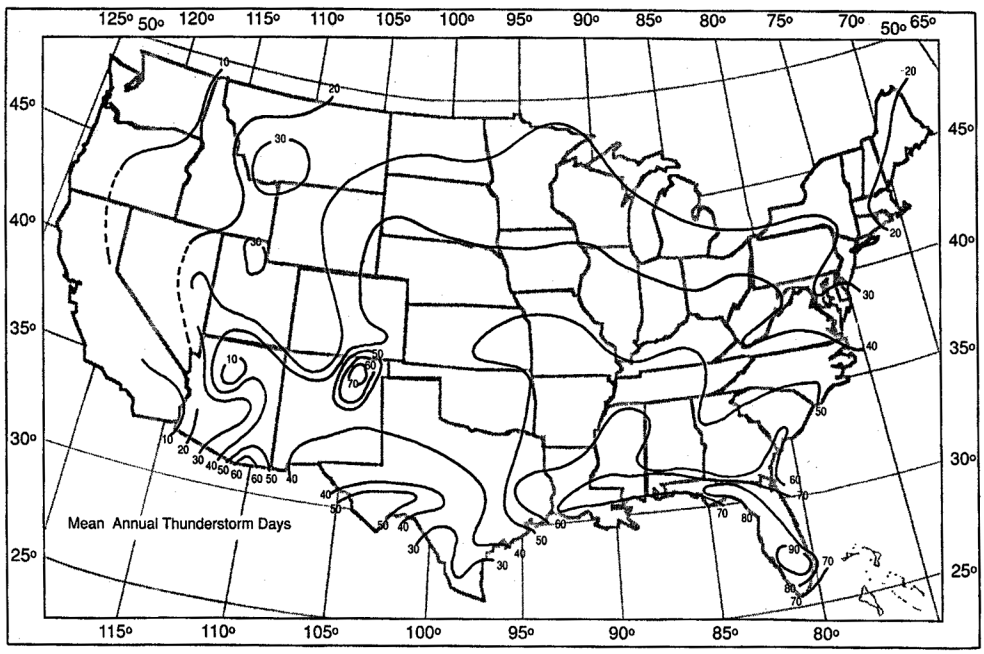

FIGURE 12.3 Mean annual thunderstorm days in the U.S. (IEEE Std. 998-1996. With permission.)

12.2.3 Keraunic Level

Keraunic level is defined as the average annual number of thunderstorm days or hours for a given locality. A daily keraunic level is called a thunderstorm-day and is the average number of days per year on which thunder will be heard during a 24-h period. By this definition, it makes no difference how many times thunder is heard during a 24-h period. In other words, if thunder is heard on any one day more than one time, the day is still classified as one thunder-day (or thunderstorm day). The average annual keraunic level for locations in the U.S. can be determined by referring to isokeraunic maps on which lines of equal keraunic level are plotted on a map of the country. Figure 12.3 gives the mean annual thunderstorm days for the U.S.

© 2003 by CRC Press LLC

12.2.4 Ground Flash Density

Ground flash density (GFD) is defined as the average number of strokes per unit area per unit time at a particular location. It is usually assumed that the GFD to earth, a substation, or a transmission or distribution line is roughly proportional to the keraunic level at the locality. If thunderstorm days are to be used as a basis, it is suggested that the following equation be used (Anderson, 1987):

$$N_k = 0.12\, T_d \tag{12.9}$$

or

$$N_m = 0.31\, T_d \tag{12.10}$$

where

N_k is the number of flashes to earth per square kilometer per year
N_m is the number of flashes to earth per square mile per year
T_d is the average annual keraunic level, thunderstorm days

12.2.5 Lightning Detection Networks

A new technology is now being deployed in Canada and the U.S. that promises to provide more accurate information about ground flash density and lightning stroke characteristics. Mapping of lightning flashes to the earth has been in progress for over a decade in Europe, Africa, Australia, and Asia. Now a network of direction-finding receiving stations has been installed across Canada and the U.S. By means of triangulation among the stations, and with computer processing of signals, it is possible to pinpoint the location of each lightning discharge. Hundreds of millions of strokes have been detected and plotted to date.

Ground flash density maps have already been prepared from this data, but with the variability in frequency and paths taken by thunderstorms from year to year, it will take a number of years to develop data that is statistically significant. Some electric utilities are, however, taking advantage of this technology to detect the approach of thunderstorms and to plot the location of strikes on their system. This information is very useful for dispatching crews to trouble spots and can result in shorter outages that result from lightning strikes.

12.3 Empirical Design Methods

Two classical design methods have historically been employed to protect substations from direct lightning strokes:

1. Fixed angles
2. Empirical curves

The two methods have generally provided acceptable protection.

12.3.1 Fixed Angles

The fixed-angle design method uses vertical angles to determine the number, position, and height of shielding wires or masts. Figure 12.4 illustrates the method for shielding wires, and Figure 12.5 illustrates the method for shielding masts. The angles used are determined by the degree of lightning exposure, the importance of the substation being protected, and the physical area occupied by the substation. The value of the angle alpha that is commonly used is 45°. Both 30° and 45° are widely used for angle beta. (Sample calculations for low-voltage and high-voltage substations using fixed angles are given in annex B of IEEE Std. 998-1996.)

© 2003 by CRC Press LLC

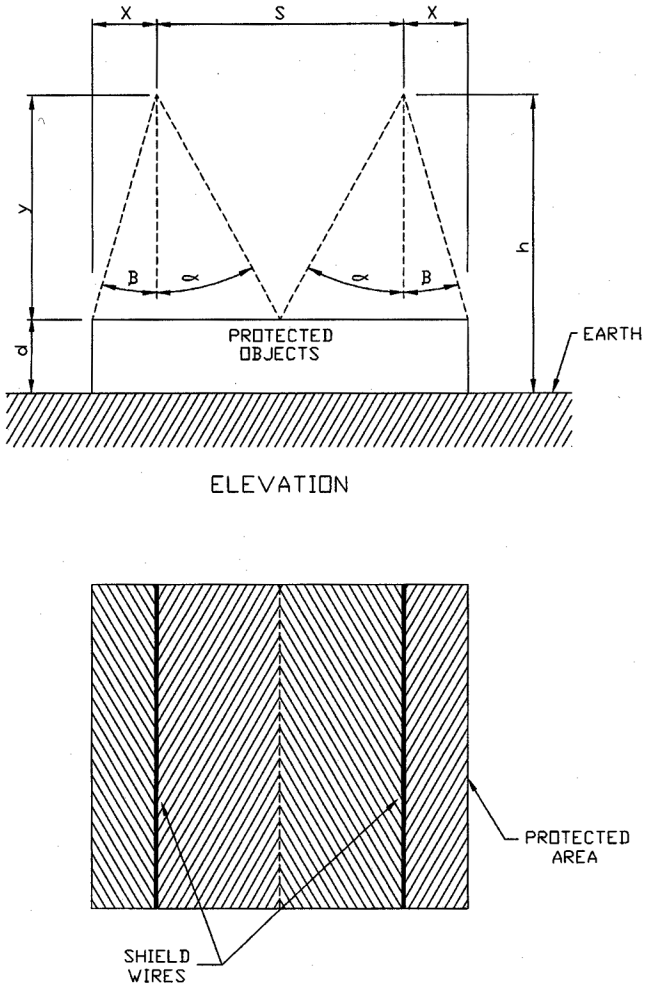

FIGURE 12.4 Fixed angles for shielding wires. (IEEE Std. 998-1996. With permission.)

12.3.2 Empirical Curves

From field studies of lightning and laboratory model tests, empirical curves have been developed to determine the number, position, and height of shielding wires and masts (Wagner et al., 1941; Wagner, 1942; Wagner, McCann, Beck, 1941). The curves were developed for shielding failure rates of 0.1, 1.0, 5.0, 10, and 15%. A failure rate of 0.1% is commonly used in design. Figure 12.6 and Figure 12.7 have been developed for a variety of protected object heights, *d*. The empirical curve method has also been referred to as the Wagner method.

12.3.2.1 Areas Protected by Lightning Masts

Figure 12.8 and Figure 12.9 illustrate the areas that can be protected by two or more shielding masts (Wagner et al., 1942). If two masts are used to protect an area, the data derived from the empirical curves give shielding information only for the point *B*, midway between the two masts, and for points on the semicircles drawn about the masts, with radius *x*, as shown in Figure 12.8a. The locus shown in Figure 12.8a, drawn by the semicircles around the masts, with radius *x*, and connecting the point *B*, represents an approximate limit for a selected exposure rate. Any single point falling within the cross-hatched area should have <0.1% exposure. Points outside the cross-hatched area will have >0.1% exposure. Figure 12.8b illustrates this phenomenon for four masts spaced at the distance s as in Figure 12.8a.

© 2003 by CRC Press LLC

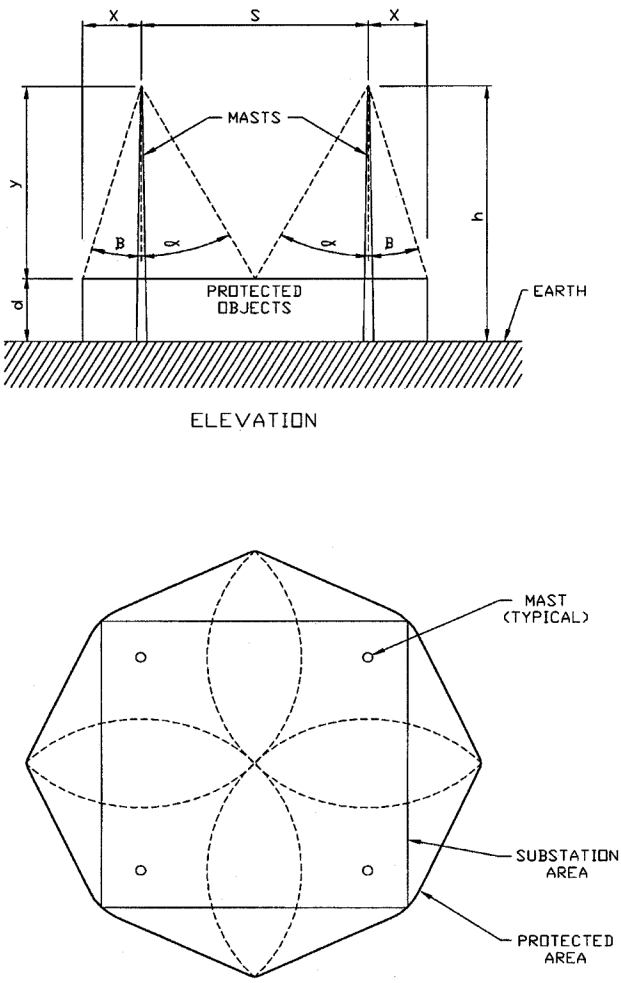

FIGURE 12.5 Fixed angles for masts. (IEEE Std. 998-1996. With permission.)

The protected area can be improved by moving the masts closer together, as illustrated in Figure 12.9. In Figure 12.9a, the protected areas are, at least, as good as the combined areas obtained by superimposing those of Figure 12.8a. In Figure 12.9a, the distance s' is one half the distance s in Figure 12.8a. To estimate the width of the overlap, x', first obtain a value of y corresponding to twice the distance s' between the masts. Then use Figure 12.6 to determine x' for this value of y. This value of x is used as an estimate of the width of overlap x' in Figure 12.9. As illustrated in Figure 12.9b, the size of the areas with an exposure greater than 0.1% has been significantly reduced. (Sample calculations for low-voltage and high-voltage substations using empirical curves are given in annex B of IEEE Std. 998-1996.)

12.4 The Electrogeometric Model (EGM)

Shielding systems developed using classical methods (fixed angles and empirical curves) of determining the necessary shielding for direct stroke protection of substations have historically provided a fair degree of protection. However, as voltage levels (and therefore structure and conductor heights) have increased over the years, the classical methods of shielding design have proven less adequate. This led to the development of the electrogeometric model.

© 2003 by CRC Press LLC

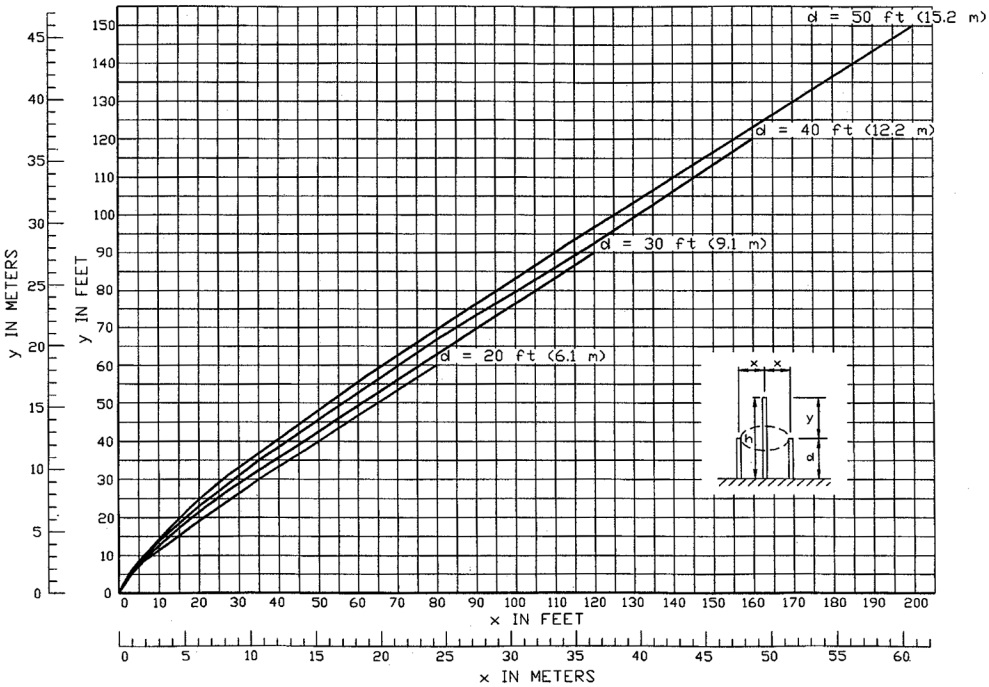

FIGURE 12.6 Single lightning mast protecting single ring of object — 0.1% exposure. Height of mast above protected object, *y*, as a function of horizontal separation, *x*, and height of protected object, *d*. (IEEE Std. 998-1996. With permission.)

12.4.1 Whitehead's EGM

In 1960, Anderson developed a computer program for calculation of transmission line lightning performance that uses the *Monte Carlo Method* (1961). This method showed good correlation with actual line performance. An early version of the EGM was developed in 1963 by Young et al., but continuing research soon led to new models. One extremely significant research project was performed by Whitehead (1971). Whitehead's work included a theoretical model of a transmission system subject to direct strokes, development of analytical expressions pertaining to performance of the line, and supporting field data that verified the theoretical model and analyses. The final version of this model was published by Gilman and Whitehead in 1973.

12.4.2 Recent Improvements in the EGM

Sargent made an important contribution with the *Monte Carlo Simulation* of lightning performance (1972) and his work on lightning strokes to tall structures (1972). Sargent showed that the frequency distribution of the amplitudes of strokes collected by a structure depends on the structure height as well as on its type (mast vs. wire). In 1976, Mousa extended the application of the EGM (which was developed for transmission lines) to substation facilities.

12.4.3 Criticism of the EGM

Work by Eriksson reported in 1978 and later work by Anderson and Eriksson reported in 1980 revealed apparent discrepancies in the EGM that tended to discredit it. Mousa (1988) has shown, however, that explanations do exist for the apparent discrepancies, and that many of them can be eliminated by adopting a revised electrogeometric model. Most investigators now accept the EGM as a valid approach for designing lightning shielding systems.

© 2003 by CRC Press LLC

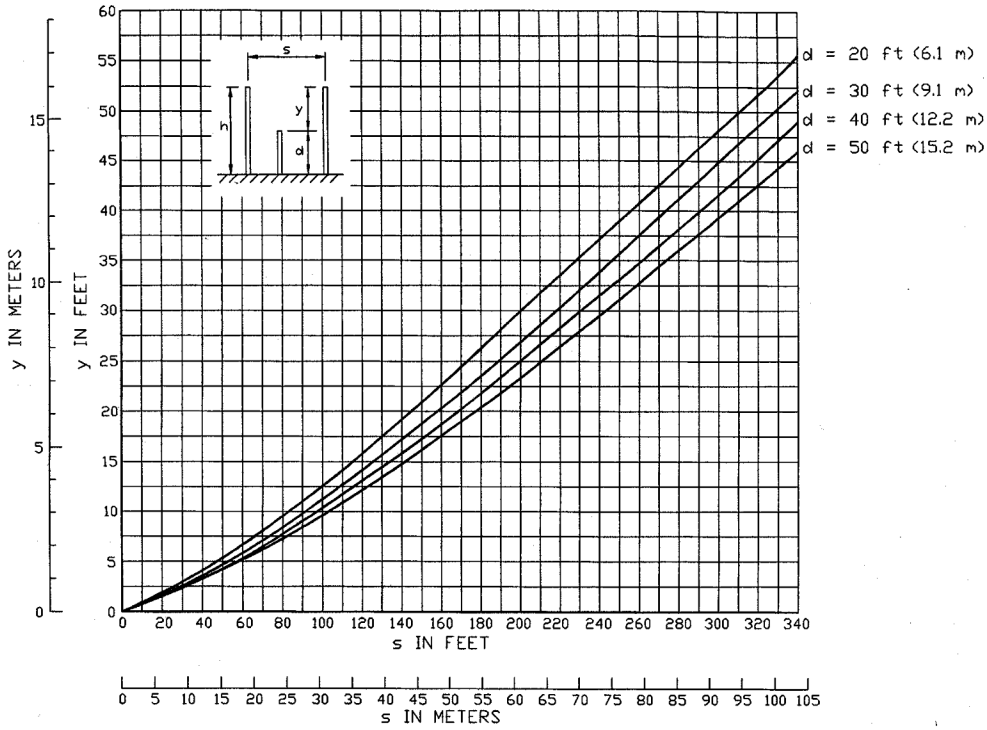

FIGURE 12.7 Two lightning masts protecting single object, no overlap — 0.1% exposure. Height of mast above protected object, *y*, as a function of horizontal separation, *s*, and height of protected object, *d*. (IEEE Std. 998-1996. With permission.)

12.4.4 A Revised EGM

The revised EGM was developed by Mousa and Srivastava (1986; 1988). Two methods of applying the EGM are the modified version of the rolling sphere method (Lee, 1979; Lee, 1978; Orell, 1988), and the method given by Mousa and Srivastava (1988; 1991).

The revised EGM model differs from Whitehead's model in the following respects:

1. The stroke is assumed to arrive in a vertical direction. (It has been found that Whitehead's assumption of the stroke arriving at random angles is an unnecessary complication [Mousa and Srivastava, 1988].)
2. The differing striking distances to masts, wires, and the ground plane are taken into consideration.
3. A value of 24 kA is used as the median stroke current (Mousa and Srivastava, 1989). This selection is based on the frequency distribution of the first negative stroke to flat ground. This value best reconciles the EGM with field observations.
4. The model is not tied to a specific form of the striking distance equations (Equation 12.1 through Equation 12.6). Continued research is likely to result in further modification of this equation as it has in the past. The best available estimate of this parameter may be used.

12.4.4.1 Description of the Revised EGM

Previously, the concept that the final striking distance is related to the magnitude of the stroke current was introduced and Equation 12.4 was selected as the best approximation of this relationship. A coefficient k accounts for the different striking distances to a mast, a shield wire, and to the ground. Equation 12.4 is repeated here with this modification:

© 2003 by CRC Press LLC

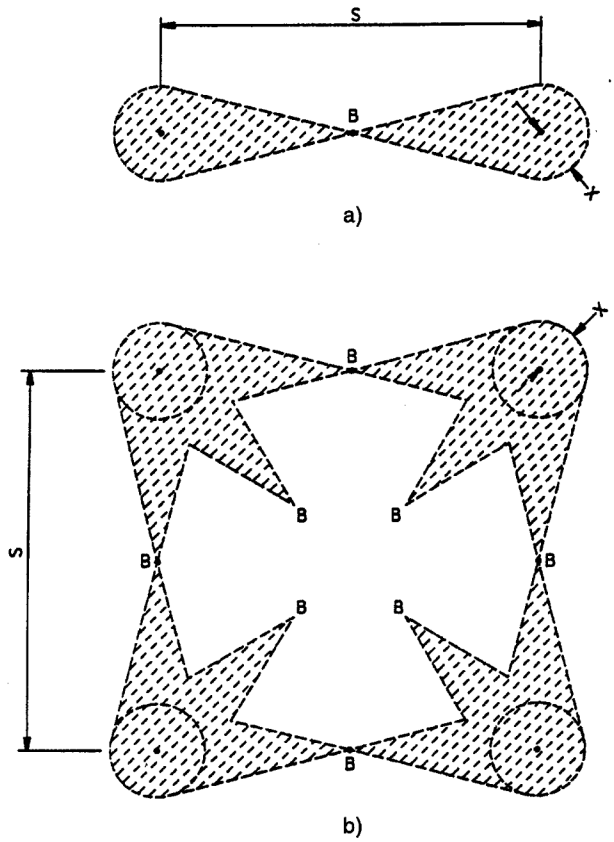

FIGURE 12.8 Areas protected by multiple masts for point exposures shown in Figure 12.5a with two lightning masts, 12.5b with four lightning masts. (IEEE Std. 998-1996. With permission.)

$$S_m = 8kI^{0.65} \tag{12.11}$$

or

$$S_f = 26.25kI^{0.65} \tag{12.12}$$

where

S_m is the strike distance in meters
S_f is the strike distance in feet
I is the return stroke current in kiloamperes
k is a coefficient to account for different striking distances to a mast, a shield wire, or the ground plane

Mousa (1988) gives a value of $k = 1$ for strokes to wires or the ground plane and a value of $k = 1.2$ for strokes to a lightning mast.

Lightning strokes have a wide distribution of current magnitudes, as shown in Figure 12.1. The EGM theory shows that the protective area of a shield wire or mast depends on the amplitude of the stroke current. If a shield wire protects a conductor for a stroke current I_s, it may not shield the conductor for a stroke current less than I_s that has a shorter striking distance. Conversely, the same shielding arrangement will provide greater protection against stroke currents greater than I_s that have greater striking distances.

© 2003 by CRC Press LLC

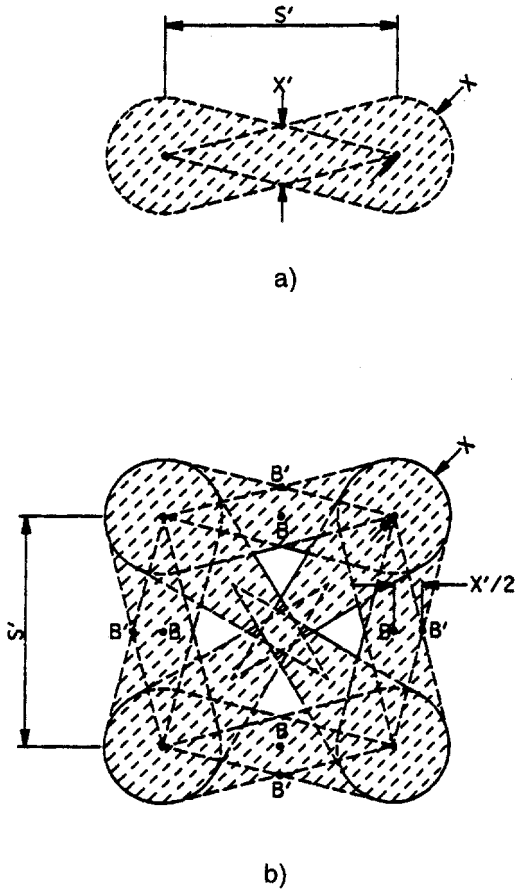

FIGURE 12.9 Areas protected by multiple masts for point exposures shown in Figure 12.5 (a) With two lightning masts; (b) with four lightning masts. (IEEE Std. 998-1996. With permission.)

Since strokes less than some critical value I_s can penetrate the shield system and terminate on the protected conductor, the insulation system must be able to withstand the resulting voltages without flashover. Stated another way, the shield system should intercept all strokes of magnitude I_s and greater so that flashover of the insulation will not occur.

12.4.4.2 Allowable Stroke Current

Some additional relationships need to be introduced before showing how the EGM is used to design a zone of protection for substation equipment. Bus insulators are usually selected to withstand a *basic lightning impulse level* (BIL). Insulators may also be chosen according to other electrical characteristics, including negative polarity *impulse critical flashover* (CFO) voltage. Flashover occurs if the voltage produced by the lightning stroke current flowing through the surge impedance of the station bus exceeds the withstand value. This may be expressed by the Gilman and Whitehead equation (1973):

$$I_S = \text{BIL} \times 1.1 \big/ \left(Z_S/2\right) = 2.2\left(\text{BIL}\right) \big/ Z_S \tag{12.13}$$

or

$$I_S = 0.94 \times \text{C.F.O.} \times 1.1 \big/ \left(Z_S/2\right) = 2.068\left(\text{C.F.O.}\right) \big/ Z_S \tag{12.14}$$

© 2003 by CRC Press LLC

where

I_s	is the allowable stroke current in kiloamperes
BIL	is the basic lightning impulse level in kilovolts
CFO	is the negative polarity critical flashover voltage of the insulation being considered in kilovolts
Z_s	is the surge impedance of the conductor through which the surge is passing in ohms
1.1	is the factor to account for the reduction of stroke current terminating on a conductor as compared to zero impedance earth (Gilman and Whitehead, 1973)

In Equation 12.14, the CFO has been reduced by 6% to produce a withstand level roughly equivalent to the BIL rating for post insulators.

Withstand Voltage of Insulator Strings

BIL values of station post insulators can be found in vendor catalogs. A method is given below for calculating the withstand voltage of insulator strings. The withstand voltage in kV at 2 μs and 6 μs can be calculated as follows:

$$V_{I2} = 0.94 \times 820\, w \tag{12.15}$$

$$V_{I6} = 0.94 \times 585\, w \tag{12.16}$$

where

w	is the length of insulator string (or air gap) in meters
0.94	is the ratio of withstand voltage to CFO voltage
V_{I2}	is the withstand voltage in kilovolts at 2 μs
V_{I6}	is the withstand voltage in kilovolts at 6 μs

Equation 12.16 is recommended for use with the EGM.

12.4.5 Application of the EGM by the Rolling Sphere Method

It was previously stated that it is only necessary to provide shielding for the equipment from all lightning strokes greater than I_s that would result in a flashover of the buswork. Strokes less than I_s are permitted to enter the protected zone since the equipment can withstand voltages below its BIL design level. This will be illustrated by considering three levels of stroke current: I_s, stroke currents greater than I_s, and stroke currents less than I_s. First, let us consider the stroke current I_s.

12.4.5.1 Protection Against Stroke Current I_s

I_s is calculated from Equation 12.13 or Equation 12.14 as the current producing a voltage the insulation will just withstand. Substituting this result in Equation 12.11 or Equation 12.12 gives the striking distance S for this stroke current. In 1977, Lee developed a simplified technique for applying the electrogeometric theory to the shielding of buildings and industrial plants (1982; 1979; 1978). Orrell extended the technique to specifically cover the protection of electric substations (1988). The technique developed by Lee has come to be known as the rolling sphere method. For the following illustration, the *rolling sphere* method will be used. This method employs the simplifying assumption that the striking distances to the ground, a mast, or a wire are the same. With this exception, the rolling sphere method has been updated in accordance with the revised EGM.

Use of the rolling sphere method involves rolling an imaginary sphere of radius S over the surface of a substation. The sphere rolls up and over (and is supported by) lightning masts, shield wires, substation fences, and other grounded metallic objects that can provide lightning shielding. A piece of equipment is said to be protected from a direct stroke if it remains below the curved surface of the sphere by virtue

© 2003 by CRC Press LLC

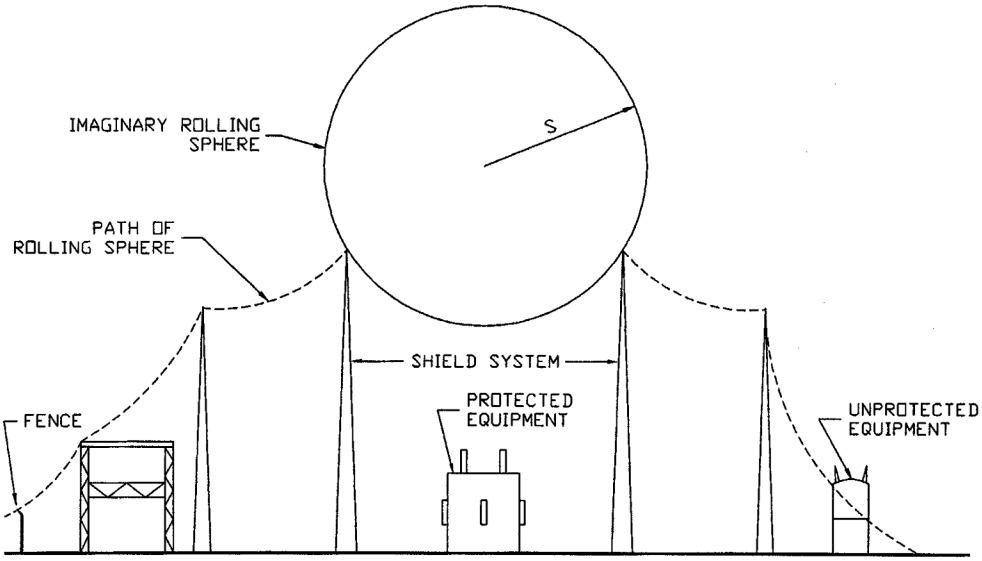

FIGURE 12.10 Principle of the rolling sphere. (IEEE Std. 998-1996. With permission.)

of the sphere being elevated by shield wires or other devices. Equipment that touches the sphere or penetrates its surface is not protected. The basic concept is illustrated in Figure 12.10.

Continuing the discussion of protection against stroke current I_s, consider first a single mast. The geometrical model of a single substation shield mast, the ground plane, the striking distance, and the zone of protection are shown in Figure 12.11. An arc of radius S that touches the shield mast and the ground plane is shown in Figure 12.11. All points below this arc are protected against the stroke current I_s. This is the protected zone. The arc is constructed as follows (see Figure 12.11). A dashed line is drawn parallel to the ground at a distance *S* (the striking distance as obtained from Equation 12.11 or Equation 12.12) above the ground plane. An arc of radius *S*, with its center located on the dashed line, is drawn so the radius of the arc just touches the mast. Stepped leaders that result in stroke current I_s and that descend outside of the point where the arc is tangent to the ground will strike the ground. Stepped leaders that result in stroke current I_s and that descend inside the point where the arc is tangent to the ground will strike the shield mast, provided all other objects are within the protected zone. The height of the shield mast that will provide the maximum zone of protection for stroke currents equal to I_s is *S*. If the mast height is less than *S*, the zone of protection will be reduced. *Increasing the shield mast height greater than S will provide additional protection in the case of a single mast. This is not necessarily true in the case of multiple masts and shield wires*. The protection zone can be visualized as the surface of a sphere with radius *S* that is rolled toward the mast until touching the mast. As the sphere is rolled around the mast, a three-dimensional surface of protection is defined. It is this concept that has led to the name *rolling sphere* for simplified applications of the electrogeometric model.

12.4.5.2 Protection Against Stroke Currents Greater than I_s

A lightning stroke current has an infinite number of possible magnitudes, however, and the substation designer will want to know if the system provides protection at other levels of stroke current magnitude. Consider a stroke current I_{s1} with magnitude greater than I_s. Strike distance, determined from Equation 12.11 or Equation 12.12, is *S*1. The geometrical model for this condition is shown in Figure 12.12. Arcs of protection for stroke current I_{s1} and for the previously discussed I_s are both shown. The figure shows that the zone of protection provided by the mast for stroke current I_{s1} is greater than the zone of protection provided by the mast for stroke current I_s. Stepped leaders that result in stroke current I_{s1} and that descend outside of the point where the arc is tangent to the ground will strike the

© 2003 by CRC Press LLC

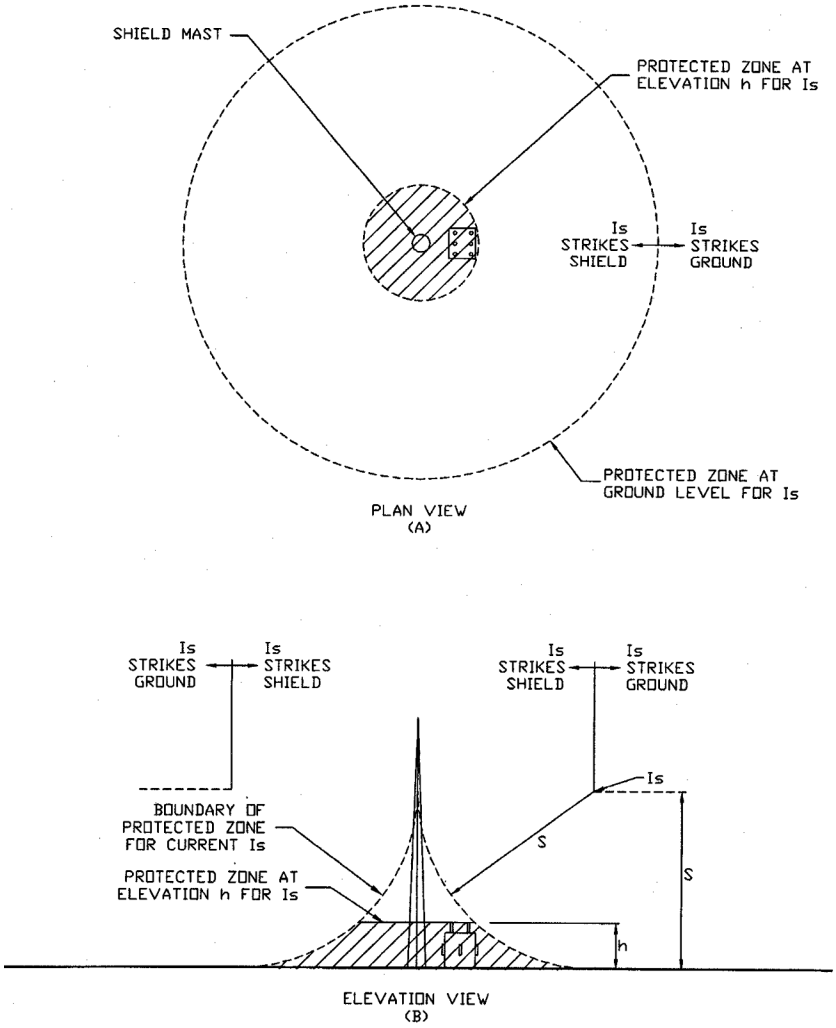

FIGURE 12.11 Shield mast protection for stroke current I_s. (IEEE Std. 998-1996. With permission.)

ground. Stepped leaders that result in stroke current I_{s1} and that descend inside the point where the arc is tangent to the ground will strike the shield mast, provided all other objects are within the $S1$ protected zone. Again, the protective zone can be visualized as the surface of a sphere touching the mast. In this case, the sphere has a radius $S1$.

12.4.5.3 Protection Against Stroke Currents Less than I_s

It has been shown that a shielding system that provides protection at the stroke current level I_s provides even better protection for larger stroke currents. The remaining scenario to examine is the protection afforded when stroke currents are less than I_s. Consider a stroke current I_{so} with magnitude less than I_s. The striking distance, determined from Equation 12.11 or Equation 12.12, is S_0. The geometrical model for this condition is shown in Figure 12.13. Arcs of protection for stroke current I_{so} and I_s are both shown. The figure shows that the zone of protection provided by the mast for stroke current I_{so} is less than the zone of protection provided by the mast for stroke current I_s. It is noted that a portion of the equipment protrudes above the dashed arc or zone of protection for stroke current I_{so}. Stepped leaders that result in stroke current I_{so} and that descend outside of the point where the arc is tangent to the ground will strike the ground. However, some stepped leaders that result in stroke current I_{so} and that descend inside the point where the arc is tangent to the ground could strike the equipment. This is best shown by

© 2003 by CRC Press LLC

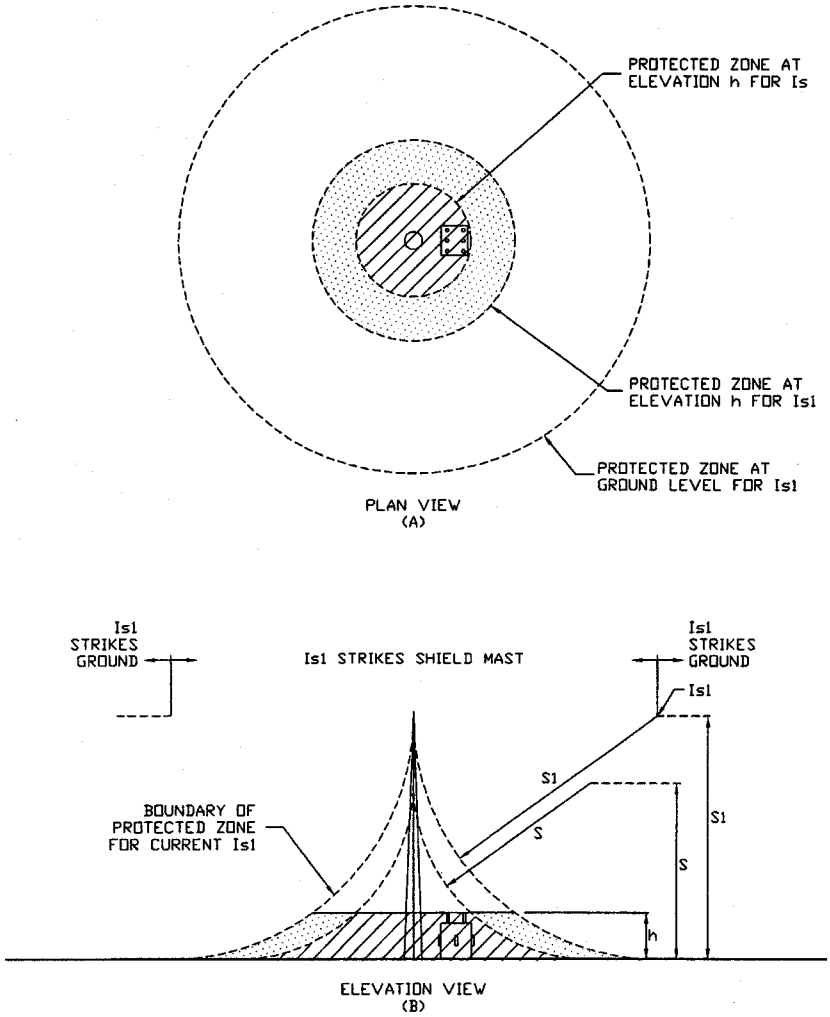

FIGURE 12.12 Shield mast protection for stroke current I_{s1}. (IEEE Std. 998-1996. With permission.)

observing the plan view of protective zones shown in Figure 12.13. Stepped leaders for stroke current I_{so} that descend inside the inner protective zone will strike the mast and protect equipment that is h in height. Stepped leaders for stroke current I_{so} that descend in the shaded unprotected zone will strike equipment of height h in the area. *If, however, the value of I_s was selected based on the withstand insulation level of equipment used in the substation, stroke current I_{so} should cause no damage to equipment.*

12.4.6 Multiple Shielding Electrodes

The electrogeometric modeling concept of direct stroke protection has been demonstrated for a single shield mast. A typical substation, however, is much more complex. It may contain several voltage levels and may utilize a combination of shield wires and lightning masts in a three-dimensional arrangement. The above concept can be applied to multiple shielding masts, horizontal shield wires, or a combination of the two. Figure 12.14 shows this application considering four shield masts in a multiple shield mast arrangement. The arc of protection for stroke current I_s is shown for each set of masts. The dashed arcs represent those points at which a descending stepped leader for stroke current I_s will be attracted to one of the four masts. The protected zone between the masts is defined by an arc of radius S with the center

© 2003 by CRC Press LLC

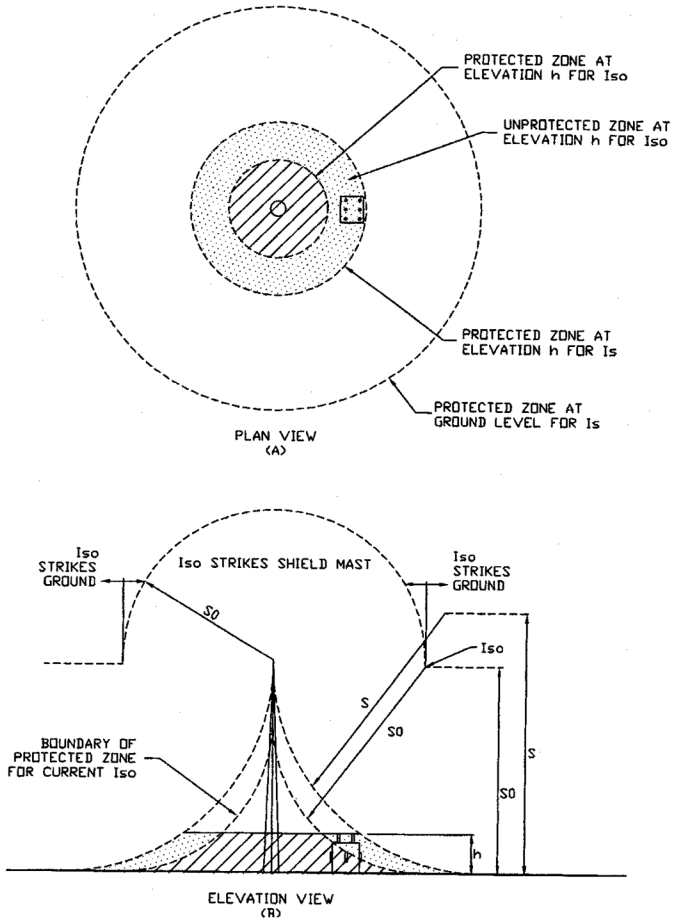

FIGURE 12.13 Shield mast protection for stroke current I_{s0}. (IEEE Std. 998-1996. With permission.)

at the intersection of the two dashed arcs. The protective zone can again be visualized as the surface of a sphere with radius *S*, which is rolled toward a mast until touching the mast, then rolled up and over the mast such that it would be supported by the masts. The dashed lines would be the locus of the center of the sphere as it is rolled across the substation surface. Using the concept of rolling a sphere of the proper radius, the protected area of an entire substation can be determined. This can be applied to any group of different height shield masts, shield wires, or a combination of the two. Figure 12.15 shows an application to a combination of masts and shield wires.

12.4.7 Changes in Voltage Level

Protection has been illustrated with the assumption of a single voltage level. Substations, however, have two or more voltage levels. The rolling sphere method is applied in the same manner in such cases, except that the sphere radius would increase or decrease appropriate to the change in voltage at a transformer. (Sample calculations for a substation with two voltage levels are given in annex B of IEEE Std. 998-1996.)

12.4.8 Minimum Stroke Current

The designer will find that shield spacing becomes quite close at voltages of 69 kV and below. It may be appropriate to select some minimum stroke current, perhaps 2 kA for shielding stations below 115 kV. Such an approach is justified by an examination of Figure 12.1 and Figure 12.2. It will be found that

© 2003 by CRC Press LLC

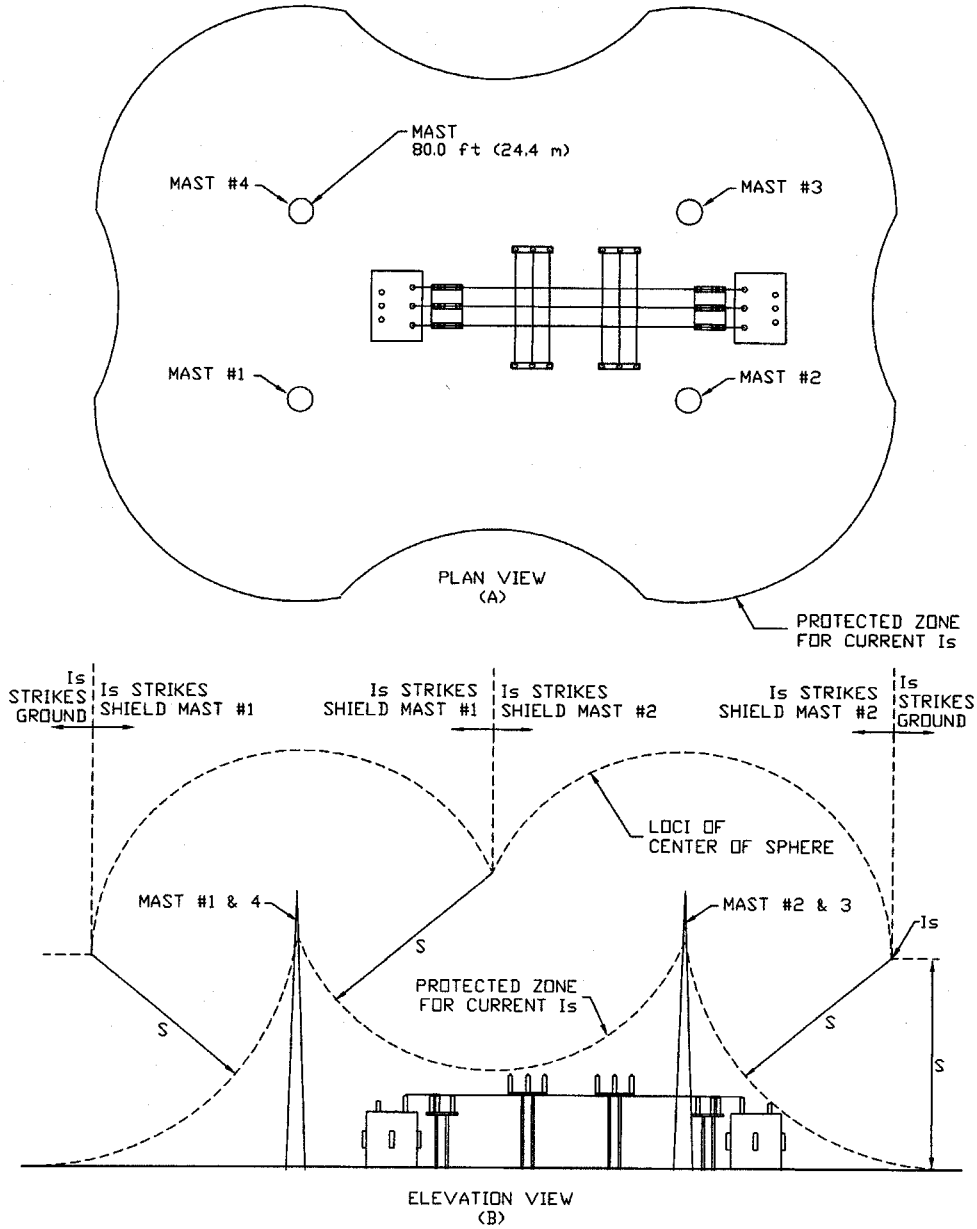

FIGURE 12.14 Multiple shield mast protection for stroke current I_s. (IEEE Std. 998-1996. With permission.)

99.8% of all strokes will exceed 2 kA. Therefore, this limit will result in very little exposure, but will make the shielding system more economical.

12.4.9 Application of Revised EGM by Mousa and Srivastava Method

The rolling sphere method has been used in the preceding paragraphs to illustrate application of the EGM. Mousa describes the application of the revised EGM (1976). Figure 12.16 depicts two shield wires, Gl, and G2, providing shielding for three conductors, W1, W2, and W3. S_c is the critical striking distance as determined by Equation 12.11, but reduced by 10% to allow for the statistical distribution of strokes so as to preclude any failures. Arcs of radius S_c are drawn with centers at G1, G2, and W2 to determine

© 2003 by CRC Press LLC

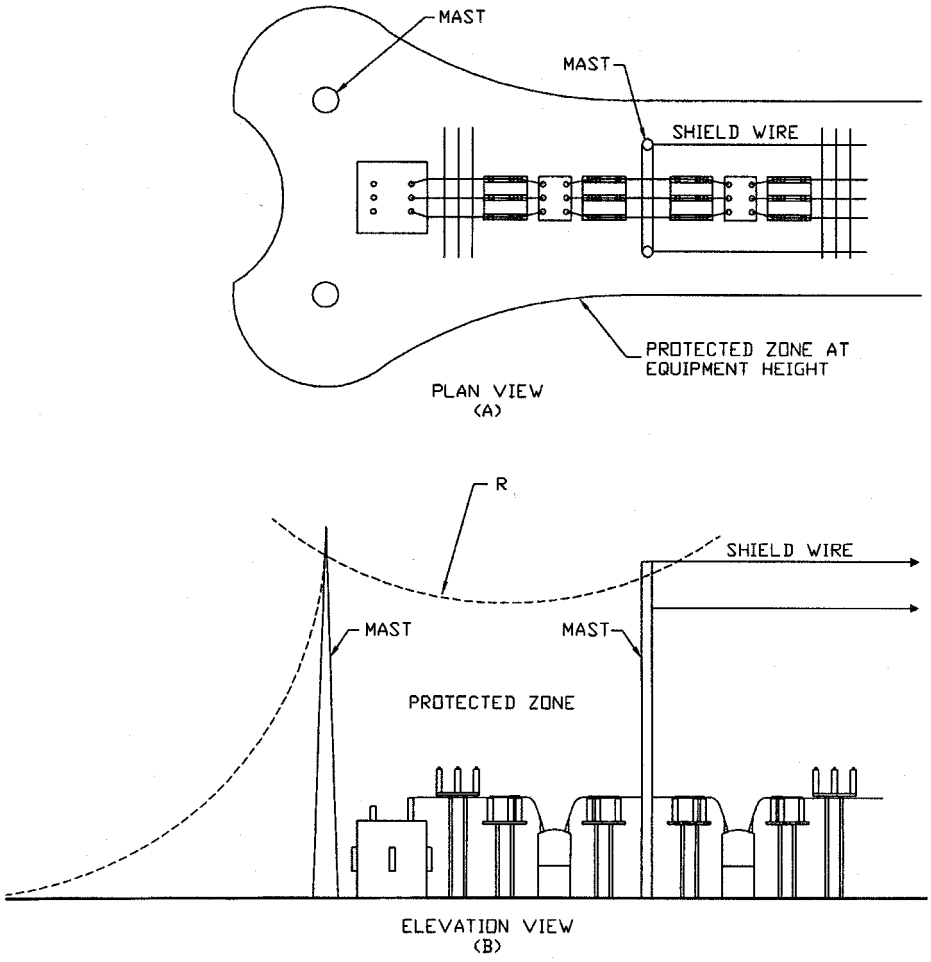

FIGURE 12.15 Protection by shield wires and masts. (IEEE Std. 998-1996. With permission.)

if the shield wires are positioned to properly shield the conductors. The factor ψ is the horizontal separation of the outer conductor and shield wire, and b is the distance of the shield wires above the conductors. Figure 12.17 illustrates the shielding provided by four masts. The height h_{mid} at the center of the area is the point of minimum shielding height for the arrangement. For further details in the application of the method, see Mousa (1976). At least two computer programs have been developed that assist in the design of a shielding system. One of these programs (Mousa, 1991) uses the revised EGM to compute the surge impedance, stroke current, and striking distance for a given arrangement of conductors and shield systems, then advises the user whether or not effective shielding is provided. (Sample calculations are provided in annex B of IEEE Std. 998-1996 to further illustrate the application.)

12.5 Calculation of Failure Probability

In the revised EGM just presented, striking distance is reduced by a factor of 10% so as to exclude all strokes from the protected area that could cause damage. In the empirical design approach, on the other hand, a small failure rate is permitted, typically 0.1%. Linck (1975) also developed a method to provide partial shielding using statistical methods. It should be pointed out that for the statistical approach to be valid, the size of the sample needs to be large. For power lines that extend over large distances, the total exposure area is large and the above criterion is met. It is questionable, therefore, whether the

© 2003 by CRC Press LLC

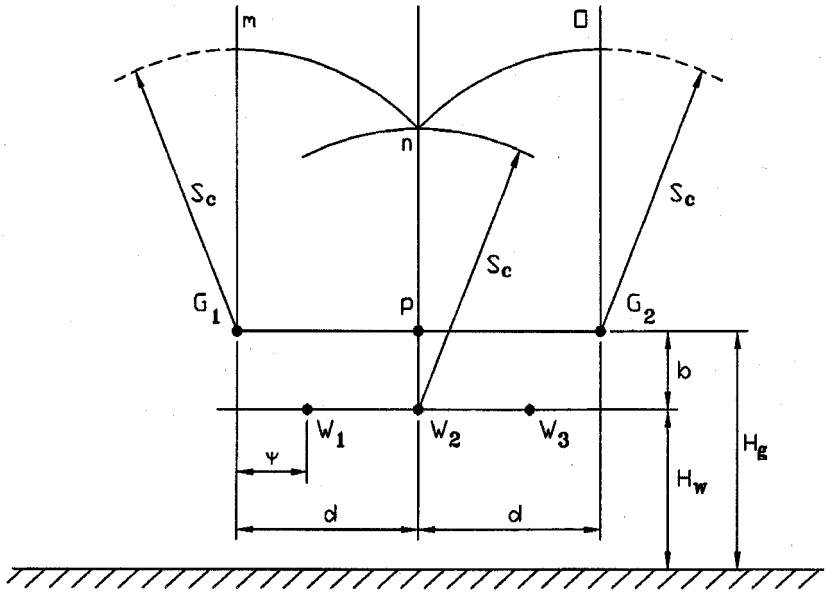

FIGURE 12.16 Shielding requirements regarding the strokes arriving between two shield wires. (IEEE Std. 998-1996. With permission.)

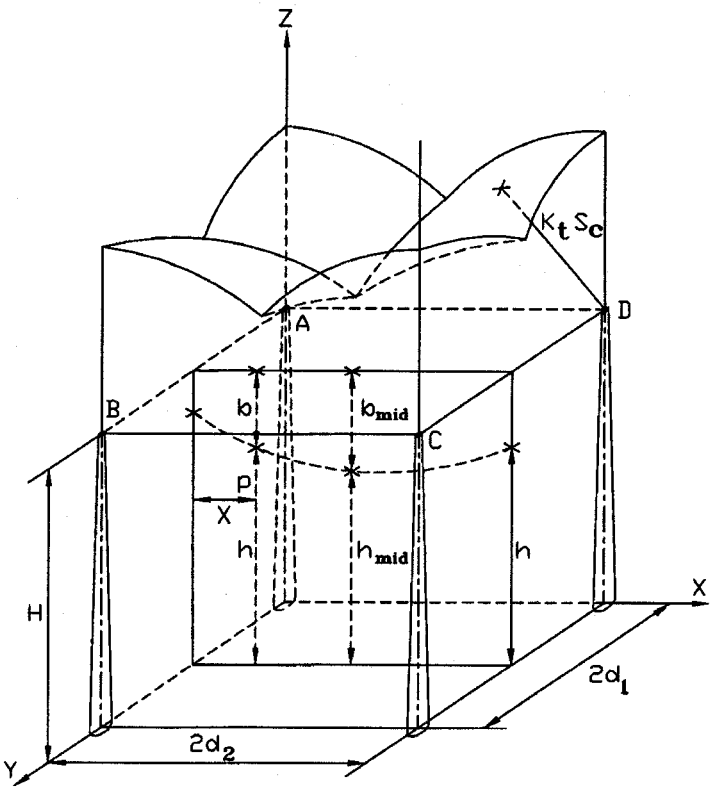

FIGURE 12.17 Shielding of an area bounded by four masts. (IEEE Std. 998-1996. With permission.)

© 2003 by CRC Press LLC

statistical approach is as meaningful for substations that have very small exposure areas by comparison. Engineers do, however, design substation shielding that permits a small statistical failure rate. Orrell (1988) has developed a method of calculating failure rates for the EGM rolling sphere method. (This method is described with example calculations in annex D of IEEE Std. 998-1996.)

12.6 Active Lightning Terminals

In the preceding methods, the lightning terminal is considered to be a *passive* element that intercepts the stroke merely by virtue of its position with respect to the live bus or equipment. Suggestions have been made that lightning protection can be improved by using what may be called *active* lightning terminals. Three types of such devices have been proposed over the years:

- *Lightning rods with radioactive tips* (Golde, 1973). These devices are said to extend the attractive range of the tip through ionization of the air.
- *Early Streamer Emission (ESM) lightning rods* (Berger and Floret, 1991). These devices contain a triggering mechanism that sends high-voltage pulses to the tip of the rod whenever charged clouds appear over the site. This process is said to generate an upward streamer that extends the attractive range of the rod.
- *Lightning prevention devices*. These devices enhance the *point discharge* phenomenon by using an array of needles instead of the single tip of the standard lightning rod. It is said that the space charge generated by the many needles of the array neutralize part of the charge in an approaching cloud and prevent a return stroke to the device, effectively extending the protected area (Carpenter, 1976).

Some of the latter devices have been installed on facilities (usually communications towers) that have experienced severe lightning problems. The owners of these facilities have reported no further lightning problems in many cases.

There has not been sufficient scientific investigation to demonstrate that the above devices are effective; and since these systems are proprietary, detailed design information is not available. It is left to the design engineer to determine the validity of the claimed performance for such systems.

References

This reference list is reprinted in part from IEEE Working Group D5, Substations Committee, *Guide for Direct Lightning Stroke Shielding of Substations,* IEEE Std. 998-1996.

Anderson, R. B. and Eriksson, A. J., Lightning parameters for engineering application, *Electra*, no. 69, 65–102, Mar. 1980.

Anderson, J. G., Monte Carlo computer calculation of transmission-line lightning performance, *AIEE Transactions*, 80, 414–420, Aug. 1961.

Anderson, J. G., *Transmission Line Reference Book 345 kV and Above*, 2nd ed. Rev. Palo Alto, CA: Electric Power Research Institute, 1987, chap. 12.

Berger, G. and Floret, N., Collaboration produces a new generation of lightning rods, *Power Technol. Int.*, London: Sterling Publications, 185–190, 1991.

Carpenter, R. B., Jr., Lightning Elimination. Paper PCI-76-16 given at the *23rd Annual Petroleum and Chemical Industry Conference* 76CH1109-8-IA, 1976.

Darveniza, M., Popolansky, F., and Whitehead, E. R., Lightning protection of UHV transmission lines, *Electra,* no. 41, 36–69, July 1975.

Eriksson, A. J., Lightning and tall structures, *Trans. South African IEE*, 69(8), 238–252, Aug. 1978. Discussion and closure published May 1979, vol. 70, no. 5, 12 pages.

Gilman D. W. and Whitehead, E. R., The mechanism of lightning flashover on high voltage and extra-high voltage transmission lines, *Electra*, no. 27, 65-96, Mar. 1973.

© 2003 by CRC Press LLC

Golde, R. H., Radio-active lightning conductors, *Lightning Protection*, London: Edward Arnold Publishing Co., 37–40, 196–197, 1973.

Grigsby, L. L., *The Electric Power Engineering Handbook,* CRC Press, Boca Raton, FL, 2001.

Guide for Direct Lightning Stroke Shielding of Substations, IEEE Std. 998-1996, IEEE Working Group D5, Substations Committee.

IEEE Working Group, Estimating lightning performance of transmission lines. II. Updates to analytic models, *IEEE Trans. on Power Delivery,* 8(3), 1254–1267, July 1993.

IEEE Working Group, A simplified method for estimating lightning performance of transmission lines, *IEEE Trans. on Power Appar. and Syst.,* PAS-104, no. 4, 919–932, 1985.

Lee, R. H., Lightning protection of buildings, *IEEE Trans. on Ind. Appl.*, IA-15(3), 236–240, May/June 1979.

Lee, R. H., Protection zone for buildings against lightning strokes using transmission line protection practice, *IEEE Trans. on Ind. Appl.*, 1A-14(6), 465–470, 1978.

Lee, R. H., Protect your plant against lightning, *Instruments and Control Systems*, 55(2), 31–34, Feb. 1982.

Linck, H., Shielding of modern substations against direct lightning strokes, *IEEE Trans. on Power Appar. and Syst.,* PAS-90(5), 1674–1679, Sept./Oct. 1975.

Mousa, A. M., A computer program for designing the lightning shielding systems of substations, *IEEE Trans. on Power Delivery,* 6(1), 143–152, 1991.

Mousa, A. M., Shielding of high-voltage and extra-high-voltage substations, *IEEE Trans. on Power Appar. and Syst.,* PAS-95(4), 1303–1310, 1976.

Mousa, A. M., A Study of the Engineering Model of Lightning Strokes and its Application to Unshielded Transmission Lines, Ph.D. thesis, University of British Columbia, Vancouver, Canada, Aug. 1986.

Mousa, A. M. and Srivastava, K. D., The implications of the electrogeometric model regarding effect of height of structure on the median amplitudes of collected lightning strokes, *IEEE Trans. on Power Delivery,* 4(2), 1450–1460, 1989.

Mousa, A. M. and Srivastava, K. D., A revised electrogeometric model for the termination of lightning strokes on ground objects, in *Proceedings of International Aerospace and Ground Conference on Lightning and Static Electricity*, Oklahoma City, OK, Apr. 1988, 342–352.

Orrell, J. T., Direct stroke lightning protection, Paper presented at EEI Electrical System and Equipment Committee Meeting, Washington, D.C., 1988.

Sargent, M. A., The frequency distribution of current magnitudes of lightning strokes to tall structures, *IEEE Trans. on Power Appar. and Syst.,* PAS-91(5), 2224–2229, 1972.

Sargent, M. A., Monte Carlo simulation of the lightning performance of overhead shielding networks of high-voltage stations, *IEEE Trans. on Power Appar. and Syst.,* PAS-91(4), 1651–1656, 1972.

Suzuki, T., Miyake, K., and Shindo, T., Discharge path model in model test of lightning strokes to tall mast, *IEEE Trans. on Power Appar. and Syst.,* PAS-100(7), 3553–3562, 1981.

Wagner, C. F., McCann, G. D., and Beck, E., Field investigations of lightning, *AIEE Trans.*, 60, 1222–1230, 1941.

Wagner C. F., McCann, G. D., and Lear, C. M., Shielding of substations, *AIEE Trans.*, 61, 96–100, 313,448, Feb. 1942.

Wagner, C. F., McCann, G. D., and MacLane, G. L., Shielding of transmission lines, *AIEE Trans.*, 60, 313-328, 612–614, 1941.

Whitehead, E. R., CIGRE survey of the lightning performance of extra-high-voltage transmission lines, *Electra*, 63–89, Mar. 1974.

Whitehead, E. R., Mechanism of lightning flashover, EEI Research Project RP 50, Illinois Institute of Technology, Pub 72-900, Feb. 1971.

Young, E. S., Clayton, J. M., and Hileman, A. R., Shielding of transmission lines, *IEEE Trans. on Power Appar. and Syst.,* S82, 132–154, 1963.

© 2003 by CRC Press LLC

13

Seismic Considerations[1]

R.P. Stewart
BC Hydro

Rulon Fronk
Consultant

Tonia Jurbin
BC Hydro

13.1 Historical Perspective **13**-1
13.2 IEEE 693 — a Solution **13**-1
13.3 Relationship between Earthquakes and Substations **13**-2
13.4 Applicable Documents **13**-2
13.5 Decision Process for Seismic Design Considerations **13**-3
13.6 Performance Levels and Required Spectra **13**-3
Background • High and Moderate Levels • Low Level
13.7 Qualification Process **13**-10
References **13**-11

13.1 Historical Perspective

Prior to 1970, seismic requirements for substation components were minimal. In the 1970s and 1980s, several large-magnitude earthquakes struck California, causing millions of dollars in damage to substation components and consequent losses of revenue. As a result of these losses, it became apparent to owners and operators of substation facilities in seismically active areas that the existing seismic requirements for substation components were inadequate. The 1997 version of the Institute of Electrical and Electronic Engineers (IEEE) Standard 693-1997, Seismic Design for Substations [1], and the document presently being produced by the American Society of Civil Engineers (ASCE), entitled Substation Structure Design Guide [2], have enhanced the current state of knowledge in this area. These documents also promote seismic standardization of substation power equipment in the electric power industry.

13.2 IEEE 693 — a Solution

The requirements necessary to qualify that substation power equipment can withstand seismic events were developed from research into seismic activity. No standard existed that provided a single set of requirements for seismic qualification of power equipment. The existing standard and guides provided methods for qualifying, but there was not a single set that, when met, would provide qualification. This is the main goal of IEEE 693: to provide a single set of requirements for each typical type of equipment that, when met, would provide qualification. Thus, the goal is that the manufacturer can include seismic requirements in the initial design of the equipment and amortize the cost of the qualification over all of the expected buyers.

This chapter discusses the current version of IEEE 693, released in 1997, and the changes in the next version of IEEE 693, scheduled to be published in 2004.

The relationship between seismic activity and substation equipment qualification is very complex and, because of the complexities, the IEEE 693 committee has attempted to simplify the application of the

[1]Some material in this chapter from Stewart, R.P., Fronk, R., and Jurbin, T., Seismic considerations, in *The Electric Power Engineering Handbook,* Grigsby, L.L., Ed., CRC Press, Boca Raton, FL, 2001.

0-8493-1703-7/03/$0.00+$1.50
© 2003 by CRC Press LLC

© 2003 by CRC Press LLC

qualification process by organizing the information needed in the specification into four concise categories. These instructions will be discussed further, but briefly they are:

1. Note the equipment type, such as surge arresters or circuit breakers
2. Select the qualification level — low, moderate, or high
3. Note the equipment *in situ* configuration, such as mounting information, etc.
4. Identify scheduling requirements

The 2004 version will further simplify the process by providing a simple form to assist the user in specifying these requirements.

This chapter is intended to guide substation designers who have little familiarity with substation seismic design considerations by illustrating the basic steps required for securing and protecting components within a given substation. It is only a guide, and it is not intended to be all-inclusive or to provide all the necessary details to undertake such work. For further details and information on this topic, the reader should review the documents listed at the end of this chapter.

13.3 Relationship between Earthquakes and Substations

To secure and protect substation equipment from damage due to a seismic event, the relationship between earthquakes and substation components must first be understood. Earthquakes occur when there is a sudden rupture along a preexisting geologic fault. Shock waves that radiate from the fracture zone amplify, and depending on the geology, these waves will arrive at the surface as a complex set of multifrequency vibratory ground motions with horizontal and vertical components.

The response of structures and buildings to this ground motion depends on their construction, ductility, dynamic properties, and design. Lightly damped structures that have one or more natural modes of oscillation within the frequency band of the ground motion excitation can experience considerable movement, which can generate forces and deflections that the structures were not designed to accommodate. Mechanisms that absorb energy in a structure in response to its motion can help in damping these forces. If two or more structures or pieces of equipment are linked, they will interact with one another, thus producing a modified response. If they are either not linked, or linked in such a way that the two pieces can move independently — an ideal situation — then no forces are transferred between the two components. However, recent research has shown that even a well-designed link may contribute to the response of the equipment or structure during a seismic event.

For electrical reasons, most pieces of substation power equipment are interconnected and contain porcelain. Porcelain is a relatively brittle, low-strength, and low-damping material compared with steel. Furthermore, unless instructed to do otherwise, construction personnel will install conductors with little or no slack, which gives the installation a neat and clean look. This practice does not allow for any freedom of movement between components. When the conductor is installed with little or no slack, even small differential motions of one piece of equipment can easily impact an adjacent piece of equipment. This is because each piece of interconnected equipment has its own frequency response to an earthquake. While the equipment at one end of a tight conductor line is vibrating at 1 Hz, for example, the other piece of equipment at the other end of the conductor is "trying" to vibrate at, say, 10 Hz. It is easy to see that when they vibrate toward each other, the line will go slack. When they vibrate away from each other, the line will suddenly snap tight, which will impact the equipment. This is a well-documented occurrence. Usually, the larger, more massive equipment will pull the smaller, weaker equipment over. Substation equipment with natural frequencies within the range of earthquake ground motions are especially vulnerable to this type of damage by seismic events.

13.4 Applicable Documents

Once the relationship between substation components and earthquakes is understood, the substation designer should become familiar with the standards and references currently available (see reference list at the end of

© 2003 by CRC Press LLC

this chapter). It is important for the user to appreciate how the various documents interrelate. Although the title of IEEE 693 is Recommended Practice for Seismic Design of Substations, it was clear to the IEEE 693 committee that other documents had already addressed many of the aspects of seismic design of substations. Therefore, IEEE 693 simply refers the users to the appropriate document if the information is not contained therein. It was also clear that a single set of seismic qualification requirements was needed; therefore the IEEE 693 emphasizes those aspects associated with the seismic qualification of power equipment.

Special attention also needs to be given to the ASCE's Substation Structure Design Guide. This guide provides information for all of the structures within a substation, such as A-frames, buildings, racks, etc. Since these two documents, IEEE 693 and the ASCE guide, were developed at about the same time, the two committees collaborated so that the two documents would complement each other. Simply stated, IEEE 693 addresses the equipment and its "first" support structure, while the ASCE guide addresses all the other structures.

13.5 Decision Process for Seismic Design Considerations

Once document familiarization is complete, the designer can follow the steps as outlined in Figure 13.1, which was created with the assumption that each substation component will be reviewed independently.

The first step in the decision-making process is to determine whether the substation component under consideration is classified as power equipment or not. Assuming the component is classified as nonpower equipment, the next step is to determine what type of nonpower equipment the component is. For example, a structure such as a bus support may require foundation modification or anchor design work. Once the component type is determined, the appropriate references can be accessed and the required engineering work carried out. The decision-making process for substation components classified as nonpower equipment is then complete.

If the substation component under consideration is found to be a piece of power equipment, the next step in the power equipment decision process stream is to determine if this equipment is classified as Class 1E, equipment for nuclear power generating stations. IEEE 693 does not cover Class 1E equipment, but this information is available in IEEE 344 (1993) [3].

In the upcoming 2004 version, the next step of the power equipment stream will be to determine if this equipment's voltage class is less than 35,000 V. This is a new qualification classification that will be included in 2004. It is the "inherently acceptable" classification, meaning that this equipment has performed well in earthquakes without additional requirements. Most equipment less than 35 kV now falls in the category "inherently acceptable."

Certain types of equipment rated 15,000 V and less can be qualified using the experience-based qualification method as per Annex Q of IEEE 693. All other substation power equipment must be qualified as per the appropriate section in IEEE 693. It should be noted that IEEE 693 was written primarily for new installations, but it can be used to assist designers in the analysis of seismic requirements for existing equipment as well. Anchor design issues should be addressed as per the ASCE document and IEEE 693, as indicated in IEEE 693.

13.6 Performance Levels and Required Spectra

13.6.1 Background

Following the voltage classification, determination of the appropriate performance level for seismic qualification of the site in question must be selected. The performance level of earthquake motion is represented by response spectra that reasonably envelop response spectra from anticipated ground motions determined using earthquake records. The shape of the performance level is a broadband response spectrum that envelops the effects of earthquakes in different areas for site conditions ranging from soft soils to rock, as described in the National Earthquake Hazard Reduction Program (NEHRP) [4]. In 2004, the NEHRP maps will be replaced with the International Building Code (IBC) [5] maps.

© 2003 by CRC Press LLC

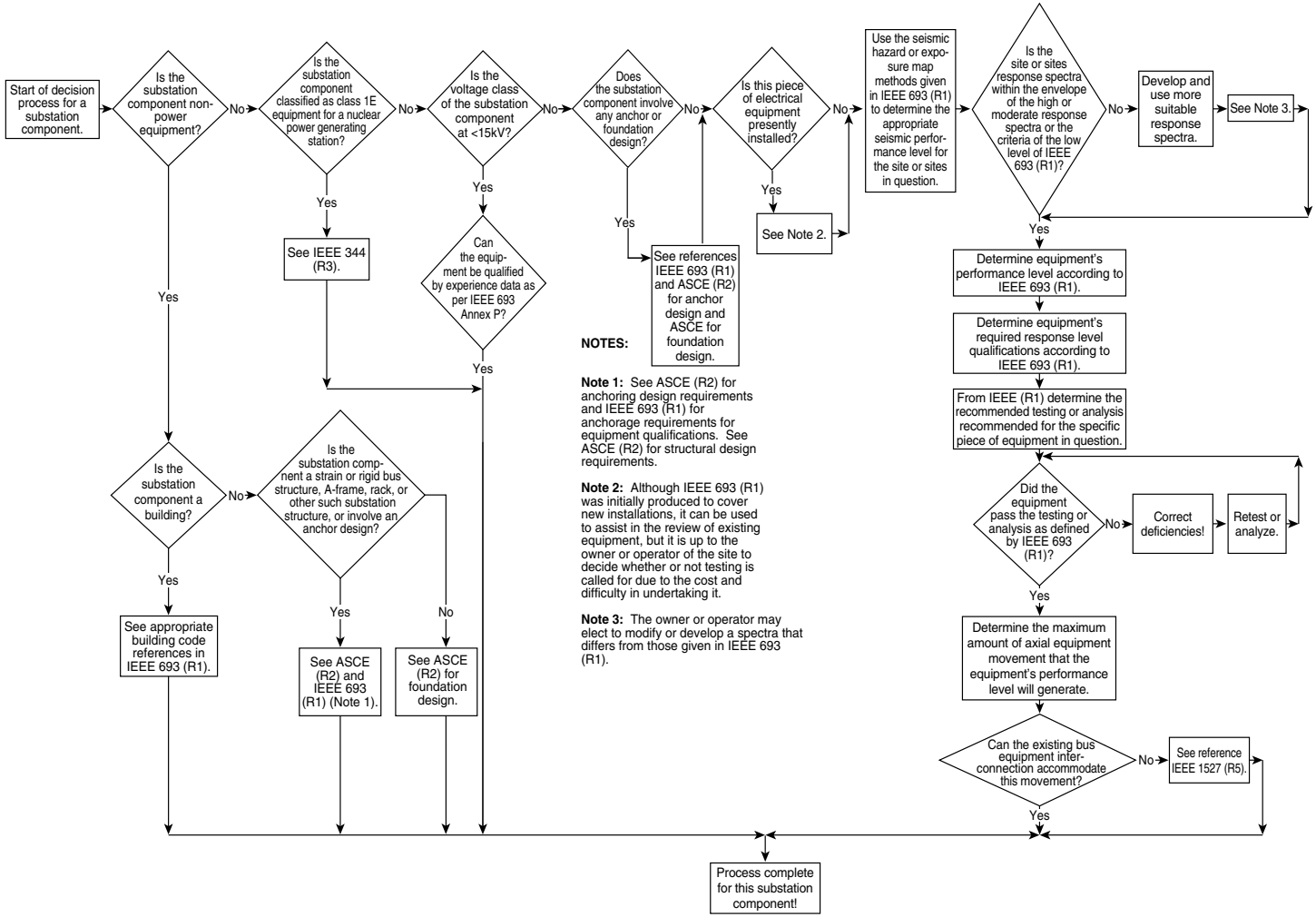

FIGURE 13.1 Decision process for seismic design considerations for substation components.

© 2003 by CRC Press LLC

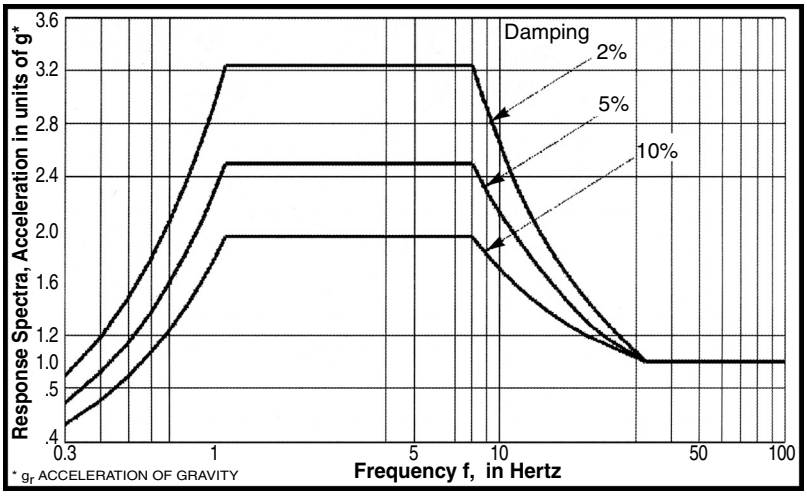

FIGURE 13.2 High seismic performance level (PL).

The performance level and the required response-spectrum shapes bracket the vast majority of substation site conditions. In particular, they provide longer period coverage for soft sites, but sites with very soft soils and sites located on moderate to steep slopes may not be adequately covered by these spectral shapes. Equipment that is shown by this practice to perform acceptably in ground shaking up to the "high seismic performance level" is said to be seismically qualified to the high level. In 2004, this statement will change to: "Equipment that is qualified in accordance with this practice to meet the objective with the 'High' Required Response Spectra (RRS) is said to be seismically qualified to the high seismic level." The high seismic performance level is shown in Figure 13.2 with different damping percentages. In 2004, the high-performance-level figure will be removed from IEEE 693 because its application could be misinterpreted. Also, in 2004, the term "performance level" will be replaced with "projected performance level." This new term better defines the relationship of the RRS and the acceptance criteria. A complete discussion of this issue is outside the scope of this chapter.

Equipment that has demonstrated acceptable performance during a "moderate" event is said to be seismically qualified to the moderate level. In 2004, this statement will change to: "Equipment that is qualified in accordance with this practice to meet the objective with the 'Moderate' RRS is said to be seismically qualified to the moderate seismic level." The moderate seismic performance level is shown in Figure 13.3 with different damping percentages. In 2004, the moderate-performance-level figure will also be removed from IEEE 693.

Finally, equipment that has demonstrated acceptable performance during a "low" event is said to be seismically qualified to the low level. In 2004, this statement will change to: "Equipment that is qualified in accordance with this practice to meet the objective with the 'Low' seismic criteria is said to be seismically qualified to the low seismic level." The low seismic performance level represents the performance that can be expected when good construction practices are used and no special consideration is given to seismic performance. In general, it is expected that the majority of equipment will have acceptable performance at 0.1 *g* or less. The performance level for a site is determined by using either an earthquake hazard map or seismic exposure map for the appropriate part of North America, as specified in IEEE 693. For example, in the U.S., the procedure to select the appropriate seismic qualification level for a site using the earthquake-hazard-map method consists of the following steps:

1. Establish the probabilistic earthquake hazard exposure of the site where the equipment will be placed. Use the site-specific peak ground acceleration developed in a study of the site's seismic hazard, selected at a 2% probability of exceedance in 50 years, modified for site soil conditions.

© 2003 by CRC Press LLC

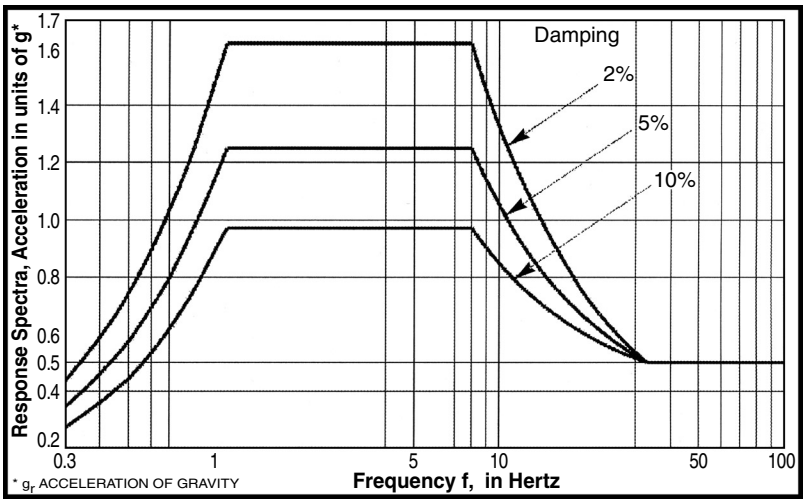

FIGURE 13.3 Moderate seismic performance level (PL).

2. Compare the resulting site-specific peak acceleration value and spectral acceleration with the three seismic performance levels — high, moderate, or low — that best accommodates the expected ground motions. If the peak ground acceleration is less than or equal to 0.1 *g*, the site is classified as low. If the peak ground acceleration is greater than 0.1 *g* but less than or equal to 0.5 *g*, the site is classified as moderate. If the peak ground acceleration is greater than 0.5 *g*, the site is classified as high. This level then specifies the seismic qualification level used for procurement.

When selecting the qualification level based on performance levels, it should be remembered that performance levels represent levels of ruggedness based on testing at lower levels combined with factors of safety for material, or based on analysis combined with experience from previous earthquakes. These performance levels therefore have an inherent degree of uncertainty. For better assurance of structural performance during an earthquake, owners or operators may require that the qualification spectra be increased from low to moderate or from moderate to high to better fit the equipment performance level that they desire. The owners or operators should carefully weigh the benefits of deviating from the criteria specified herein against the added costs.

The earthquake-hazard method is the preferred approach and can be used at any site, but the seismic-exposure-map method can be undertaken utilizing the NEHRP-1997 maps in the U.S. In 2004, the International Building Code (IBC) ground-motion maps can be used in the U.S. The 1995 National Building Code of Canada (NBCC) maps should be used for Canada. The Manual de Disseno de Obras/de la Comision Federal de Electricidad (MDOC/CFE) maps should be used in Mexico. Other countries should use equivalent country-related maps.

To select the appropriate seismic qualification level for a particular service area using the NEHRP maps, the steps outlined below should be followed:

1. Determine the soil classification of the site (A, B, C, D, or E) from section 1615.1.1.
2. Locate the site on the maps (section 1615.1) for the Maximum Considered Earthquake Ground Motion 0.2-sec Spectral Response Acceleration (5% of critical damping).
3. Estimate the site 0.2-sec spectral acceleration, "Ss," from this map.
4. Determine the value of the site "Fa" from Table 1615.1.2(1), as a function of site class and mapped spectral response acceleration at short periods (Ss).
5. Use the peak ground acceleration to select the seismic qualification level. If the peak ground acceleration is less than or equal to 0.1 *g*, the low qualification level should be used. If the peak

© 2003 by CRC Press LLC

is greater than 0.1 *g* but less than or equal to 0.5 *g*, the moderate qualification level should be used. If the peak is greater than 0.5 *g*, the high qualification level should be used. Use of one of the three qualification levels given in this guideline (IEEE 693) and the corresponding required response spectra is encouraged. Use of different utility-specific criteria will likely lead to higher cost and will not meet the intent of this guideline with regard to uniformity.

Similar methods for evaluating seismic qualification methods used in Canada and Mexico are also given in IEEE 693, with appropriate country-specific references and maps as required. Other countries can use a method similar to those described in IEEE 693. Judgment and experience must be exercised when selecting the performance level for seismic qualification, as the site hazard may not fall directly on the high, moderate, or low seismic performance level. In this case, a strategy on accepting more or less risk will be required. It is recommended that large blocks of service areas be dedicated to a single performance level to increase postevent performance consistency and interchangeability and to help reduce costs through bulk purchases. For existing facilities it will mean increased efficiency in any upgrade or repair design work that may be required. Additional operational requirements must also be considered when selecting equipment for an active inventory of an operating utility. The owner/operator must therefore evaluate all of the sites in the service territory and establish a master plan, designating the required (or desired, as the case may be) performance level of each site and prioritizing those sites that need to be upgraded to meet current standards. Likewise, after a site for new electrical equipment has been identified, the owner or operator's agent must determine the appropriate seismic performance level.

If the seismic response spectra for a specific site falls significantly outside of the response spectra indicated in Figure 13.2 and Figure 13.3, then a more appropriate response spectra will have to be developed for use by the owner or operator at that specific site. If the new response spectra falls outside the ones defined in IEEE 693, then the basic procedure laid out in the rest of the decision-making process of Figure 5.80 in IEEE 693 can still be followed. However, the high, moderate, and low levels specified in IEEE 693 should be used without deviation unless it is very clear that one of the performance levels will not adequately represent the site or sites. Note that if the owner or operator elects to modify or develop a spectra that differs from those given, the user will lose the benefits of the standardization. In 2004, the document will specifically state that the user and manufacturer will lose the right to state that the equipment is qualified according to IEEE 693, should the requirements be reduced.

It is often not practical or cost effective to test to the high or moderate performance level because:

1. Test laboratories may not be able to attain these acceleration levels, especially at low frequencies.
2. More importantly, the yield strength of the in-service ductile materials may be considered acceptable at the performance level, and testing to a higher performance level could lead to damage of components, resulting in an unnecessary financial loss.

For these reasons, the equipment should be tested at 50% of the required performance level. For consistency, analysis will also be performed at 50% of the performance level. This reduced level is called the RRS. For the high level, compare Figure 13.2 with Figure 13.4, and for the moderate level, compare Figure 13.3 with Figure 13.5.

The ratio of performance level (PL) to required response spectra (RRS) in this practice is 2.0. This factor is called the performance factor (PF), i.e., the performance factor is PF = PL/RRS. The performance factor does not apply to the low seismic level.

Equipment that is tested or analyzed to the required response spectra is expected to perform acceptably at that performance level. This is achieved by measuring the stresses in the components obtained from the test or from the analysis at the required response spectra and by applying the acceptance requirements list in IEEE 693. For uniformity, in 2004 the "performance level" is being changed to "projected performance level," and the "performance factor" is being changed to the "projected performance factor."

Theoretically, for the reasons stated, components qualified using the moderate or high RRS should be able to withstand ground shaking at the respective performance level. It is cautioned that this approach is dependent upon identifying the locations with the highest stresses within an individual piece of

© 2003 by CRC Press LLC

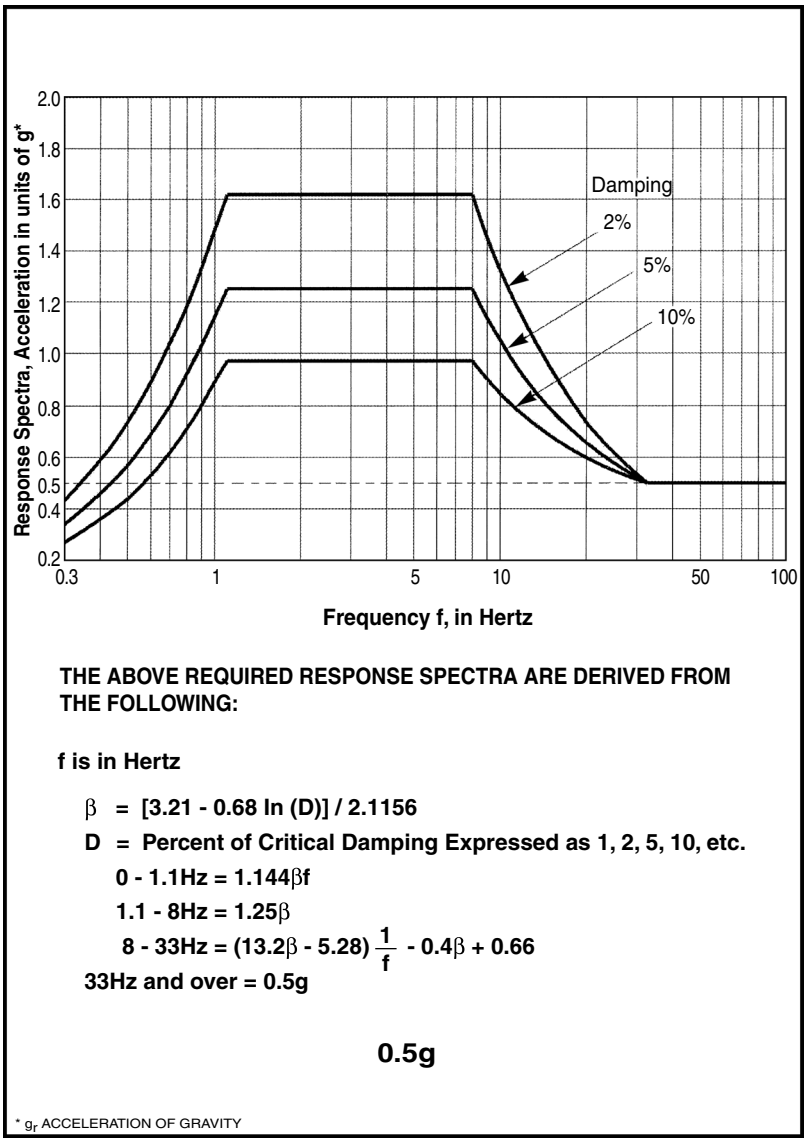

FIGURE 13.4 High required response spectrum (RRS).

equipment, and then monitoring the stresses at these locations during testing or analysis. If the testing or analysis is not carried out in this manner, the critical locations within the equipment may fail prematurely during a seismic event. In addition to these considerations, the response of the equipment to the dynamic load may change between the required response spectra and the performance level. If this is not anticipated, premature failures may occur.

The above discussion pertains to the structural performance of the equipment. Qualification by analysis provides no assurance of electrical function. Shake-table testing provides assurance for only those electrical functions verified by electrical testing and only to the required response spectra level, not to the performance level. Shake-table testing may be required for equipment that in previous years was qualified by dynamic analysis but performed poorly during past earthquakes. However, static or static-coefficient analysis may still be specified when past seismic performance of equipment qualified by such methods has led to acceptable performance.

© 2003 by CRC Press LLC

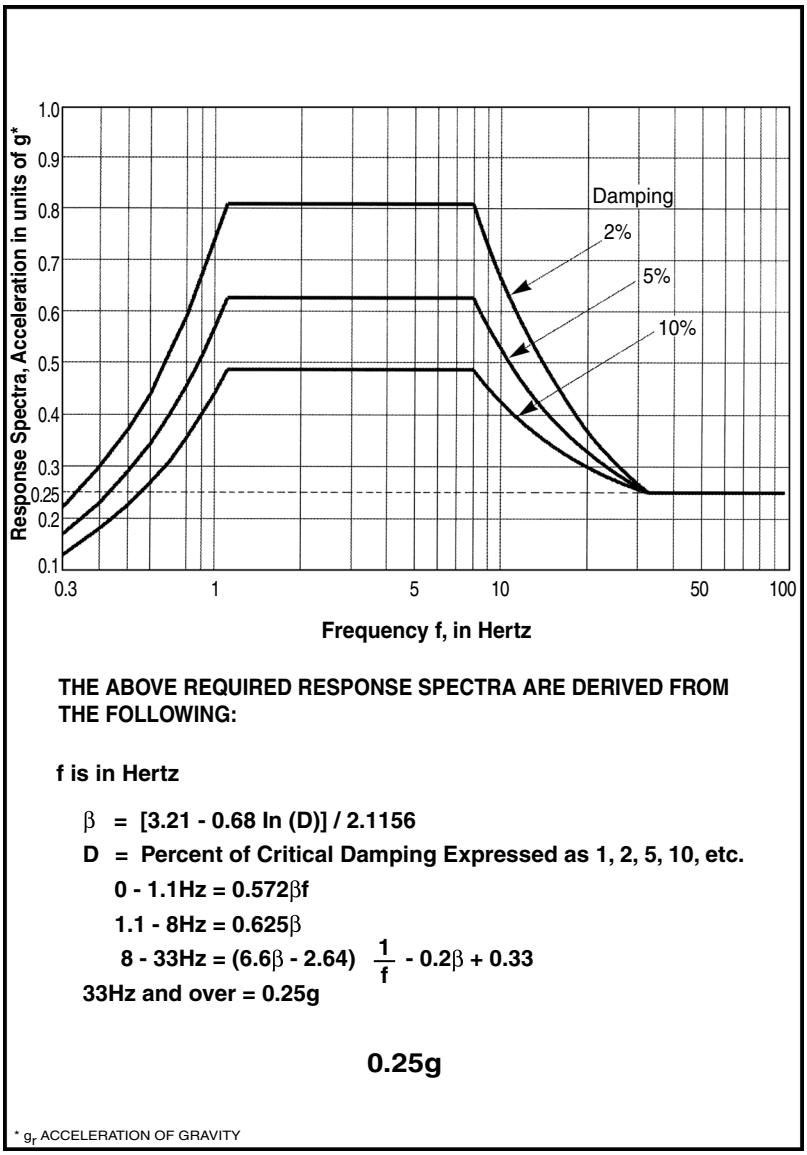

FIGURE 13.5 Moderate required response spectrum (RRS).

13.6.2 High and Moderate Levels

The high and moderate required response spectra are given in Figure 13.4 and Figure 13.5, respectively. The required spectral shape for the response spectra is the same as that used in the performance, except at 50% of the performance level. The equations for the respective spectra are listed in Figure 13.4 and Figure 13.5.

13.6.3 Low Level

A rigorous seismic qualification, such as that required to meet the high and moderate performance levels, is not required for equipment qualified to the low performance level. That is, no required response spectrum or seismic report is required. However, the following criteria should be met:

© 2003 by CRC Press LLC

1. Anchorage for the low seismic performance level shall be capable of withstanding at least 0.2 times the equipment weight applied in one horizontal direction, combined with 0.16 times the weight applied in the vertical direction at the center of gravity of the equipment and support. The resultant load should be combined with the maximum normal operating load and dead load to develop the greatest stress on the anchorage. The anchorage should be designed using the requirements specified in IEEE 693 and the ASCE guide.
2. The equipment and its support structure should have a well-defined load path. The determination of the load path should be established so that it describes the transfer of loads generated by, or transmitted to, the equipment from the point of origin of the load to the anchorage of the supplied equipment. Among the forces that should be considered are seismic (simultaneous triaxial loading — two horizontal and one vertical), gravitational, and normal operating loads. The load path should not include:
   - Sacrificial collapse members
   - Materials that will undergo nonelastic deformations, unrestrained translation, or rotational degrees of freedom
   - Solely friction-dependent restraint (control-energy-dissipating devices excepted)

13.7 Qualification Process

Once the performance level has been established, the testing or analysis as required in the IEEE 693 document must be undertaken. For example, to qualify a 138,000-V circuit breaker to meet the moderate seismic qualification level, the following criteria, as specified in IEEE 693, must be successfully demonstrated:

1. The seismic-withstand capability must be demonstrated by performing a dynamic analysis, and the analyzed equipment should include the control cabinet, stored energy sources, and the associated current transformer, assuming this equipment is on the same support structure.
2. The circuit breaker and the supporting structure must be designed so that there will be no damage during and following the seismic event.
3. The response spectrum shown in Figure 13.5 should be used in the analysis.

The IEEE 693 document also provides guidance on the following for this piece of equipment:

1. General requirements for dynamic analysis
2. General and detailed qualification procedures required
3. Criteria for establishing when the qualification is considered acceptable
4. Equipment and support design
5. A report analysis checklist
6. Information on how to include base isolation and other damping systems in the analysis
7. Recommendations on what seismic information should be listed on the equipment identification plate

This IEEE 693 document also contains similar material for nearly all other substation components.

Because of the way IEEE 693 is written, the information that the users must provide in their tendering specifications is minimal. A few paragraphs are usually all that are necessary, as the controlling language is contained in IEEE 693. Therefore, it is strongly suggested that rather than copying information from the IEEE 693 document into the user's specifications, that the user refer to the document in its entirety. This eliminates the possibility of a misunderstanding between the owner and the manufacturer. Also, if the document is not specified in its entirety, then the user and manufacturer should not claim that the equipment is in compliance with IEEE 693.

© 2003 by CRC Press LLC

Based on the results of the testing and analysis undertaken, corrective measures can be carried out to seismically upgrade the power equipment in question. The maximum amount of equipment displacement is also determined from these tests or from dynamic analysis.

The final step of the decision process for the power equipment stream is to determine the flexible bus interconnection required for the piece of equipment. IEEE 693 provides guidance in determining the minimum length of flexible bus, while IEEE 1527 [6], which is still in a draft form, will provide a more detailed design procedure to follow. The basic decision-making process for substation components that are classified as power equipment is now complete.

References

1. Institute of Electrical and Electronics Engineers, IEEE Recommended Practice for Seismic Design of Substations, IEEE Std. 693-1997, IEEE, Piscataway, NJ, 1997.
2. American Society of Civil Engineers, Substation Structure Design Guide, ASCE, Reston, VA, 2004.
3. Institute of Electrical and Electronics Engineers, IEEE Recommended Practice for Seismic Qualifications of Class 1E Equipment for Nuclear Power Generating Stations, IEEE Std. 344-1987 (reaffirmed in 1993), IEEE, Piscataway, NJ, 1993.
4. Federal Emergency Management Agency, Recommended Provision for Seismic Regulations for New Building, NEHRP-1997 (National Earthquake Hazards Reduction Program), FEMA, Washington, DC, 1997.
5. ICC (International Code Council, Inc.) Birmingham, AL, ICB (International Conference of Building Officials), Whittier, CA, and BOCAI (Building Officials and Code Administrators International, Inc.) Country Club Hills, IL, 2003.
6. Institute of Electrical and Electronics Engineers, IEEE Recommended Practice for the Design of Flexible Buswork Located in Seismically Active Areas, IEEE Std. P1527 (draft), IEEE, Piscataway, NJ, 2005.

© 2003 by CRC Press LLC

14

Substation Fire Protection[1]

14.1 Fire Hazards 14-1
Substation Hazards • Switchyard Hazards • Control and Relay Building Hazards • Indoor Station Hazards

14.2 Fire Protection Measures 14-4
Life Safety • Passive Fire Protection • Active Fire Protection • Manual Fire Protection

14.3 Fire Protection Selection 14-5
Life-Safety Measures • Investment Considerations • Example of a Risk-Based Economic Analysis

14.4 Conclusion 14-7

References 14-7

Substation Control Building Fire-Protection-Review Checklist 14-8
Risk Assessment

Substation Switchyard Fire Protection Assessment Process 14-9
Risk Assessment • Radiant Exposure Assessment • Fire Spread Assessment

Don Delcourt
BC Hydro

The risk of fire in substations has been historically low, but the possible impacts of a fire can be catastrophic. Fires in substations can severely impact the supply of power to customers and the utility company's revenue and assets. These fires can also create a fire hazard to utility personnel, emergency personnel, and the general public. The recognition of the fire hazards, the risks involved, and the appropriate fire-protection mitigation measures are some of the key considerations for the design and operation of new or existing substations.

This chapter provides an overview to help substation designers identify fire hazards within a substation, identify appropriate fire protection measures, and evaluate the benefit of incorporating these measures. It is only an overview and is not intended to be all-inclusive or to provide all the necessary details to carry out a project. For further details and information on this topic, it is recommended that the designer refer to IEEE 979 [1].

14.1 Fire Hazards

14.1.1 Substation Hazards

The physical objects or conditions that create latent (undeveloped) demands for fire protection are called hazards. Every fire hazard has the following attributes:

[1]Some material in this chapter from Delcourt, D., Substation fire protection in *The Electric Power Engineering Handbook,* Grigsby, L.L., Ed., CRC Press, Boca Raton, FL, 2001.

0-8493-1703-7/03/$0.00+$1.50

© 2003 by CRC Press LLC

© 2003 by CRC Press LLC

TABLE 14.1 Types and Origins of Substation Fires as Reported by a Major Utility, 1971–1994

Types and Origins of Fires	Percentages
Oil-insulated circuit breakers	14.0
Current transformers	14.0
Power transformers	9.3
Hot work procedures (welding, cutting, and grinding)	9.3
Potential transformers	7.8
Engine-driven generators	7.0
Arson	6.3
Smoking	6.0
Lightning	4.7
Flammable liquid storage or handling	3.1
Terrorism	1.6
Miscellaneous fires	15.8

Source: BC Hydro.

A probability that a fire will actually occur during a specified time interval
The magnitude of a possible fire
The consequence of the potential loss

One of the key steps in the design of new substations and the assessment of existing substations is to identify conditions that are fire hazards. Once the fire hazards of a planned or existing substation are identified, then fire protection measures can be incorporated to eliminate or lessen the fire hazard.

There are a wide range of types and causes of the fires that can occur in substations. The types of fires depend on the equipment and systems used in the stations. Fires involving dc valves, outdoor or indoor oil-insulated equipment, oil-insulated cable, hydrogen-cooled synchronous condensers, or PCB-insulated equipment are usually well documented, and these types of equipment are easily recognized as a fire hazard. There are a number of other substation-specific types of fires that are not as well documented. IEEE 979, "Guide for Substation Fire Protection;" Factory Mutual 'Data Sheets'; NFPA 851, "Recommended Practice for Fire Protection for Electric Generating Plants and Current Converter Stations" [2]; and CIGRE TF 14.01.04, "Report on Fire Aspects of HVDC Valves and Valve Halls" [3] — provide guidance on other types of fire hazards and fire protection. Also, the Edison Electric Institute's 'Suggested Guidelines for Completing a Fire Hazards Analysis for Electric Utility Facilities (Existing or in Design)' 1981 [4] provides reference guidelines for the fire-hazard analysis process.

Energized electrical cables with combustible insulation and jacketing can be a major hazard because they are a combination of fuel supply and ignition source. A cable failure can result in sufficient heat to ignite the cable insulation, which could continue to burn and produce high heat and large quantities of toxic smoke. Oil-insulated cables are an even greater hazard, since the oil increases the fuel load and spill potential.

The hazard created by mineral-oil-insulated equipment such as transformers, reactors, and circuit breakers is that the oil is a significant fuel supply that can be ignited by an electrical failure within the equipment. Infiltration of water, failure of core insulation, exterior fault currents, and tap-changer failures are some of the causes of internal arcing within the mineral insulating oil that can result in fire. This arcing can produce breakdown gases such as acetylene and hydrogen. Depending on the type of failure and its severity, the gases can build up sufficient pressure to cause the external shell of the transformer tank or ceramic bushings to fail or rupture. Once the tank or bushing fails, there is a strong likelihood that a fire or explosion will occur. A possible explosion could cause blast damage. The resulting oil-spill fire could spread to form a large pool of fire, depending on the volume of oil, spill containment, slope of the surrounding area, and the type of the surrounding ground cover (i.e., gravel or soil). Thermal radiation and convective heating from the oil spill fire can also damage surrounding structures and structures above the fire area.

© 2003 by CRC Press LLC

Substations are exposed to the common industrial fire hazards such as the use and storage of flammable compressed gases, hot work, storage and handling of flammable liquid, refuse storage, presence of heating equipment, and storage of dangerous goods. The local fire codes or NFPA codes can provide assistance in recognizing common fire hazards.

A study was carried on the substation fires reported by a major utility for the period from 1971 to 1994. Table 14.1 shows the types and origins of fires and the percentage for each category. The "miscellaneous fires" category covers a wide range of fires from grass fires to a plastic wall clock failing and catching fire. It is impossible to predict all of the different types of fires that can occur.

14.1.2 Switchyard Hazards

Some of the specific components encountered in substation switchyards that are fire hazards are:

- Oil-insulated transformers and breakers
- Oil-insulated potheads
- Hydrogen-cooled synchronous condensers
- Gasoline storage or dispensing facilities
- Vegetation
- Combustible service building
- Storage of pesticides or dangerous goods
- Storage warehouses
- Standby diesel-generator buildings

The failure of some of the critical components such as transformers and breakers can directly result in losses of revenue or assets. Other switchyard components could create a fire exposure hazard to critical operational components (i.e., combustible service buildings located close to bus support structures or transmission lines). For additional information, see the checklist for the switchyard fire-protection assessment process at the end of this chapter.

14.1.3 Control- and Relay-Building Hazards

A control or relay building can include the following potential hazards:

- Exposed combustible construction
- Combustible finishes
- Emergency generators, shops, offices, and other noncritical facilities in the control buildings
- Batteries and charger systems
- Switchyard cable openings that have not been fire-stopped
- Adjacent oil-insulated transformers and breakers
- High-voltage equipment
- Dry transformers
- Workshops

A fire in any of these components could damage or destroy critical control or protection equipment. Damages could result in a long outage to customers as well as significant revenue losses.

14.1.4 Indoor Station Hazards

Fires in indoor stations are caused by some of the same substation-related hazards as switchyards and control rooms. The impacts of any fires involving oil-insulated equipment, oil-insulated cable, and HVDC (high-voltage dc) valves in an indoor station can result in major fires, with accompanying large asset losses and service disruptions. The basic problems with major fires in indoor stations is that the building will contain the blast pressure, heat, and smoke, and which can result in:

© 2003 by CRC Press LLC

- Blast damage to the building structure (structural failure)
- Thermal damage to the building structure (structural failure)
- Smoke damage to other equipment (corrosion damage)

14.2 Fire Protection Measures

The measures to mitigate or lessen fire hazards are normally called "fire protection measures." The National Fire Protection Association standards and local building fire codes set the standards for application and design of fire protection. The types of measures can be broken down as follows:

- Life safety
- Passive fire protection
- Active fire protection
- Manual fire protection

14.2.1 Life Safety

Life safety measures generally include the fire protection measures required under the building, fire, or life safety codes. The main objective of these codes is to ensure that:

- The occupants are able to leave the station without being subject to hazardous or untenable conditions (thermal exposure, carbon monoxide, carbon dioxide, soot, and other gases).
- Firefighters are safely able to effect a rescue and prevent the spread of fire.
- Building collapse does not endanger people (including firefighters) who are likely to be in or near the building.

To meet these objectives, fire safety systems provide the following performance elements:

- Detect a fire at its earliest stage.
- Signal the building occupants and/or the fire department of a fire.
- Provide adequate illumination to an exit.
- Provide illuminated exit signs.
- Provide fire-separated exits within reasonable travel distances from all areas of a building. These exits shall terminate at the exterior of the building.
- Provide fire separations between building floors and high-hazard rooms to prevent the spread of fire.
- Provide passive protection to structural components to prevent their failure due to fire exposure.

14.2.2 Passive Fire Protection

Passive measures are static measures that are designed to control the spread of fire and withstand the effects of fire. These measures are the most frequently used methods of protecting life and property in buildings from a fire. This protection confines a fire to a limited area or ensures that the structure remains sound for a designated period of fire exposure. Its popularity is based on the reliability of this type of protection, since it does not require human intervention or equipment operation. Common types of passive protection include fire-stopping, fire separations, equipment spacing, use of noncombustible construction materials, use of low-flame-spread/low-smoke-development rated materials, substation grading, provision of crushed rock around oil-filled equipment, etc.

The degree of passive protection for a building structure would be based on the occupancy of the area and the required structural integrity. The structural integrity of a building is critical in order to preserve life and property. The premature structural failure of a building before the occupants can evacuate or the fire department can suppress the fire is a major concern. Building and electrical codes will provide some of the criteria for structural fire resistance.

IEEE 979 includes recommendations on these measures relative to substation design.

© 2003 by CRC Press LLC

14.2.3 Active Fire Protection

Active fire protection measures are automatic fire protection measures that warn occupants of the existence of fire and extinguish or control the fire. These measures are designed to automatically extinguish or control a fire at an earliest stage without risking life or sacrificing property. The benefits of these systems have been universally identified and accepted by building and insurance authorities. Insurance companies have found significant reduction in losses when automatic suppression systems have been installed.

An automatic suppression system consists of an extinguishing agent supply, control valves, a delivery system, and fire detection and control equipment. The agent supply may be virtually unlimited (such as with a city water supply for a sprinkler system) or of limited quantity (such as with a water tank supply for a sprinkler system). Typical examples of agent control valves are deluge valves, sprinkler valves, and halon control valves. The agent delivery systems are a configuration of piping, nozzles, or generators that apply the agent in a suitable form and quantity to the hazard area (e.g., sprinkler piping and heads). Fire detection and control equipment can be either mechanical or electrical in operation. These systems can incorporate a fire detection means such as sprinkler heads, or they can use a separate fire detection system as part of their operation. These active fire protection systems detect a fire condition, signal its occurrence, and activate the delivery system. Active systems include wet, dry, and pre-action sprinklers, deluge systems, foam systems, and gaseous systems.

Detailed descriptions of each of these systems, code references, and recommendations on application are covered in IEEE 979.

14.2.4 Manual Fire Protection

Manual measures include items such as the various types of fire extinguishers, fire hydrants, hose stations, etc. requiring active participation by staff or the fire department to detect, control, and extinguish a fire. Portable fire equipment is provided for extinguishing incipient-stage fires by building occupants. Since the majority of fires start small, it is an advantage to extinguish them during their incipient stage to ensure that potential losses are minimized.

Detailed descriptions of each of these systems, code references, and recommendations on application are covered in IEEE 979.

14.3 Fire Protection Selection

Fire protection measures can be subdivided into life-safety and investment categories.

14.3.1 Life-Safety Measures

Life-safety measures are considered to be mandatory by fire codes, building codes, or safety codes. As such, the codes mandate specific types of fire protection, with very little flexibility in their selection.

14.3.2 Investment Considerations

Investment-related fire protection is provided to protect assets, conserve revenue, and help maintain service to customers. This type of fire protection is not commonly mandated by legislation but is driven by economic reasons such as asset losses, revenue losses, and the possible loss of customers. Therefore, there is considerable flexibility in the fire risks that are mitigated, the fire protection measures used, whether the risk is offset by purchasing insurance, or whether the risk of a loss is absorbed as a cost of doing business.

The selection of investment-related fire protection can be done based on company policies and standards, insurance engineering recommendations, industry practices, specific codes and standards (IEEE 977 and NFPA 850), or by risk-based economic analysis.

The risk-based economic analysis is the evaluation of the investment measures in relation to the probability of fire, the potential losses due to fire, and the cost of the fire protection measures. This

© 2003 by CRC Press LLC

TABLE 14.2 Probability of Fire for Various Transformer Voltages

Transformer Voltage	Annual Fire Frequency
69 kV	0.00034 fires/year
115–180 kV	0.00025 fires/year
230–350 kV	0.0006 fires/year
500 kV	0.0009 fires/year

Source: IEEE 979, *Guide for Substation Fire Protection.* With permission.

analysis requires a reasonable database of the probability of fires for the different hazard areas or types, an assessment of the effectiveness of the proposed fire protection measures, an estimate of the fire loss costs, and a fair degree of engineering judgment. The potential losses usually include the equipment loss as well as an assessment of the lost revenue due to the outage resulting from the loss of equipment.

One of the most common risk-based economic analysis types is a benefit/cost analysis. This analysis is calculated using the following equation:

$$\text{benefit / cost ratio} = \frac{\text{annual frequency of fire} \times \text{fire loss costs (assets + revenue)}}{\text{cost of fire protection} \times (1/\text{effectiveness of fire protection measure})}$$

Normally, this ratio should be greater than one and preferably greater than two. A benefit/cost ratio of two means that the benefit (avoided fire loss costs) is twice the cost of the fire protection. Therefore it is a good investment.

One of the greatest difficulties is to estimate the frequency of fire for the specific hazards. Some companies have extensive fire loss histories and loss databases. These databases can be used to estimate specific fire frequencies, but the results may be poor due to the small statistical sample size based on the company's records. There are a number of other databases and reports that are in the public domain that provide useful data (i.e., NFPA data shop, EPRI Fire Induced Vulnerability Evaluation Methodology, and IEEE 979 Transformer Fire Survey). Table 14.2 shows the estimated probability of fire from the IEEE 979 Transformer Fire Survey.

Once the potential financial loss due to a fire has been calculated, the designer should input costs and effectiveness of any proposed fire protection measure into the benefit/cost equation and determine the B/C ratio. If the B/C ratio is less than one, provision of the fire protection measure is not an acceptable investment.

14.3.3 Example of a Risk-Based Economic Analysis

The following is a simplified example of an analysis:

- A substation has four 138-kV single-phase oil-insulated transformers. One of these transformers is a spare and is located remote from the others. The load supplied by these transformers is 25 MW. A water-spray deluge system is being considered to suppress or control a fire in the transformers. The deluge system is expected to protect the adjacent transformers, but not save the transformer that catches fire. The estimated cost of a deluge system for all three transformers is $60,000. The individual transformers have a replacement value of $300,000.
- The utility's chief financial officer questions whether this is a good investment.
- The company uses a discount rate of 10% and requires that all investments have a benefit/cost ratio greater than two. The assigned value of energy is $25/MW. The standard amortization period is 25 years.
- The annual frequency of fire for a single 138-kV transformer is estimated as 0.00025 fires/year. Therefore, the combined frequency for the three transformers is 0.00075 fires/year.

© 2003 by CRC Press LLC

- The estimated effectiveness of the deluge system protecting the adjacent transformers is 0.9. The deluge system will not save the transformer in which the fire originates; it is assumed to be a total loss.
- The fire is assumed to originate in the center transformer in the bank of three single-phase transformers. It is assumed that in the absence of suppression, the fire will spread to destroy the two adjacent transformers. The spare transformer is not affected because it is remote from the other transformers.
- The estimated station outage period for this scenario is the difference between the outage time to replace all three transformers (a fire in the center transformer could destroy all three transformers) and the outage time to replace the center transformer (assuming the deluge system will protect the adjacent transformers). The outage time to replace a single unit is five days and to replace three units is 40 days. Therefore, the expected outage loss period is 35 days.
- The expected lost revenue is 35 days × 24 h/day × 25 MW/h × \$25/MW = \$525,000.
- The estimated annual revenue and equipment loss costs = (composite annual fire frequency) × (revenue loss for the station outage period + replacement value of the adjacent transformers) = (0.00075 fires/year) × [\$525,000 + (2 × \$300,000)] = \$843.75/year.
- The net present value of the annual revenue and equipment losses for the 25-year amortization period at a discount rate of 10% = \$7659.
- The benefit/cost ratio = \$7659/[\$60,000 × (1.0/0.9)] = 0.115.
- Example conclusion: The calculated benefit/cost ratio of 0.115 is considerably less than the minimum required ratio of two. The proposal to install deluge protection should be rejected, since it is not economical. Other fire protection measures could be considered, or the risk could be transferred by purchasing insurance to cover the possible loss of the assets (transformers) and the revenue. These other measures can also be analyzed using this methodology for economic risk analysis.

It should be noted that the above example does not include societal costs, loss of reputation, and possible litigation.

14.4 Conclusion

The assessment of the hazards involved with an existing or planned substation and the selection of the most appropriate fire protection are the best ways to ensure that the power supply to customers, company revenue, and company assets are protected from fire. Substation, switchyard, and control-building fire-protection-review checklists are presented at the end of this chapter to aid in the assessment process. The IEEE Guide for Substation Fire Protection, Std. 979, provides an excellent guide to the assessment process.

References

1. Institute of Electrical and Electronics Engineers, IEEE Guide for Substation Fire Protection, IEEE Std. 979-1994, IEEE, Piscataway, NJ, 1994.
2. National Fire Protection Association, Recommended Practice for Fire Protection for Electric Generating Plants and Current Converter Stations, NFPA 851, NFPA, Boston, 1996.
3. CIGRE, Report on Fire Aspects of HVDC Valves and Valve Halls, TF 14.01.04, CIGRE, Paris, 1992.
4. Edison Electric Institute, Suggested Guidelines for Completing a Fire Hazards Analysis for Electric Utility Facilities (Existing or in Design), Edison Electric Institute, Washington, D.C., 1981.

© 2003 by CRC Press LLC

Substation Control Building Fire-Protection-Review Checklist

Risk Assessment

- Review the criticality of the control room and building fire loss to the substation operation and asset base
- Review the historical frequency of fire in control buildings

Life-Safety Assessment

- Review the control-room layout to ensure that the room has a minimum of two outward swinging exit doors
- Ensure that the travel distance from any area within the control building to an exit does not exceed 100 ft
- Ensure that exit signs are installed at each exit door
- Review that emergency lighting is provided that will provide a minimum lighting level of 10 lx at the floor, along the exit paths
- Review the size and number of stories of the building to ensure proper exits are provided such that maximum travel distances to the exits do not exceed 100 ft
- Determine if there are any building- or fire-code requirements for the installation of a fire detection system

Fire Protection Assessment

- Review the availability of a fire department response to the site
- Review the availability of fire-fighting water supply at or adjacent to the site
- Review the adequacy of any existing control-building fire protection
- Review criticality of control-building equipment, hazards involved, and response time of station personnel and the fire department
- Determine the type of detection that will provide an acceptable very early detection (air sampling detection) to detect a fire at a very early stage (small electronic component failure, arcing) or at an early stage with smoke detection (photoelectric detection) to detect a fire at a smoldering or small flame stage
- Determine the type of fire suppression system that will provide an acceptable level of equipment losses and outages (i.e., gaseous suppression systems to suppress a fire at an early stage [component loss] or sprinkler protection to suppress a fire at the stage where the loss would be restricted to a single control cabinet)
- Review the occupied hours of the building and the ability of site personnel to safely extinguish a fire with portable fire equipment
- Determine the levels of portable fire equipment required by the local fire code and that equipment is suitable for safe staff operation

Hazard Assessment

- Review the other uses (shops, offices, storage, etc.) within the control building and their exposure to the critical substation equipment
- Review the use of combustible construction in the control building (i.e., exterior surfaces and roofs)
- Review the use of combustible interior surface finishes in the control room and ensure that the surface finishes have a flame spread rating of less than 25

© 2003 by CRC Press LLC

- Review the combustibility of any exposed cable used in the building to ensure that it meets the requirements of IEEE 383
- Review the control-room separation walls to other occupancies to ensure that the walls have a fire resistance rating of a minimum of 1 h

Substation Switchyard Fire Protection Assessment Process

Risk Assessment

- Determine the initial electric equipment layout and equipment types
- Review the criticality of the various pieces of equipment
- Review types of insulating fluid used and their flammability
- Review the historical frequency of fire for the various types of equipment
- Review the availability of a fire department response to the site
- Review the availability of a fire-fighting water supply at or adjacent to the site
- Review the adequacy of any existing substation fire protection

Radiant Exposure Assessment

- Review the spacing between individual single-phase transformers and breakers with IEEE 979 Table 1
- Review the spacing between large three-phase transformers, banks of single-phase transformers, or groups of breakers with IEEE 979 Table 1
- Review the spacing of oil-filled equipment with respect to substation buildings with IEEE 979 Table 2. Note that the presence of combustible surfaces and unprotected windows on exposed surfaces of the buildings may require detailed thermal radiation calculations or the application of safety factors to the table distances. The Society of Fire Protection Engineers publication Engineering Guide for Assessing Flame Radiation to External Targets from Pool Fires can be used as a reference for detailed thermal radiation calculations.
- Review the distances between oil-filled equipment and the property line. Note that combustible vegetation and building structures beyond the property line of the substation may be exposed to high enough heat fluxes to ignite combustible surfaces. Detailed thermal radiation calculations should be considered.
- Review the use of the various methods of fire protection discussed in IEEE 979 that will address the hazard determined in the radiant-exposure assessment, such as changing the type of equipment and insulating fluid used, increased spacing, provision of gravel ground cover, oil containment, fire barriers, and automatic water-deluge fire protection

Fire Spread Assessment

- Is the surface around oil-filled equipment pervious (gravel) or impervious? Use of 12-in.-thick gravel ground covers will suppress the flames from a burning oil-spill fire. Impervious surfaces can allow the burning oil to form a large pool fire, which will increase the heat flux to adjacent equipment and structures.
- Is there any oil containment in place around the oil-filled equipment? Oil containment can contain pool fires and prevent their spread.
- Does the grade surrounding the oil-filled equipment slope toward the equipment or away from the oil-filled equipment toward adjacent oil-filled equipment, cable trenches, drainage facilities,

© 2003 by CRC Press LLC

or buildings? The burning oil released from ruptured oil-filled equipment can spread for significant distances if the ground surrounding the equipment has a slope greater than 1%.

- Review the use of the various methods of fire protection discussed in IEEE 979 that will address the hazard determined in the fire spread assessment. These methods include the following:
  - Changing the type of equipment and insulating fluid used
  - Increasing the spacing of gravel ground cover
  - Provision of oil containment
  - Changing the grade surrounding the equipment
  - Use of liquid-tight noncombustible cable trench cover adjacent to oil-filled equipment
  - Fire-stopping of cable-trench entries into control buildings
  - Use of automatic water-deluge fire protection

© 2003 by CRC Press LLC

15

Substation Communications

15.1 Introduction 15-1
15.2 Supervisory Control and Data Acquisition (SCADA) Historical Perspective 15-2
15.3 SCADA Functional Requirements 15-4
15.4 SCADA Communication Requirements 15-4
15.5 Components of a SCADA System 15-5
15.6 SCADA Communication Protocols: Past, Present, and Future 15-6
General Considerations • DNP • IEC 870-5 • UCA 1.0 • ICCP • UCA 2.0 • IEC 61850 • Continuing Work
15.7 The Structure of a SCADA Communications Protocol 15-9
15.8 Security for Substation Communications 15-11
General Considerations • SCADA Security Attacks • Security by Obscurity • SCADA Message Data Integrity Checking • Encryption • Denial of Service
15.9 Electromagnetic Environment 15-14
15.10 Communications Media 15-15
ARDIS (Advanced Radio Data Information Service) • Cellular Telephone Data Services • Digital Microwave • Fiber Optics • Hybrid Fiber Coax • ISDN • Digital Subscriber Loop (DSL) • Telephone Lines: Leased and Dial-Up • MAS Radio • Mobile Computing Infrastructure • Mobile Radio • Mobitex Packet Radio • Paging Systems • Power-Line Carrier • Satellite Systems • Short Message System (SMS) • Spread-Spectrum Radio and Wireless LANs • T1 and Fractional T1
15.11 Additional Information 15-22
Useful Web Sites • Relevant Standards

Daniel E. Nordell
Consulting Engineer

15.1 Introduction

Modern electric power systems have been dubbed "the largest machine made by mankind" because they are both physically large – literally thousands of miles in dimension – and operate in precise synchronism. In North America, for example, the entire West Coast, everything east of the Rocky Mountains, and the state of Texas operate as three autonomous interconnected "machines." The task of keeping such a large machine functioning without breaking itself apart is not trivial. The fact that power systems work as reliably as they do is a tribute to the level of sophistication that is built into them. Substation communication plays a vital role in power system operation. This chapter provides a brief historical overview of substation communication, followed by sections that:

0-8493-1703-7/03/$0.00+$1.50

© 2003 by CRC Press LLC

© 2003 by CRC Press LLC

- Review functional and communication requirements
- Examine the components of both traditional and emerging supervisory control and data acquisition (SCADA) systems
- Review the characteristics of past, present, and future substation communication protocols
- Review the role of standards for substation communication
- Discuss the electromagnetic environment that substation communication devices must withstand
- Discuss security aspects of substation communications
- Discuss communication media options for substation communications

15.2 Supervisory Control and Data Acquisition (SCADA) Historical Perspective

Electric power systems as we know them began developing in the early 20th century. Initially, generating plants were associated only with local loads that typically consisted of lighting and electric transportation. If anything in the system failed — generating plant, power lines, or connections — the lights would quite literally be "out." Customers had not yet learned to depend on electricity being nearly 100% reliable, so outages, whether routine or emergency, were taken as a matter of course.

As reliance on electric power grew, so did the need to find ways to improve reliability. Generating stations and power lines were interconnected to provide redundancy, and higher voltages were used for longer distance transportation of electricity. Points where power lines came together or where voltages were transformed came to be known as "substations." Substations often employed protective devices to allow system failures to be isolated so that faults would not bring down the entire system, and operating personnel were often stationed at these important points in the electrical system so that they could monitor and quickly respond to any problems that might arise. They would communicate with central system dispatchers by any means available — often by telephone — to keep them apprised of the condition of the system. Such "manned" substations were normative throughout the first half of the 20th century.

As the demands for reliable electric power became greater and as labor became a more significant part of the cost of providing electric power, technologies known as "supervisory control and data acquisition," or SCADA for short, were developed to allow remote monitoring and even control of key system parameters. SCADA systems began to reduce and even eliminate the need for personnel to be on-hand at substations.

Early SCADA systems provided remote indication and control of substation parameters using technology borrowed from automatic telephone switching systems. As early as 1932, Automatic Electric was advertising "remote-control" products based on its successful line of "Strowger" telephone switching apparatus (Figure 15.1). Another example (used as late as the 1960s) was an early Westinghouse REDAC system that used telephone-type electromechanical relay equipment at both ends of a conventional twisted-pair telephone circuit. Data rates on these early systems were slow. Data were sent in the same manner as rotary-dial telephone commands at 10 bps, so only a limited amount of information could be passed using this technology.

Early SCADA systems were built on the notion of replicating remote controls, lamps, and analog indications at the functional equivalent of pushbuttons, often placed on a mapboard for easy operator interface. The SCADA masters simply replicated, point for point, control circuits connected to the remote (slave) unit.

During the same time frame as SCADA systems were developing, a second technology — remote teleprinting, or "Teletype" — was coming of age, and by the 1960s had gone through several generations of development. The invention of a second device — the "modem" (MOdulator/DEModulator) — allowed digital information to be sent over wire pairs that had been engineered to only carry the electronic equivalent of human voice communication. With the introduction of digital electronics it was possible to use faster data streams to provide remote indication and control of system parameters. This marriage

© 2003 by CRC Press LLC

If It's "Remote-Control" Strowger Products Will Do It

Whether "remote" means spanning a thousand miles or is measured in inches—

Whether "control" has to do with far-flung power distribution networks or counting oranges rolling into boxes—

Strowger Products—relays, selecting switches and other parts in almost endless variety—can help you solve your problem.

For more than 40 years Strowger Products have been doing just such things. During four decades they have been tried—tested—proved.

Today they stand pre-eminent for permanence of adjustment, long life, excellence of material, finished craftsmanship.

Economy, too, recommends Strowger apparatus. Expert production, incorporating every refinement suggested by long experience, insures a uniform product—at low unit cost.

Our Sales Engineering Division has served many engineers, technicians and inventors. It stands ready to offer you its experience in applying Strowger Products to a wide range of remote control uses. We invite you to consult it. Address American Automatic Electric Sales Company, 1033 W. Van Buren Street, Chicago.

Above is typical "remote-control" equipment using Strowger Products

Strowger Products are made by

AUTOMATIC ELECTRIC COMPANY

SALES AND SERVICE OFFICES

NEW YORK · PHILADELPHIA · BOSTON · PITTSBURGH · WASHINGTON, D. C. · CLEVELAND
CINCINNATI · ATLANTA · DETROIT · ST. PAUL · KANSAS CITY, MO. · LOS ANGELES

Through our affiliated factories in England and Belgium we can serve you across plants with identical equipment economically and promptly

FIGURE 15.1 Electrical World advertisement, October 31, 1932.

of Teletype technology with digital electronics gave birth to remote terminal units (RTUs), which were typically built with discrete solid-state electronics and could provide remote indication and control of both discrete events and analog voltage and current quantities.

Beginning also in the late 1960s and early 1970s, technology leaders began exploring the use of small computers (minicomputers at that time) in substations to provide advanced functional and communication capability. But early application of computers in electric substations met with industry resistance because of perceived and real reliability issues.

The introduction of the microprocessor with the Intel 4004 in 1971 (see http://www.intel4004.com for a fascinating history) opened the door for increasing sophistication in RTU design that is still continuing today. Traditional point-oriented RTUs that reported discrete events and analog quantities could be built in a fraction of the physical size required by previous discrete designs. More intelligence could be introduced into the device to increase its functionality. For the first time RTUs could be built to report quantities in engineering units rather than as raw binary values. One early design developed at Northern States Power Company in 1972 used the Intel 4004 as the basis for a standardized environmental data acquisition and retrieval (SEDAR) system that collected, logged, and reported environmental information in engineering units using only 4 kilobytes of program memory and 512 nibbles (half-bytes) of data memory.

While the microprocessor offered the potential for greatly increased functionality at lower cost, the industry also demanded very high reliability and long service life measured in decades, conditions that were difficult to achieve with early devices. Thus the industry was slow to accept the use of microprocessor technology in mission-critical applications. By the late 1970s and early 1980s, integrated microprocessor-based devices were introduced, and these came to be known as intelligent electronic devices, or IEDs.

© 2003 by CRC Press LLC

Early IEDs simply replicated the functionality of their predecessors — remotely reporting and controlling contact closures and analog quantities using proprietary communication protocols. Increasingly, IEDs are also being used to convert data into engineering unit values in the field and to participate in field-based local control algorithms. Many IEDs are being built with programmable logic controller (PLC) capability and, indeed, PLCs are being used as RTUs and IEDs to the point that the distinction between these different types of smart field devices is rapidly blurring.

Early SCADA communication protocols were usually proprietary and were also often kept secret from the industry. A trend beginning in the mid-1980s has been to minimize the number of proprietary communication practices and to drive field practices toward open, standards-based specifications. Two noteworthy pieces of work in this respect are the International Electrotechnical Commission (IEC) 870-5 family of standards and the IEC 61850 standard. The IEC 870-5 work represents the pinnacle of the traditional point-list-oriented SCADA protocols, while the IEC 61850 standard is the first of an emerging approach to networkable, object-oriented SCADA protocols based on work started in the mid-1980s by the Electric Power Research Institute (EPRI) that became known as the Utility Communication Architecture (UCA).

15.3 SCADA Functional Requirements

Design of any system should always be preceded by a formal determination of the business and corresponding technical requirements that drive the design. Such a formal statement is known as a "functional requirements specification." Functional requirements capture the intended behavior of the system. This behavior can be expressed as services, tasks, or functions the system is required to perform.

In the case of SCADA, the specification contains such information as system status points to be monitored, desired control points, and analog quantities to be monitored. It also includes identification of acceptable delays between when an event happens and when it is reported, required precision for analog quantities, and acceptable reliability levels. The functional-requirements analysis will also include a determination of the number of remote points to be monitored and controlled. It should also include identification of communication stakeholders other than the control center, such as maintenance engineers and system planners who may need communication with the substation for reasons other than real-time operating functionality.

The functional-requirements analysis should also include a formal recognition of the physical, electrical, communications, and security environment in which the communications are expected to operate. Considerations here include recognizing the possible (likely) existence of electromagnetic interference from nearby power systems, identifying available communications facilities, identifying functionally the locations between which communications are expected to take place, and identifying potential communication security threats to the system.

It is sometimes difficult to identify all of the items to be included in the functional requirements. A technique that has been found useful in the industry is to construct a number of example "use cases" that detail particular individual sets of requirements. Aggregate use cases can form a basis for a more formal collection of requirements.

15.4 SCADA Communication Requirements

After the functional requirements have been articulated, the corresponding architectural design for the communication system can be set forth. Communication requirements include those elements that must be considered in order to meet the functional requirements. Some elements of the communication requirements include:

- Identification of communication traffic flows — source, destination, quantity
- Overall system topology, e.g., star, mesh
- Identification of end-system locations

© 2003 by CRC Press LLC

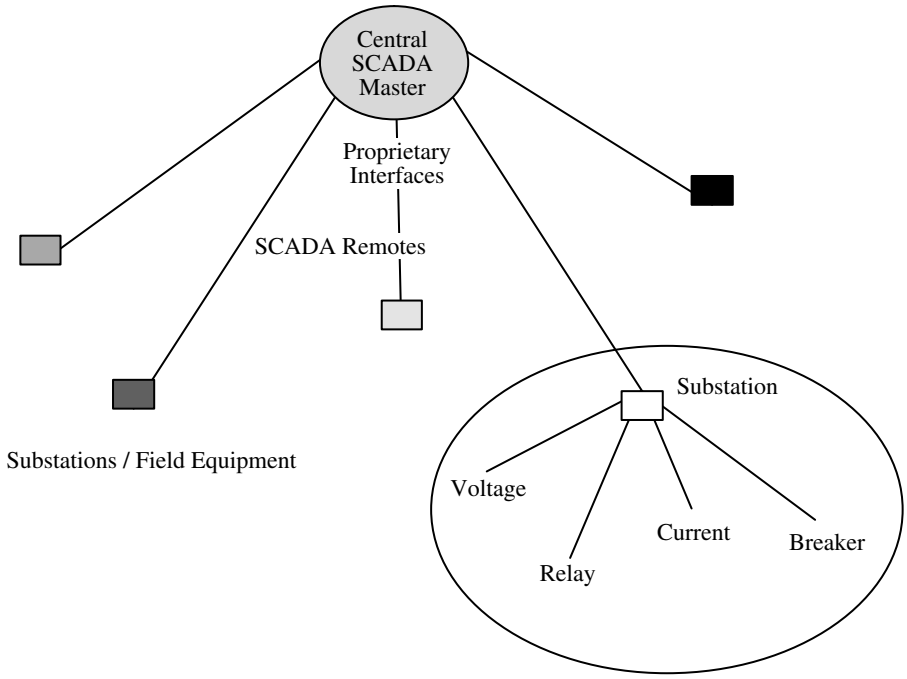

FIGURE 15.2 Traditional SCADA system topology.

- Device and processor capabilities
- Communication session, dialog characteristics
- Device addressing schemes
- Communication network traffic characteristics
- Performance requirements
- Timing issues
- Reliability, backup, failover
- Application service requirements
- Application data formats
- Operational requirements (directory, security, and management of the network)
- Quantification of electromagnetic-interference-withstand requirements

15.5 Components of a SCADA System

Traditional SCADA systems grew up with the notion of a SCADA master and a SCADA slave (remote). The implicit topology was that of a "star" or "spoke and hub," with the master in charge. In the historical context, the master was a hardwired device with the functional equivalent of indicator lamps and pushbuttons (Figure 15.2).

Modern SCADA systems employ a computerized SCADA master in which the remote information is either displayed on an operator's computer terminal or made available to a larger energy management system (EMS) through networked connections. The substation RTU is either hardwired to digital, analog, and control points, or it frequently acts as a sub-master or data concentrator in which connections to intelligent devices inside the substation are made using communication links. Most interfaces in these systems are proprietary, although in recent years standards-based communication protocols to the RTUs have become popular. In these systems, if other stakeholders such as engineers or system planners need

© 2003 by CRC Press LLC

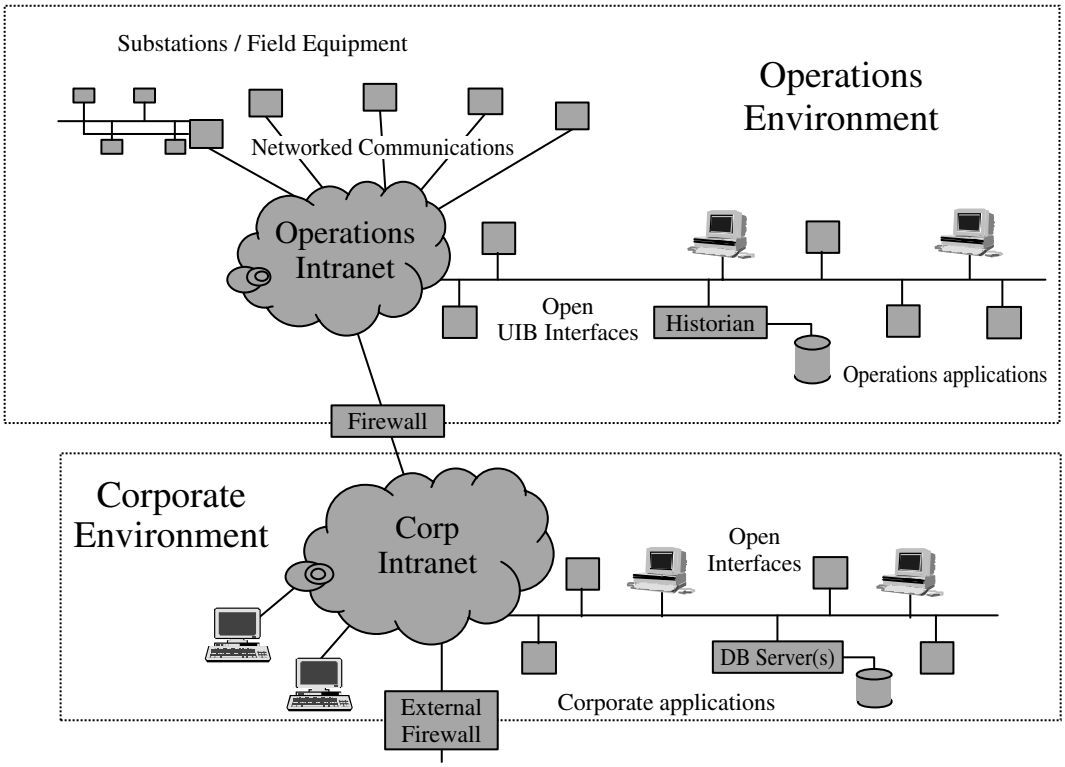

FIGURE 15.3 Networked SCADA communications.

access to the substation for configuration or diagnostic information, then separate (often ad hoc) provision is usually made using technologies such as dial-up telephone circuits.

With the introduction of networkable communication protocols, typified by the IEC 61850 series of standards, it is now possible to simultaneously support communication with multiple clients located at multiple remote locations. Figure 15.3 shows how such a network might look. This configuration will support clients located at multiple sites simultaneously accessing substation devices for applications as diverse as SCADA, device administration, system fault analysis, metering, and system load studies.

SCADA systems, as traditionally conceived, report only real-time information. Figure 15.3 shows another function that can be included in a modern SCADA system: that of an historian which time-tags each change of state of selected status parameters or each change (beyond a chosen deadband) of analog parameters and then stores this information in an efficient data store that can be used to rebuild the system state at any selected time for system performance analyses.

15.6 SCADA Communication Protocols: Past, Present, and Future

15.6.1 General Considerations

As noted in the section on SCADA history, early SCADA protocols were built on electromechanical telephone switching technology. Signaling was usually done using pulsed direct-current signals at a data rate on the order of 10 pulses per second. Analog information could be sent using current loops that could provide constant current independent of circuit impedance while also communicating over large distances (thousands of feet) without loss of signal quality. Control and status points were indexed using

© 2003 by CRC Press LLC

FIGURE 15.4 The standards process.

assigned positions in the pulse train. Communications security was assured by means of repetition of commands or such mechanisms as "arm" and "execute" for control.

With the advent of digital communications (still precomputer), higher data rates were possible. Analog values could be sent in digital form using analog-to-digital converters, and errors could be detected using parity bits and block checksums. Control and status points were assigned positions in the data blocks, which then needed to be synchronized between the remote and master devices. Changes of status were detected by means of repetitive "scans" of remote devices, with the scan rate being a critical system design factor. Communications integrity was assured by the use of more sophisticated block ciphers, including the cyclical redundancy check, which could detect both single- and multiple-bit errors in communications. Control integrity was ensured by the use of end-to-end select-check-operate procedures. The manufacturers (and sometimes the users) of these early SCADA systems would typically define their own communication protocol, and the industry became known for the large number of competing practices.

Computer-based SCADA master stations, followed by microprocessor-based remote terminal units, continued the traditions set by the early systems of using points-list-based representations of control and status information. Newer, still proprietary, communication protocols became increasingly sophisticated in the types of control and status information that could be passed. The notion of "report by exception" was introduced, in which a remote terminal could report "no change" in response to a master-station poll, thus conserving communication resources and reducing average poll times.

By the early 1980s, the electric utility industry enjoyed the marketplace confusion brought on by approximately 100 competing proprietary SCADA protocols and their variants. With the rising understanding of the value of building on open practices, a number of groups began to approach the task of bringing standard practices to bear on utility SCADA practices.

As shown in Figure 15.4, a number of different groups are often involved in the process of reaching consensus on standard practices. The process reads from the bottom to the top, with the "international standards" level the most sought-after and also often the most difficult to achieve. The process typically starts with practices that have proved to be useful in the marketplace but are, at least initially, defined and controlled by a particular vendor or, sometimes, end user. The list of vendor-specific SCADA protocols is long and usually references particular vendors. One such list (from a vendor's list of supported protocols) reads like a "who's who" of SCADA protocols and includes: Conitel, CDC Type 1 and Type II, Harris 5000, Modicon MODBus, PG&E 2179, PMS-91, QUICS IV, SES-92, TeleGyr 8979, PSE Quad 4 Meter, Cooper 2179, JEM 1, Quantum Qdip, Schweitzer Relay Protocol (221, 251, 351), and Transdata Mark V Meter.

Groups at the Institute of Electrical and Electronics Engineers (IEEE), the International Electrotechnical Commission (IEC), and the Electric Power Research Institute (EPRI) all started in the mid-1980s

© 2003 by CRC Press LLC

to look at the problem of the proliferation of SCADA protocols. IEC Technical Committee 57 (IEC TC57) Working Group 3 (WG 3) began work on its 870-series of telecontrol standards. Groups within the IEEE Substations and Relay Committees began examining the need for consensus for SCADA protocols. EPRI began a project that became known as the Utility Communications Architecture, an effort to specify an enterprise-wide, networkable, communications architecture that would serve business applications, control centers, power plants, substations, distribution systems, transmission systems, and metering systems.

15.6.2 DNP

With the IEC work partially completed, a North American manufacturer adapted the IEC 870-5-3 and 870-5-4 draft documents plus additional North American requirements to draft a new DNP (distributed network protocol), which was released to the DNP Users Group (www.dnp.org) in November 1993. DNP3 was subsequently selected as a recommended practice by the IEEE C.2 Task Force for an RTU-to-IED communications protocol (IEEE Std. 1379-1997, IEEE Trial-Use Recommended Practice for Data Communications between Intelligent Electronic Devices and Remote Terminal Units in a Substation). DNP has enjoyed considerable success in the marketplace and represents the pinnacle of traditional points-list-oriented SCADA protocols.

15.6.3 IEC 870-5

The IEC TC57 WG3 continued work on its telecontrol protocol and has issued several standards in the IEC 60870-5 series (www.iec.ch) that collectively define an international consensus standard for telecontrol. IEC 870-5 has recently issued a new transport profile (104) that can be used over wide-area networks. Profile 870-5 represents the best international consensus for traditional control-center-to-substation telecommunication and, as noted above, is closely related to the North American DNP protocol.

15.6.4 UCA 1.0

The EPRI UCA project published its initial results in December 1991, as seen in the UCA timeline in Figure 15.5. The UCA 1.0 specification outlines a communication architecture based on existing international standards. It specifies the use of the Manufacturing Message Specification (MMS: ISO 9506) in the application layer for substation communications.

15.6.5 ICCP

The UCA 1.0 work became the basis for IEC 60870-6-503 (2002-04), entitled "Telecontrol equipment and systems — Part 6-503: Telecontrol protocols compatible with ISO standards and ITU-T recommendations — TASE.2 Services and protocol." Also known as ICCP (Intercontrol Center Communications Protocol), this specification calls for the use of MMS and was designed to provide standardized communication services between control centers, but it has also been used to provide communication services between a control center and its associated substations.

15.6.6 UCA 2.0

Continuing work to develop the substation and IED communication portions of UCA was conducted in the MMS Forum beginning in 1992. This work resulted in the issuance of a UCA 2.0 report that was published as IEEE Technical Report 1550-1999 EPRI/UCA Utility Communications Architecture (UCA), Version 2.0, 1999, IEEE Product No. SS1117-TBR, IEEE Standard No: TR 1550-1999 (www.ieee.org) in November 1999.

15.6.7 IEC 61850

IEEE TR1550 became the basis for the new generation of IEC 61850 standards for communication with substation devices. The feature that distinguishes UCA and its IEC 61850 successor from traditional

© 2003 by CRC Press LLC

UCA Timeline

- **1986 (Dec): EPRI Workshop**
- **1987 (Dec): Assessment**
- **1988 (Dec): Projects**
- **1991 (Dec): UCA Documents Published by EPRI**
- **1992 May: MMS Forum Begins**
- **1993: Demonstration Projects Started**
- **1994: ICCP released**
- **UCA 2.0 demo projects include:**
  - "AEP Initiative" - Substation LAN
  - City Public Service Distribution Automation
- **1997: UCA 2.0 completed**
- **1998: IEEE SCC36 formed**
- **1998: IEC TC57 61850 standards started**
- **1999: IEEE TR1550 published**
- **2002: IEC 61850 nearing completion**

FIGURE 15.5 UCA timeline.

SCADA protocols is that they are both networkable and object-oriented, which makes it possible for a device to describe its attributes when asked. This capability allows the possibility of self-discovery and "pick-list" configuration of SCADA systems rather than the labor-intensive and more error-prone points-list systems associated with earlier SCADA protocols.

15.6.8 Continuing Work

Work is continuing in IEC TC57 WG13 and WG14 to define object-oriented presentation of real-time operations information to the business enterprise environment using best networking practices. TC57 has also recently commissioned a new Working Group 15 to evaluate and recommend security practices for the IEC protocols.

15.7 The Structure of a SCADA Communications Protocol

The fundamental task of a SCADA communications protocol is to transport a "payload" of information (both digital and analog) from the substation to the control center and to allow remote control of selected substation operating parameters from the control center. Other functions that are required but usually not included in traditional SCADA protocols include the ability to access and download detailed event files and oscillography and the ability to remotely access substation devices for administrative purposes. These functions are often provided using ancillary dial-up telephone-based communication channels. Newer, networkable, communication practices such as IEC 61850 make provision for all of the above functionality and more using a single wide-area-network connection to the substation.

From a communications perspective, all communication protocols have at their core a "payload" of information that is to be transported. That payload is then wrapped in either a simple addressing and error-detection envelope and sent over a communication channel (traditional protocols), or it is wrapped in additional layers of application layer and networking protocols that allow transport over wide area networks (routable object-oriented protocols like IEC 61850).

© 2003 by CRC Press LLC

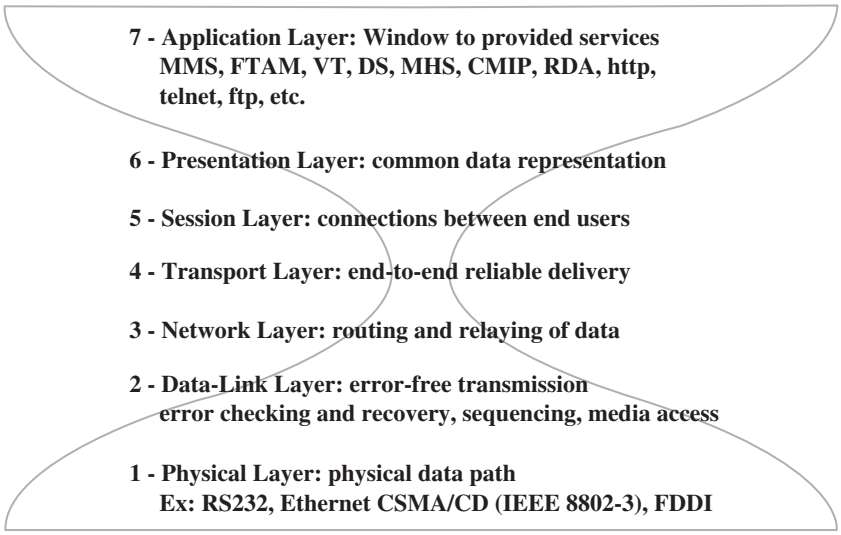

FIGURE 15.6 OSI reference model.

In order to help bring clarity to the several parts of protocol functionality, in 1984 the International Standards Organization (ISO) issued Standard ISO/IEC 7498 entitled Open Systems Interconnection — Basic Reference Model or, simply, the OSI reference model. The model was updated with a 1994 issue date, with the current reference being ISO/IEC 7498-1:1994, and available on-line at http://www.iso.org.

The OSI reference model breaks the communication task into seven logical pieces, as shown in Figure 15.6. All communication links have a data source (application layer 7 information) and a physical path (layer 1). Most links also have a data-link layer (layer 2) to provide message integrity protection. Security can be applied at layers 1 or 2 if networking is not required, but it must be applied at or above the network layer (3) and is often applied at the application layer (layer 7) to allow packets to be routed through a network. More sophisticated, networkable protocols add one or more of layers 3 to 6 to provide networking, session management, and sometimes data format conversion services. Note that the OSI reference model is not, in and of itself, a communication standard. It is just a useful *model* showing the functionality that might be included in a coordinated set of communication standards.

Also note that Figure 15.6 shows a superimposed "hourglass." The hourglass represents the fact that it is possible to transport the same information over multiple physical (lower) layers — radio, fiber, twisted pair, etc. — and that it is possible to use a multiplicity of application (upper) layers for different functions. The neck of the hourglass represents the fact that in the networking (middle) layers of the protocol stack, interoperability can be achieved only if all applications agree on (a small number of) common network routing protocols. For example, the growing common use of the Internet protocols TCP/IP represents a worldwide agreement to use common networking practices (common middle layers — TCP/IP) to route messages of multiple types (application layer) over multiple physical media (physical layer — twisted pair, Ethernet, fiber, radio) in order to achieve interoperability over a common network (the Internet).

Figure 15.7 shows how device information is encapsulated (starting at the top of the diagram) in each of the lower layers in order to finally form the data packet at the data-link layer that is sent over the physical medium. The encapsulating packet — the header and trailer and each layer's payload — provides the added functionality at each level of the model, including routing information and message integrity protection. Typically, the overhead requirements added by these wrappers are small compared with the size of the device information being transported. Figure 15.8 shows how a message can travel through multiple intermediate systems when networking protocols are used.

Traditional SCADA protocols, including all of the proprietary legacy protocols, DNP, and IEC 870-5-101, use layers 1, 2, and 7 of the reference model in order to minimize overheads imposed by the

© 2003 by CRC Press LLC

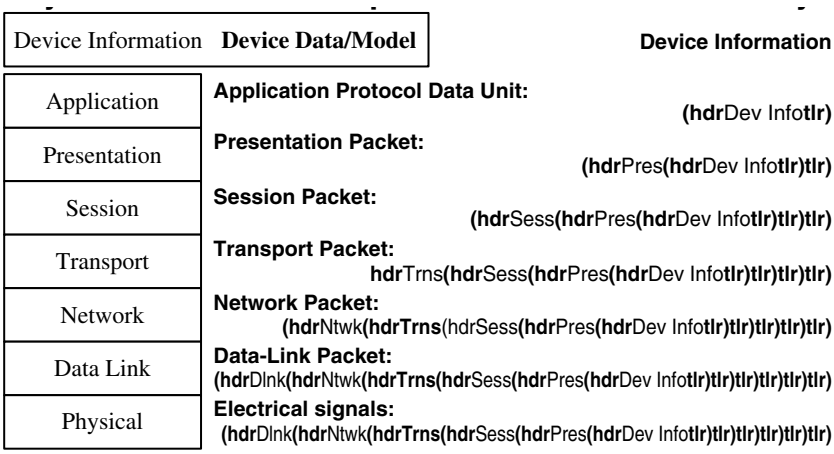

FIGURE 15.7 Layered message structure.

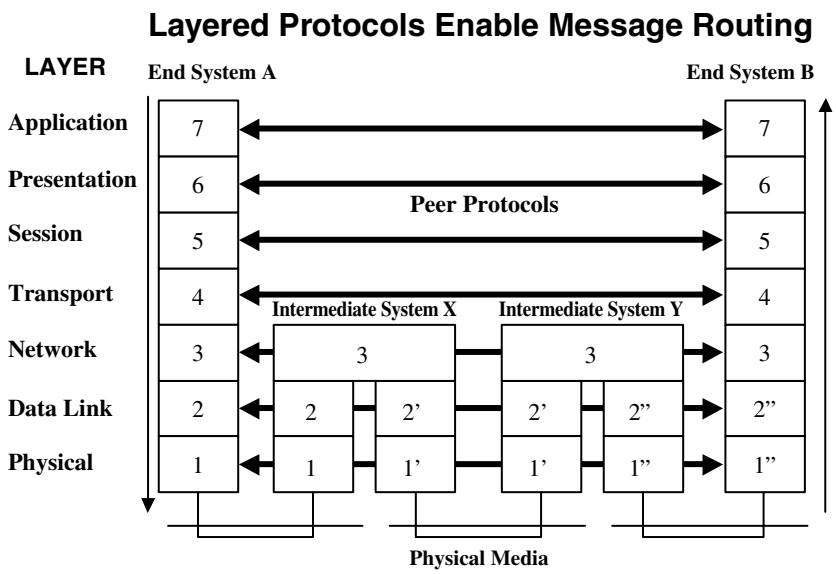

FIGURE 15.8 End-to-end messaging in OSI model.

intermediate layers. IEC 870-5-104 and recent work being done with DNP add networking and transport information (layers 3 and 4) so that these protocols can be routed over a wide-area network. IEC 61850 is built using a "profile" of other standards at each of the reference model layers so that it is applicable to a variety of physical media (lower layers), is routable (middle layers), and provides mature application-layer services based on ISO 9506, the Manufacturing Message Specification (MMS).

15.8 Security for Substation Communications

15.8.1 General Considerations

Until recently the term "security," when applied to SCADA communication systems, meant only the process of ensuring message integrity in the face of electrical noise and other disturbances to the

© 2003 by CRC Press LLC

communications. But, in fact, "security" also has a much broader meaning, as discussed in depth in Chapters 16 and 17. Security, in the broader sense, is concerned with anything that threatens to interfere with the integrity of the business. Our focus here will be to examine issues related more narrowly to SCADA security.

In an earlier section we discussed the role of the OSI reference model (ISO 7498-1) in defining a communications architecture. In similar fashion, ISO 7498-2, Information Processing Systems, Open Systems Interconnection, Basic Reference Model — Part 2: Security Architecture, issued in 1989, provides a general description of security services and related mechanisms that fit into the reference model, and it defines the positions within the reference model where they can be provided. It also provides useful standard definitions for security terms.

ISO 7498-2 defines the following five categories of security service:

1. Authentication: the corroboration that an entity is the one claimed
2. Access control: the prevention of unauthorized use of a resource
3. Data confidentiality: the property that information is not made available or disclosed to unauthorized individuals, entities, or processes
4. Data integrity: the property that data has not been altered or destroyed in an unauthorized manner
5. Nonrepudiation: data appended to, or a cryptographic transformation of, a data unit that allows a recipient of the data unit to prove the source and integrity of the unit and protect against forgery, e.g., by the recipient

Note that ISO 7498-2 provides standard definitions and an *architecture* for security services but leaves it to other standards to define the details of such services. It also provides recommendations on where the requisite security services should fit in the seven-layer reference model in order to achieve successful, secure interoperability between open systems.

Security functions can generally be provided alternatively at more than one layer of the OSI model. Communication channels that are strictly point-to-point — and for which no externally visible device addresses need to be observable — can employ encryption and other security techniques at the physical and data-link layers. If the packets need to be routable, messages either need to be encrypted at or above the network layer (the OSI recommendation), or the security wrapper needs to be applied and removed at each node of the interconnected network. This is a bad idea because of the resultant complexities of security key management and the resultant probability of security leaks.

15.8.2 SCADA Security Attacks

A number of types of security challenges to which SCADA systems may be vulnerable are recognized in the industry. The list includes:

- Authorization violation: an authorized user performing functions beyond his level of authority
- Eavesdropping: gleaning unauthorized information by listening to unprotected communications
- Information leakage: authorized users sharing information with unauthorized parties
- Intercept/alter: an attacker inserting himself (either logically or physically) into a data connection and then intercepting and modifying messages for his own purposes
- Masquerade ("spoofing"): an intruder pretending to be an authorized entity and thereby gaining access to a system
- Replay: an intruder recording a legitimate message and replaying it back at an inopportune time. An often-quoted example is recording the radio transmission used to activate public safety warning sirens during a test transmission and then replaying the message sometime later. An attack of this type does not require more than very rudimentary understanding of the communication protocol.
- Denial of service attack: an intruder attacking a system by consuming a critical system resource such that legitimate users are never or infrequently serviced

© 2003 by CRC Press LLC

15.8.3 Security by Obscurity

The electric utility industry frequently believes that the multiplicity and obscurity of its SCADA communication protocols make them immune to malicious interference. While this argument may have some (small) merit, it is not considered a valid assumption when security is required. An often-quoted axiom states that "security by obscurity is no security at all." In the same way that the operation of door locks is well understood but the particular key is kept private on a key ring, it is better to have well-documented and tested approaches to security in which there is broad understanding of the mechanisms but in which the keys themselves are kept private.

15.8.4 SCADA Message Data Integrity Checking

Early SCADA protocols based on telephone switching technology did not have message integrity checking built into the protocols. Incoming (status) information integrity was not considered mission-critical on a per-message basis, and errors would be corrected in the course of repeat transmissions. Control message integrity was provided by redundant messages and by select-check-operate sequences built into the operation.

Traditional packet-based SCADA protocols provide message integrity checking at the data-link layer through the use of various check-sum or cyclic redundancy check (CRC) codes applied to each data packet. These codes can detect single- and many multiple-bit errors in the transmission of the data packet and are extremely useful for detecting errors caused by electrical noise and other transmission errors. The selection of the particular frame-checking algorithm has been the subject of a great deal of study in the development of the several existing SCADA protocols. Usually the frame-check sequence is applied once to the entire packet. In the case of IEC 870-5 and DNP, however, a CRC is applied to both the header of a message and every 16 octets within the message in order to ensure message integrity in the face of potentially noisy communication channels.

The OSI reference model prescribes data-link integrity checking as a function to be provided by the link layer (layer 2). Thus all protocols built on this model (e.g., IEC 61850) will have CRC-based frame-check sequences built into their lower layers, although they may not be optimized for performance in very noisy communication channels, as is the case with the IEC 870-5 family of protocols. Since the link-layer integrity checks discussed above do not include encryption technology and they use well-documented algorithms, they provide protection only against inadvertent packet corruption caused by hardware or data channel failures. They do not provide, nor do they attempt to provide, encryption that can protect against malicious interference with data flow.

15.8.5 Encryption

Security techniques discussed in this section are effective against several of the attacks discussed above, including eavesdropping, intercept/alter, and masquerade ("spoofing"). They can also be effective against replay if they are designed with a key that changes based upon some independent entity such as packet sequence number or time.

The OSI reference model separates the function of data-link integrity checking (checking for transmission errors) from the function of protecting against malicious attacks to the message contents. Protection from transmission errors is best done as close to the physical medium as possible (data-link layer), while protection from message content alteration is best done as close to the application layer as possible (network layer or above). An example of this approach is the IP Security Protocol (ipsec), which is inserted at the IP (Internet Protocol) level in the protocol stack of an Internet-type network.

For those instances where packet routing is not required, it is possible to combine error checking and encryption in the physical or data-link layer. Commercial products are being built to intercept the data stream at the physical (or sometimes data link) layer, add encryption and error detection to the message, and send it to a matching unit at the other end of the physical connection, where it is unwrapped and

© 2003 by CRC Press LLC

passed to the end terminal equipment. This approach is particularly useful in those situations where it is required to add information security to existing legacy systems. If such devices are employed in a network where message addressing must be visible, they must be intelligent enough to encrypt only the message payload while keeping the address information in the clear.

For systems in which the packets must be routed through a wide-area network, the addition of a physical-layer device that does not recognize the packet structure is unusable. In this case, it is more appropriate to employ network-layer or above security protection to the message. This can be accomplished using either proprietary (e.g., many virtual-private-network schemes) or standards-based (e.g., the IP Security Protocol [ipsec]) protection schemes that operate at the network layer or above in the OSI model.

15.8.6 Denial of Service

Denial-of-service attacks are attacks in which an intruder consumes a critical system resource, with the result that legitimate users are denied service. This can happen on a wide-area network by flooding the network with packets or requests for service, on a telephone network by simultaneously going "off-hook" with a large number of telephone sets, or on a radio network by jamming the frequency used by radio modems. Defense against such attacks varies depending on the type of communication facility being protected.

Denial of service is usually not an issue on networks that are physically isolated. The exception is defending against system failures that might arise under peak load conditions or when system components fail.

Defense against denial-of-service attacks in an interconnected wide-area network is difficult and can only be accomplished using techniques such as packet traffic management and quality-of-service controls in routers. Denial of service during normal system peak loading is a consideration that must be addressed when the system is designed.

Defense on a telephone system might include managing quality of service by giving preferential dial tone to critical users while denying peak-load service to ordinary users.

Defense on a radio system might include the use of spread-spectrum techniques that are designed to be robust in the face of co-channel interference.

15.9 Electromagnetic Environment

The electromagnetic environment in which substation communication systems are asked to operate is very unfriendly to wired communication technologies. It is not unusual to expose communication circuits to several thousands of volts during system faults or switching as a result of electromagnetic induction between high-voltage power apparatus and both internal and external (e.g., telephone) communication facilities. IEEE Std. 487-2000 states:

> Wire-line telecommunication facilities serving electric supply locations often require special high-voltage protection against the effects of fault-produced ground potential rise or induced voltages, or both. Some of the telecommunication services are used for control and protective relaying purposes and may be called upon to perform critical operations at times of power system faults. This presents a major challenge in the design and protection of the telecommunication system because power system faults can result in the introduction of interfering voltages and currents into the telecommunication circuit at the very time when the circuit is most urgently required to perform its function. Even when critical services are not involved, special high-voltage protection may be required for both personnel safety and plant protection at times of power system faults. Effective protection of any wire-line telecommunication circuit requires coordinated protection on all circuits provided over the same telecommunication cable.

Tools that can be used to respond to this challenge include the use of isolation and neutralizing transformers for metallic telephone circuits, protection (and qualification testing) of connections to communication apparatus, and proper shielding and grounding of wired circuits. The use of fiber-optic

© 2003 by CRC Press LLC

communication systems for both local networking (e.g., fiber Ethernet) and for telecommunication circuits is also a valuable tool for use in hazardous electromagnetic environments.

IEEE and IEC standards that have been issued to deal with electromagnetic interference issues include the following (www.standards.ieee.org):

IEC Technical Committee No. 65, Industrial-Process Measurement and Control, Electromagnetic Compatibility for Industrial-Process Measurement and Control Equipment, Part 3: Radiated
IEEE Std. C37.90-1994, Standard for Relays and Relay Systems Associated with Electric Power Apparatus
IEEE Std. C37.90.1-2002, Surge Withstand Capability (SWC) Tests for Protective Relays and Relay Systems
IEEE Std. C37.90.2-2001, Withstand Capability of Relay Systems to Radiated Electromagnetic Interference from Transceivers
IEEE Std. C37.90.3-2001, Electrostatic Discharge Tests for Protective Relays
IEEE Std. 487-2000, IEEE Recommended Practice for the Protection of Wire-Line Communication Facilities Serving Electric Supply Locations
IEEE Std. 1613, Environmental Requirements for Communications Networking Devices Installed in Electric Power Substations

15.10 Communications Media

This section discusses each of several communications media that might be used for SCADA communications and reviews their merits in light of the several considerations discussed above.

15.10.1 ARDIS (Advanced Radio Data Information Service)

ARDIS was originally developed jointly by Motorola and IBM in the early 1980s for IBM customer service engineers and is owned by Motorola. Service is now available to subscribers throughout the U.S., with an estimated 65,000 users mostly using the network in vertical market applications. Many of these users are IBM customer engineers.

ARDIS is optimized for short message applications that are relatively insensitive to transmission delay. ARDIS uses connection-oriented protocols that are well-suited for host/terminal applications. With typical response times exceeding 4 sec, interactive sessions generally are not practical over ARDIS. As a radio-based service, ARDIS can be expected to be immune to most of the Electromagnetic Compatibility (EMC) issues associated with substations. It provides either 4800-bps or 19.2-kbps service using a 25-kHz channel in the 800-MHz band.

15.10.2 Cellular Telephone Data Services

Several different common-carrier services that are associated with cell-phone technologies are being offered in the marketplace. Space here permits only cursory mention of the several technologies and their general characteristics.

Cellular digital packet data (CDPD) is a digital service that can be provided as an adjunct to existing conventional 800-MHz analog cellular telephone systems. It is available in many major markets but often unavailable in rural areas. CDPD systems use the same frequencies and have the same coverage as analog cellular phones. CDPD provides IP-based packet data service at 19.2 kbps and has been available for a number of years. Service pricing on a use basis has made it prohibitively costly for polling applications, although recent pricing decreases have put a cap in the range of $50 per month for unlimited service. As a radio-based common-carrier service, it is immune to most EMC issues introduced by substations. CDPD is nearing the end of its commercial life cycle and will be decommissioned in the relatively near future by major carriers.

New applications should consider the use of other common-carrier digital systems such as personal communications service (PCS), TDMA (time division multiple access), GSM (global system for mobile

© 2003 by CRC Press LLC

communications), or code division multiple access (CDMA). A third generation of cell-phone technology is currently under development using new technologies called "wideband," including EDGE, W-CDMA, CDMA2000, and W-TDMA. The marketplace competition among these technologies can be expected to be lively. While these technologies can be expected to play a dominant role in the future of wireless communications, it remains unclear what the long-term availability or pricing of any particular one of these technologies will be.

15.10.3 Digital Microwave

Digital microwave systems are licensed systems operating in several bands ranging from 900 MHz to 38 GHz. They have wide bandwidths ranging up to 40 MHz per channel and are designed to interface directly to wired and fiber data channels such as ATM, Ethernet, SONET, and T1 derived from high-speed networking and telephony practice.

The FCC (Federal Communications Commission) allocates available frequencies to users in order to avoid interference. Application of these systems requires path analysis to avoid obstructions and interconnection of multiple repeater stations to cover long routes. Each link requires a line-of-sight path.

Digital microwave systems can provide support for large numbers of both data and voice circuits. This can be provided either as multiples of DS3 ($1 \times$ DS3 = 672 voice circuits) signals or DS1 ($1 \times$ DS1 = 24 voice circuits) signals, where each voice circuit is equivalent to 64 kbps of data, or (increasingly) as ATM or 100 Mbps Fast Ethernet, with direct RJ-45, category-5 cable connections. They can also link directly into fiber-optic networks using SONET/SDH.

Digital microwave is costly for individual substation installations, but it might be considered as a high-performance medium for establishing a backbone communications infrastructure that can meet the utility's operational needs.

15.10.4 Fiber Optics

Fiber-optic cables offer at the same time high bandwidth and inherent immunity from electromagnetic interference. Large amounts of data as high as gigabytes per second can be transmitted over the fiber.

The fiber cable is made up of varying numbers of either single- or multi-mode fibers, with a strength member in the center of the cable and additional outer layers to provide support and protection against physical damage to the cable during installation and to protect against effects of the elements over long periods of time. The fiber cable is connected to terminal equipment that allows slower speed data streams to be combined and then transmitted over the optical cable as a high-speed data stream. Fiber cables can be connected in intersecting rings to provide self-healing capabilities to protect against equipment damage or failure.

Two types of cable are commonly used by utility companies: OPGW (optical ground wire), which replaces a transmission line's shield wire, and ADSS (all dielectric self-supporting). ADSS is not as strong as OPGW but enjoys complete immunity to electromagnetic hazards, so it can be attached directly to phase conductors.

Although it is very costly to build an infrastructure, fiber networks are highly resistant to undetected physical intrusion associated with the security concerns outlined above. Some of the infrastructure costs can be recovered by joint ventures with (or bandwidth sales to) communication common carriers. Optical fiber networks can provide a robust communications backbone for meeting a utility's present and future needs.

15.10.5 Hybrid Fiber Coax

Cable television systems distribute signals to residences primarily using one-way coaxial cable. The cable system is built using an "inverted tree" topology to serve large numbers of customers over a common

© 2003 by CRC Press LLC

cable using (analog) intermediate amplifiers to maintain signal level. This design is adequate for one-way television signals but does not provide the reverse channel required for data services. Cable systems are being upgraded to provide Internet service by converting the coaxial cables to provide two-way communications and adding cable modems to serve customers. The resulting communication data rate is usually asymmetrical, in which a larger bandwidth is assigned downstream (toward the user), with a much smaller bandwidth for upstream service.

Typically the system is built with fiber-optic cables providing the high-speed connection to cable head-ends. Since coaxial cables are easier to tap and to splice, they are preferred for delivery of the signals to the end user. The highest quality, but also most costly, service would be provided by running the fiber cable directly to the end user. Because of the high cost of fiber, variations on this theme employ fiber to the node (FTTN, neighborhood fiber), fiber to the curb (FTTC), and fiber to the home (FTTH).

Because of the difficulty in creating undetected taps in either a coaxial line or a fiber-optic cable, these systems are resistant to many security threats. However, the fact that they typically provide Internet services makes them vulnerable to many of the cyber attacks discussed above, and appropriate security measures should be taken to ensure integrity of service if this alternative is chosen for utility applications.

15.10.6 ISDN

Integrated services digital network (ISDN) is a switched, end-to-end, wide-area network designed to combine digital telephony and data transport services. ISDN was defined by the International Telecommunications Union (ITU) in 1976. Two types of service are available: ISDN basic access (192 kbps), sold as ISDN2, 2B+D, or ISDN BRI; and ISDN primary access (1.544 Mbps), sold as ISDN23, 23B+D, or ISDN PRI. The total bandwidth can be broken into either multiple 64-kbps voice channels or from one to several data channels. ISDN is often used by larger businesses to network geographically dispersed sites.

Broadband ISDN (B-ISDN) provides the next generation of ISDN, with data rates of either 155.520 Mbps or 622.080 Mbps. ISDN can be configured to provide private network service, thereby sidestepping many of the security issues associated with public networks. However, it is still subject to security issues arising from the possibility of an intruder breaking into the telephone company equipment and rerouting "private" services. As a wired service, it is also subject to the electromagnetic interference issues that substations create. The high-speed digital signals will not successfully propagate through isolation and neutralizing transformers and will require isolation using back-to-back optical isolators at the substation.

15.10.7 Digital Subscriber Loop (DSL)

Digital subscriber loop (DSL) transmits data over a standard analog subscriber line. Built upon ISDN technology, DSL offers an economical means of delivering moderately high bandwidth to residences and small offices. DSL comes in many varieties known as xDSL, where x is used to denote the varieties. Commonly sold to end users, ADSL (asymmetric DSL) sends combined data and voice over ordinary copper pairs between the customer's premises and the telephone company's central office. ADSL can provide data rates ranging from 1.5 Mbps to 8 Mbps downstream (depending on phone line characteristics), and 16 kbps to 640 kbps upstream. The digital and analog streams are separated at both the central office and the customer's site using filters, and an ADSL modem connects the data application to the subscriber line.

Telephone companies use HDSL (high-speed DSL) for point-to-point T1 connections, and SDSL (symmetric or single-line DSL) to carry T1 on a single pair. HDSL can carry T1 (1.544 Mbps) and FT1 (fractional T1) data in both directions. The highest speed implementation to date is VDSL (very high-speed DSL) that can support up to 52 Mbps in the downstream data over short ranges. ADSL can operate up to 6000 m, whereas VDSL can only attain full speed up to about 300 m. A key advantage of DSL is its competitive pricing and wide availability. A disadvantage is that service is limited to circuit lengths of less than 3.6 km without repeaters. As a wired service, DSL has the same security and EMC issues as ISDN.

© 2003 by CRC Press LLC

15.10.8 Telephone Lines: Leased and Dial-Up

Dedicated, so-called leased or private voice-grade lines with standard 3-kHz voice bandwidth can be provided by the telephone company. Dial-up telephone lines provide similar technical characteristics, with the key difference being the manner of access (dial-up) and the fact that the connection is "temporary."

Commonly thought of as providing a "private twisted pair," leased lines are seldom built in this manner. Rather, these circuits are routed, along with switched lines, through standard telephone switches. Unless otherwise ordered, routing (and performance characteristics) of such circuits can change without warning to the end user. Dedicated circuits, known in the industry as 3002 circuits, can support modem data rates up to 19.2 kbps and up to 56 kbps with data compression. High-performance so-called digital-data-services (DDS) circuits can support modem communications up to 64 kbps with special line conditioning.

Security issues for all telephone circuits include the fact that they are easily tapped in an unobtrusive manner, which makes them vulnerable to many of the security attacks discussed above. In addition, they can be rerouted in the telephone switch by a malicious intruder, and dial-up lines are easily accessed by dialing their phone numbers from the public telephone network. Thus it is important that these circuits be protected by the appropriate physical, data-link, or network layer measures as discussed above. In the case of IED interfaces accessible by dial-up phone lines, they must at a minimum be protected by enabling sign-on passwords, with the possibility of other systems such as dial-back modems or physical-layer encryption, as discussed in Chapter 17, Cyber Security of Substation Control and Diagnostic Systems.

Telephone circuits are susceptible to all of the electromagnetic interference issues discussed above and should be protected by appropriate isolation devices.

15.10.9 MAS Radio

Multiple address (MAS) radio is popular due to its flexibility, reliability, and small size. A MAS radio link consists of a master transceiver (transmitter/receiver) and multiple remote transceivers operating on paired transmit/receive frequencies in the 900-MHz band. The master radio is often arranged to transmit continuously, with remote transmitters coming up to respond to a poll request. Units are typically polled in a round-robin fashion, although some work has been done to demonstrate the use of MAS radios in a contention-based network to support asynchronous remote device transmissions.

The frequency pairs used by MAS must be licensed by the FCC and can be reused elsewhere in the system with enough space diversity (physical separation). Master-station throughput is limited by radio-carrier stabilization times, and data rates are limited to a maximum of 9.6 kbps. Maximum radius of operation without a special repeater is approximately 15 km, so multiple master radios would be required for a large service territory.

MAS radio is a popular communication medium and has been used widely by utilities for SCADA systems and DA (distribution automation) systems. MAS radio is susceptible to many of the security threats discussed above, including denial of service (radio jamming), spoof, replay, and eavesdropping. In addition, the licensed frequencies used by these systems are easily available in the public domain. For this reason it is important that systems using MAS radio be protected against intrusion using the techniques discussed above.

15.10.10 Mobile Computing Infrastructure

Systems and personal devices that allow "on the go" communications, often including Internet access, are rapidly emerging in the marketplace. These systems offer opportunities to provide communications for IP-based utility applications, often with easy setup and low service costs. New wireless technologies can be expected to provide data rates in excess of 100 kbps. Applications built on these technologies should include network-level or above security protection similar to that required of other networked communication systems. For additional discussion on these emerging technologies, refer also to Section 15.10.2.

© 2003 by CRC Press LLC

15.10.11 Mobile Radio

Mobile radio systems operating in the VHF, UHF, and 800-MHz radio bands have sometimes been pressed into shared-data service along with their primary voice applications. Such use is problematic due to the fact that the systems are designed for analog (voice) rather than digital (data) applications and because they are shared with voice users. It is difficult to license new applications on these channels, and their use for digital applications should be discouraged. The emerging "mobile computing" technologies are much more attractive for these applications.

15.10.12 Mobitex Packet Radio

Mobitex is an open, international standard for wireless data communications developed by Ericsson. It provides remote access for data and two-way messaging for mobile computing applications. The technology is similar to that used in ARDIS and cellular telephone systems. Like mobile telephone systems, the Mobitex networks are based on radio cells. Base stations allocate digital channels to active terminals within limited geographic areas. Data are divided into small packets that can be transmitted individually and as traffic permits. Setup time is eliminated and network connections are instantaneous. Packet switching provides more efficient use of channel capacity. Area and main exchanges handle switching and routing in the network, thereby providing transparent and seamless roaming within the U.S. A modest data rate of 8 or 16 kbps makes it useful for small amounts of data or control but not for large file transfers. Service is offered to large portions of the U.S. population (primarily in the East), but rural service may be lacking. As part of a public network, applications should employ end-to-end application-layer security.

15.10.13 Paging Systems

Paging systems have been used very effectively for certain utility applications that typically require only one-way command operation. Paging networks are built using carefully engineered sets of system controllers, transmitters, and data links designed to make sure the system has optimal coverage and response while minimizing interference. Some systems use satellite channels to provide wide-area coverage. Most paging systems use simulcast techniques and multiple transmitters to give continuous coverage over their service areas. Typical systems provide publicly accessible interfaces using dial-up, modem, and/or Internet access. The over-the-air protocol is the POCSAG (post office code standardization advisory group) standard operating in the 900-MHz band. Most systems are one-way (outbound), but a few also offer inbound messaging services. Systems have large capacities but are subject to intolerable delays when overloaded. Service cost is typically very low, making this system very attractive for certain applications.

As part of a public network, application-layer security to protect from masquerading attacks is appropriate. A coordinated denial-of-service attack may be possible but is unlikely to occur for the types of applications for which this system is suited.

15.10.14 Power-Line Carrier

Power-line carrier (PLC) systems, operating on narrow channels between 30 and 500 kHz, are frequently used for high-voltage-line protective relaying applications. Messages are typically simple, one-bit messages using either amplitude- or frequency-shift keying, which tells the other end of a dedicated link to trip or to inhibit the tripping of a protective circuit breaker.

Other PLC systems have been developed for specialized distribution feeder applications such as remote meter reading and distribution automation. Early in the development of PLC systems, it was observed that signals below approximately 10 kHz would propagate on typical distribution feeders, with the primary impediments coming from shunt power-factor-correction capacitors and from series impedances of distribution transformers. These two components work together as a low-pass filter to make it difficult

© 2003 by CRC Press LLC

to transmit higher frequency signals. In addition, signaling at lower frequencies approaching the power-line frequency is difficult because of harmonic interference from the fundamental power line itself.

One successful system uses frequency shift keying (FSK) signals in the 10-kHz range to provide communications for distribution automation. Two systems — the two-way automatic communications system (TWACS) and the Turtle — use communications based on modification of the 60-Hz waveform itself. Both systems use disturbances of the voltage waveform for outbound communication and of the current waveform for inbound communication. The primary difference between the two systems is that TWACS uses relatively higher power and data rates of 60 bps, while the Turtle system uses extremely narrow bandwidth signaling — on the order of 1/1000 bps — and massively parallel communications, with each remote device having its own logical channel. The TWACS system is used for both automatic meter reading and distribution automation, while the Turtle system is used mostly for meter reading.

For an intruder with the proper equipment, both of these systems would be subject to both eavesdropping and masquerading types of security threats, so security measures are appropriate. With the limited data rates of these systems, only simple encryption techniques using secret keys are appropriate.

Recent and much-publicized work has been conducted to develop high-speed data services that claim to deliver data rates as high (in one case) as a gigabit per second. Spread-spectrum techniques may deliver data rates previously unattainable, but fundamental physical constraints make it unlikely that successful data rates will be delivered much above 100 kbps.

PLC systems are exposed to public access, and encryption techniques are appropriate to protect any sensitive information or control communications.

15.10.15 Satellite Systems

Satellite systems that offer high-speed data service have been deployed in two different forms, broadly categorized by their orbits. Hughes built the first geosynchronous-orbit (GEO) communications satellite in the early 1960s under a NASA contract to demonstrate the viability of such satellites operating in an earth orbit 22,300 miles (35,900 km) above the ground. The attractive feature of these satellites is that they appear fixed in the sky and therefore do not require costly tracking antennas. Such satellites are commonly used today to distribute radio and television programming and are useful for certain data applications.

Because of the large distances to the satellite, GEO systems require relatively large parabolic antennas in order to keep satellite transponder power levels to a manageable level. Because of the distances involved, each trip from earth to satellite and back requires a time span of 0.25 s. Some satellite configurations require all data to pass through an earth station on each hop to or from the end user, thereby doubling this time before a packet is delivered to the end device. If the communications protocol requires link-layer acknowledgments for each packet (typical of most legacy SCADA protocols), this can add as much as one second to each poll/response cycle. This can be unacceptably large and have a significant impact on system throughput, so careful protocol matching is appropriate if a GEO satellite link is being considered. This long delay characteristic also makes GEO satellites undesirable for two-way telephone links.

A second satellite technology that is gaining popularity is the low-earth-orbit (LEO) satellite. LEOs operate at much lower altitudes of 500 to 2000 km. Because of the lower altitude, the satellites are in constant motion (think of a swarm of bees), so a fixed, highly directional antenna cannot be used. But compensating for this is the fact that the smaller distances require lower power levels, so if there are a sufficient number of satellites in orbit — and if their operation is properly coordinated — LEOs can provide ubiquitous high-speed data or quality voice service anywhere on the face of the earth. LEO systems can be quickly deployed using relatively small earth stations. There are a number of competing service providers offering several varieties of LEO service: "little LEOs" for data only, "big LEOs" for voice plus limited data, and "broadband LEOs" for high-speed data plus voice. Search "LEO satellite" on the Internet for more information.

All satellite systems are subject to eavesdropping, so the use of appropriate security measures is indicated to avoid loss of confidential information.

© 2003 by CRC Press LLC

15.10.16 Short Message System (SMS)

SMS (also known as "text messaging") uses the forward and reverse control channels (FOCC and RECC, respectively) of cell phone systems to provide two-way communication service for very short telemetry messages. The FOCC and RECC are the facilities normally used to authorize and set up cell-phone calls. Since the messages are short and the channel is unused during a voice call, there is surplus unused bandwidth available in all existing analog cell-phone systems that can be used for this service. SMS systems send information in short bursts of 10 bits in the forward (outbound) direction and 32 bits in the reverse (inbound) direction, making them well-suited for control and status messaging from simple remote terminal units (RTUs). Message integrity is enhanced through the use of three out of five voting algorithms. A number of companies are offering packaged products and services that can be very economical for simple status and control functions. Utility interface to the system is provided using various Internet, telephone, and pager services. Search the web for "SMS telemetry" for more information.

15.10.17 Spread-Spectrum Radio and Wireless LANs

New radio technologies are being developed as successors to traditional MAS and microwave radio systems that can operate unlicensed in the 900-MHz, 2.4-GHz, and 5.6-GHz bands or licensed in other nearby bands. These systems typically use one of several variants of spread-spectrum technology and offer robust, high-speed point-to-point or point-to-multipoint service. Interfaces can be provided ranging from 19.2 kbps RS232 to Ethernet, and line-of-sight distances ranging from 1 to 20 miles are possible, depending on antenna and frequency band choices and transmitter power. Higher-powered devices require operation in licensed bands.

In contrast to traditional radio systems, spread-spectrum radio transmits information spread over a band of frequencies either sequentially (frequency-hopping spread spectrum [FHSS]) or in a so-called chirp (direct-sequence spread spectrum [DSSS]). Other closely related but distinct modulation techniques include orthogonal-frequency-division multiplexing (OFDM), which sends data in parallel over a number of subchannels. The objective in all of these systems is to allow operation of multiple systems concurrently without interference and with maximum information security. The existence of multiple systems in proximity to each other increases the apparent noise background, but it is not immediately fatal to successful communications. Knowledge of the frequency hopping or spreading "key" is necessary for the recovery of data, thus rendering the system resistant to jamming (denial of service) and eavesdropping attacks.

Variants of DSSS, FHSS, and OFDM are being offered in commercial products and are being adopted in emerging wireless LAN standards, such as the several parts of IEEE 802.11 (wireless LAN) and 802.16 (broadband wireless access). This is a rapidly changing technology. Search the web for "spread spectrum," "DSSS," "FHSS," and "OFDM" for more information and to discover a current list of vendors.

15.10.18 T1 and Fractional T1

T1 is a high-speed digital network (1.544 Mbps) developed by AT&T in 1957 and implemented in the early 1960s to support long-haul pulse-code modulation (PCM) voice transmission. The primary innovation of T1 was to introduce "digitized" voice and to create a network fully capable of digitally representing what was, up until then, a fully analog telephone system. T1 is part of a family of related digital channels used by the telephone industry that can be delivered to an end user in any combination desired. The T1 family of channels is listed in Table 15.1.

T1 is a well-proven technology for delivering high-speed data or multiple voice channels. Depending on the proximity of the utility facility to telephone company facilities, the cost can be modest or high. See also the discussion of DSL for additional options.

As a wired facility, T1 is subject to the electromagnetic interference issues discussed above unless it is offered using fiber-optic facilities (see discussion of fiber optics).

© 2003 by CRC Press LLC

TABLE 15.1 DS Data Rates

Name	Data Rate	# of T1's	# of voice chan
DS0	64 Kbps	1/24 of T-1	1 Channel
DS1	1.544 Mbps	1 T-1	24 Channels
DS1C	3.152 Mbps	2 T-1	48 Channels
DS2	6.312 Mbps	4 T-1	96 Channels
DS3	44.736 Mbps	28 T-1	672 Channels
DS3C	89.472 Mbps	56 T-1	1344 Channels
DS4	274.176 Mbps	168 T-1	4032 Channels

Since T1 was originally designed to serve voice users, delivery of data bits with a minimum of latency and jitter is important, but occasional discarding of data is not considered a problem. Therefore, equipment using T1 links should provide link error checking and retransmission.

A T1 link is point to point, and interfacing to a T1 facility requires sophisticated equipment, so a T1 facility is resistant to casual eavesdropping security attacks. But since it is part of a system exposed to outside entities and with the possibility that an intruder to the telephone facility could eavesdrop or redirect communications, it is important that systems using T1 facilities employ end-to-end security measures at the network layer or above, as discussed in Section 15.8, which addresses security issues.

15.11 Additional Information

A number of organizations have produced standards that can be used as guidelines when designing substation communication systems. There are also Internet resources that can be studied for further information. References to some of these standards and web sites are provided below.

15.11.1 Useful Web Sites

American National Standards Institute (ANSI): www.ansi.org
Institute of Electrical and Electronics Engineers (IEEE): www.ieee.org
International Electrotechnical Commission (IEC): www.iec.ch
Internet Engineering Task Force (IETF): www.ietf.org
International Standards Organization (ISO): www.iso.ch
National Institute of Standards and Technology (NIST): www.nist.gov
International Telecommunications Union (ITU): www.itu.int
DNP User's Group: www.dnp.org
UCA User's Group: www.ucausersgroup.org
Information on Systems Engineering: http://www.bredemeyer.com
Publicly available ISO standards: http://www.acm.org/sigcomm/standards/

15.11.2 Relevant Standards

15.11.2.1 IEEE 802.x Networking Standards

IEEE 802.x standards are available from www.standards.ieee.org. These standards are currently available in electronic form at no cost 6 months after publication.

© 2003 by CRC Press LLC

15.11.2.2 IEEE Electromagnetic Interference (EMI) Standards

IEEE Std. C37.90-1994, Standard for relays and relay systems associated with electric power apparatus
IEEE Std. C37.90.1-2002, Surge withstand capability (SWC) tests for protective relays and relay systems
IEEE Std. C37.90.2-2001, Withstand capability of relay systems to radiated electromagnetic interference from transceivers
IEEE Std. C37.90.3-2001, Electrostatic discharge tests for protective relays
IEEE Std. 487-2000, IEEE recommended practice for the protection of wire-line communication facilities serving electric supply locations
IEEE Std. 1613, Environmental requirements for communications networking devices installed in electric power substations

15.11.2.3 IEC 870-5 Standards

IEC 60870-1-1 TR0, ed. 1.0, Telecontrol equipment and systems, Part 1: General considerations, Section 1: General principles
IEC 60870-1-2, ed. 1.0, Telecontrol equipment and systems, Part 1: General considerations, Section 2: Guide for specifications
IEC 60870-1-3 TR3, ed. 2.0, Telecontrol equipment and systems, Part 1: General considerations, Section 3: Glossary
IEC 60870-1-4 TR3, ed. 1.0, Telecontrol equipment and systems, Part 1: General considerations, Section 4: Basic aspects of telecontrol data transmission and organization of standards IEC 870-5 and IEC 870-6
IEC 60870-1-5 TR, ed. 1.0, Telecontrol equipment and systems, Parts 1–5: General considerations — Influence of modem transmission procedures with scramblers on the data integrity of transmission systems using the protocol IEC 60870-5
IEC 60870-2-1, ed. 2.0, Telecontrol equipment and systems, Part 2: Operating conditions, Section 1: Power supply and electromagnetic compatibility
IEC 60870-2-2, ed. 1.0, Telecontrol equipment and systems, Part 2: Operating conditions, Section 2: Environmental conditions (climatic, mechanical and other nonelectrical influences)
IEC 60870-3, ed. 1.0, Telecontrol equipment and systems, Part 3: Interfaces (electrical characteristics)
IEC 60870-4, ed. 1.0, Telecontrol equipment and systems, Part 4: Performance requirements
IEC 60870-5-1, ed. 1.0, Telecontrol equipment and systems, Part 5: Transmission protocols, Section 1: Transmission frame formats
IEC 60870-5-2, ed. 1.0, Telecontrol equipment and systems, Part 5: Transmission protocols, Section 2: Link transmission procedures
IEC 60870-5-3, ed. 1.0, Telecontrol equipment and systems, Part 5: Transmission protocols, Section 3: General structure of application data
IEC 60870-5-4, ed. 1.0, Telecontrol equipment and systems, Part 5: Transmission protocols, Section 4: Definition and coding of application information elements
IEC 60870-5-5, ed. 1.0, Telecontrol equipment and systems, Part 5: Transmission protocols, Section 5: Basic application functions
IEC 60870-5-101, ed. 1.0, Telecontrol equipment and systems, Part 5: Transmission protocols, Section 101: Companion standard for basic telecontrol tasks
IEC 60870-5-101, ed. 1.0, Amendment 1
IEC 60870-5-101, ed. 1.0, Amendment 2
IEC 60870-5-102, ed. 1.0, Telecontrol equipment and systems, Part 5: Transmission protocols, Section 102: Companion standard for the transmission of integrated totals in electric power systems
IEC 60870-5-103, ed. 1.0, Telecontrol equipment and systems, Part 5: Transmission protocols, Section 103: Companion standard for the informative interface of protection equipment
IEC 60870-5-104, ed. 1.0, Telecontrol equipment and systems, Part 5: Transmission protocols, Section 104: Network access for IEC 60870-5-101 using standard transport profiles

© 2003 by CRC Press LLC

15.11.2.4 DNP3 Specifications

IEEE Std. 1379-1997, IEEE trial-use recommended practice for data communications between intelligent electronic devices and remote terminal units in a substation

DNP 3.0 specifications (available on-line at www.dnp.org), "A DNP3 Protocol Primer," specifications in four documents available to users group members: DNP V3.00, Data link layer protocol description; DNP V3.00, Transport functions; DNP V3.00, Application layer protocol description; DNP V3.00, Data object library

15.11.2.5 IEC 870-6 TASE.2 (UCA/ICCP) Standards

IEC 60870-6-1 TR3, ed. 1.0, Telecontrol equipment and systems, Part 6: Telecontrol protocols compatible with ISO standards and ITU-T recommendations, Section 1: Application context and organization of standards

IEC 60870-6-2, ed. 1.0, Telecontrol equipment and systems, Part 6: Telecontrol protocols compatible with ISO standards and ITU-T recommendations, Section 2: Use of basic standards (OSI layers 1–4)

IEC 60870-6-503, ed. 2.0, Telecontrol equipment and systems, Part 6-503: Telecontrol protocols compatible with ISO standards and ITU-T recommendations — TASE.2 Services and protocol

IEC 60870-6-505 TR, ed. 1.0, Telecontrol equipment and systems, Part 6-505: Telecontrol protocols compatible with ISO standards and ITU-T recommendations — TASE.2 User guide

IEC 60870-6-601, ed. 1.0, Telecontrol equipment and systems, Part 6: Telecontrol protocols compatible with ISO standards and ITU-T recommendations, Section 601: Functional profile for providing the connection-oriented transport service in an end system connected via permanent access to a packet switched data network

IEC 60870-6-602 TS, ed. 1.0, Telecontrol equipment and systems, Part 6-602: Telecontrol protocols compatible with ISO standards and ITU-T recommendations — TASE transport profiles

IEC 60870-6-702, ed. 1.0, Telecontrol equipment and systems, Part 6-702: Telecontrol protocols compatible with ISO standards and ITU-T recommendations — Functional profile for providing the TASE.2 application service in end systems

IEC 60870-6-802, ed. 2.0, Telecontrol equipment and systems, Part 6-802: Telecontrol protocols compatible with ISO standards and ITU-T recommendations — TASE.2 Object models

15.11.2.6 IEC 61850/UCA Standards

IEEE TR 1550-1999 EPRI/UCA Utility Communications Architecture (UCA) Version 2.0 1999, IEEE Product No: SS1117-TBR, IEEE Standard No: TR 1550-1999

IEC 61850-1 Communication networks and systems in substations, Part 1: Introduction and overview

IEC 61850-2 Communication networks and systems in substations, Part 2: Glossary

IEC 61850-3 Communication networks and systems in substations, Part 3: General requirements

IEC 61850-4 Communication networks and systems in substations, Part 4: System and project management

IEC 61850-5 Communication networks and systems in substations, Part 5: Communication requirements

IEC 61850-6 Communication networks and systems in substations, Part 6: Configuration description language for substation IEDs

IEC 61850-7-1 Communication networks and systems in substations, Part 7-1: Basic communication structure for substation and feeder equipment — Principles and models

IEC 61850-7-2 Communication networks and systems in substations, Part 7-2: Basic communication structure for substation and feeder equipment — Abstract communication service interface

IEC 61850-7-3 Communication networks and systems in substations, Part 7-3: Basic communication structure for suubstation and feeder equipment — Common data classes

© 2003 by CRC Press LLC

IEC 61850-7-4 Communication networks and systems in substations, Part 7-4: Basic communication structure for suubstation and feeder equipment — compatible logical node classes and data classes

IEC 61850-8-1 Communication networks and systems in substations, Part 8-1: SCSM — Mapping to MMS (ISO/IEC 9506 Part 1 and Part 2) and ISO/IEC 8802-3

IEC 61850-9-1 Communication networks and systems in substations, Part 9-1: SCSM — Specific Communication Service Mapping (SCSM) — Sampled values over serial unidirectional multidrop point to point link

IEC 61850-9-2 Communication networks and systems in substations, Part 9-2: SCSM — Specific Communication Service Mapping (SCSM) — Sampled values over ISO/IEC 8802-3

IEC 61850-10 Communication networks and systems in substations, Part 10: Conformance testing

15.11.2.7 ISO Reference Models (available on-line at www.iso.ch)

ISO/IEC 7498-1:1994, 2nd ed., Information technology, open systems interconnection, basic reference model: the basic model

ISO/IEC 7498, Security architecture, Part 2 (superseded by ISO/IEC 10745 and ITU-T X.803, Upper layers security model; ISO/IEC 13594 and ITU-T X.802, Lower layers security model; and ISO/IEC 10181-1 and ITU-T X.810, Security frameworks, Part 1: Overview)

ISO/IEC 7498-3:1997, 2nd ed., Information technology, open systems interconnection, basic reference model: naming and addressing

ISO/IEC 7498-4:1989, 1st ed., Information processing systems, open systems interconnection, basic reference model, Part 4: management framework

© 2003 by CRC Press LLC

16

Physical Security[1]

16.1 Introduction 16-1
16.2 History 16-2
16.3 Types of Intruders 16-3
General Public • Youth Groups • Urban Gangs • Disgruntled Employees • Terrorist Groups
16.4 Substation Development 16-4
Undeveloped Property • Construction • Operational
16.5 Security Methods 16-5
Minimum Requirements • Landscaping • Fences and Walls • Locks • Barriers • Lighting • Building Design • Patrol • Signs • Clear Areas and Safety Zones • Area Maintenance • Intrusion Detection Systems • System Solutions
16.6 Security Assessment 16-11
Goal • Existing Station Assessment • Responsibility for Security
References 16-14

John Oglevie
Power Engineers

Pat Rooney
Rooney Protective Consulting Group

16.1 Introduction

Electricity is an essential service. Our society and our economy cannot function without it. It is delivered to us through the substations that we coexist with on a daily basis. Substations exist in every neighborhood of every city. They are adjacent to or within the town proper of every small town. They exist in the isolated, remote, and rural areas of most countries. More often than not, they exist next to every major commercial or industrial facility in the country. They range in size from a single transformer with fused cutouts to separate a couple of feeders, to multiple transformers in megasize stations covering tens of acres. They exist at every voltage from 2400 V to 765 kV ac and ±600 kV dc. They are all around us. They number in the millions.

In order to provide continuous, uninterrupted service, these stations must be secured against accidental or deliberate damage to the equipment contained within. The methods used in recent times have focused on keeping the general public from harm, discouraging the vandal or neighborhood gang from practicing malicious destruction of equipment, preventing animal intrusion and subsequent contact with the energized equipment, and minimizing the liability of the owner/operator due to the injury or death of an intruder.

In the aftermath of 9-11 (Figure 16.1), attention has been focused on the threat of a terrorist attack on the electric system as a whole. There are numerous national, public, and private organizations investigating, analyzing, and publishing articles on both the strengths and weaknesses of the electric system. Individual utilities are reviewing their system integrity and security methods to determine the points of weakness within their systems and how to strengthen them.

[1]Sections of this chapter reprinted with permission from IEEE Std. 1402-2000, *IEEE Guide 1402 for Electric Power Substation Physical and Electronic Security,* Copyright 2000, by IEEE. The IEEE disclaims any responsibility or liability resulting from the placement and use in the described manner.

0-8493-1703-7/03/$0.00+$1.50

© 2003 by CRC Press LLC

© 2003 by CRC Press LLC

FIGURE 16.1 A 65 MVA, 138/13 KV transformer crushed when the World Trade Center collapsed. (From ConEdison, New York, NY. With permission.)

The discussions here include a combination of the traditional methods used to provide physical security to substations as well as additional information learned since 9-11 that focuses almost exclusively on the new threat of a possible terrorist attack on a given facility. The methods discussed here can be applied to switching stations as well as substations. They are intended to include transmission and distribution stations in urban, suburban, rural, and remote locations.

Only the physical security of a station to prevent human intrusion is considered. The security for power plant switchyards is included, but not the power plant itself. Physical security for stations attached to nuclear power plants is not included, since they are generally included in the security of the plant itself. Cybernetwork security, the prevention of intrusion into a substation using electronic methods, is discussed in Chapter 17, Cyber Security of Substation Control and Diagnostic Systems.

16.2 History

The earliest stations did not have security at all. The distribution system for Edison's Pearl Street station was buried in the sidewalks just under the surface. Access to the equipment could be gained just by lifting an access plate. Some of the very early hydro generating stations in the west had the distribution and switching equipment mounted on the walls adjacent to the units and without protective barriers. Prior to World War II, stations were lit by the utilities that owned them. They represented progress and were put on display. The utilities that brought electricity to town and homes were regarded with prestige. But during the 60s and 70s, with the advent of anti-establishment, anti-Vietnam war, and pro-environmental groups, the facilities became targets instead of symbols of progress. The utilities of the day had to increase the level of security around stations not only to prevent harm to individuals, but also to protect the equipment from vandalism. Now, terrorism has created yet another level of concern with the physical security of critical stations.

© 2003 by CRC Press LLC

The events of 9-11 were not the first time utility assets have been discussed as the subject of a security threat. A panel of electric power engineers in 1950 published a report analyzing the vulnerability of domestic electric systems [1]. They stated: "The concerted attack would probably come without previous warning similar to that of the Japanese on Pearl Harbor.… Full coordination of planning activities with local, state, federal and military authorities, and adjoining electric utilities must be accomplished."

16.3 Types of Intruders

For this document, intrusion is defined as the unauthorized human access to a substation property. The owner/operator can be a utility (either public or private), an independent power producer (IPP), or an industrial or a commercial entity in the business of generating, transmitting, or distributing electric energy. The property can be either developed or undeveloped. Intrusion can be by individuals or groups. They can be accidental, deliberate but nonspecific (vandalism), or deliberate with a premeditated purpose (malicious destruction or a terrorist act). The people or groups can be classified as follows:

- General public
- Youth groups
- Urban gangs
- Disgruntled employees
- Terrorists

16.3.1 General Public

The general public is the group that is most frequently exposed to these facilities. On a daily basis we drive by and/or work next to some portion of the transmission system. Generally we come into contact with them only by accident. Unplanned, accidental intrusion is the category of least concern. The threat to the system is minimal, while the risk to the intruder is the greatest.

16.3.2 Youth Groups

Today's community groups view stations as detractors to the value of their property, and as a result they want them to be invisible. Substation designers try to make them more acceptable by planting trees and shrubbery around them to give them an aesthetic, environmentally pleasing appearance. But hiding the station can lead the grounds to be used by youth groups as a meeting place where their actions will be hidden from the public eye. The damage these groups do to a station can be deliberate but is still random and can be classified as acts of vandalism. Types of vandalism practiced by these groups that can lead to a forced outage of the equipment can include gunshots that destroy breaker and transformer bushings, throwing chains over an energized bus, and damage to control panels in control buildings.

16.3.3 Urban Gangs

Urban gangs, unlike youth groups, are more closely associated with criminal activity. In many cases the property is not used out of convenience, as is the case with groups of youths, but as part of their territory. To indicate this they will mark their territory with the type of graffiti called "tagging." By tagging the property, they have warned rival gangs of their claim to the property, which can lead to "turf wars" between these gangs on the property, which increases the risk of destruction to the property.

16.3.4 Disgruntled Employees

There are numerous instances on record of disgruntled employees who have caused damage within a station as the result of some grievance with the owner/operator. They pose a higher threat than youth groups or urban gangs because they represent an internal threat to the system. Their acts are not only

© 2003 by CRC Press LLC

deliberate; they possess specialized knowledge that can be used to increase the impact to the owner/operator and to the community. There are many cases of disgruntled employees opening the oil valves on transformers. There is a case on record of a disgruntled employee attaching a homemade bomb to the side of a piece of equipment. One disgruntled employee during the 2001 Winter Olympics went into the substation control building and opened several specific breakers, which caused an area power outage of "one hour affecting 33,000 residential customers. The outage sparked a fire at the Tesoro oil refinery in North Salt Lake, which sent a plume of black smoke skyward about a mile from the Salt Lake International Airport" [2]. Disgruntled employees usually work alone. They prefer to remain anonymous. Their anger is focused solely at their employer.

16.3.5 Terrorist Groups

Terrorism is defined in the U.S. by the Code of Federal Regulations as: "the unlawful use of force and violence against persons or property to intimidate or coerce a government, the civilian population, or any segment thereof, in furtherance of political or social objectives" (28 C.F.R. Section 0.85). EPRI has defined three types of terrorist attacks [3].

- Attacks *upon* the system: the power system itself is the primary target with ripple effect throughout the society
- Attacks *by* the system: the population is the actual target, with the power system used as a weapon
- Attacks *through* the system: utility networks provide the conduit for attacks on other critical infrastructure

There is no generally accepted definition or classification in use today with which to classify these groups. They can be grouped as either domestic or internationally based. They can be grouped into such general categories as social, political, or environmental groups; religious extremists; rogue states or state-sponsored groups; and nationalist groups. They can act for ideological, religious, or apocalyptic reasons. In today's world, rather than being structured groups like those of the 60s and 70s, they now can be ad hoc groups that coalesce, come together for an attack, and then go away.

Regardless of the method used to classify them, they differ from all of the previous groups discussed in several ways. They are determined. They want their actions to be visible. Their intent is to interfere with some process or the completion of some project. The project can be an electric power project or some other third-party project that can be harmed through the interruption of power. These groups are organized, and their actions are planned and carefully organized. Their intent is to bring public attention to their cause; to create chaos, panic, and terror within the community; or to create a diversion as a cover for some other primary but unrelated target. They are well funded, and they have access to weapons and intelligence.

Their targets can be either symbolic or pragmatic. Symbolic targets are those that represent either directly or indirectly the actual intended target of the group. The attack on the World Trade Center and the Pentagon were symbolic because they represent the economic and military power of the U.S. Pragmatic targets are those that have a direct consequence as the result of their damage or destruction.

16.4 Substation Development

Human intrusions onto substation sites can create many problems and can occur during any of the following three stages of substation development: vacant or undeveloped property, construction of a facility, and the operational life of the station.

16.4.1 Undeveloped Property

Vacant land is most attractive to the general public, youth groups, and urban gangs. The land can be used for play, for dumping waste materials, for vandalism, and for illicit activities. With respect to play,

© 2003 by CRC Press LLC

any number of items can draw people's attention. These include old wells, septic systems, caves, trees, rock formations, and ponds. Dumping trash can lead to civil complaints and expensive cleanup operations. The use of the property by youth groups and urban gangs can lead to public complaints and civil suits. People who are attracted to and regularly use these sites are more likely to suffer injury or death.

16.4.2 Construction

Each of the problems associated with an undeveloped property can also occur during the construction stage. In addition, there are new hazards such as excavations, uncompleted structures, and on-site construction equipment. Additional problems that can occur during construction are theft and increased vandalism. Construction materials that contain copper and aluminum are very attractive for theft. Many of these construction materials are long-lead items. Consequently theft or damage of these items can cause schedule delays. Construction equipment such as pickup trucks and excavation equipment can be stolen.

16.4.3 Operational

The operational or energized stage of the station's life does not necessarily deter people and groups from entering the facility. Incidences of vandalism and theft are just as likely to occur after a station is energized as they were in the previous two stages. But the chances of injury or death are more likely because the station is energized. Most of the groups described above lack the specific equipment knowledge to know the dangers and stay clear of energized parts. In addition, now that the station is energized, the operation or destruction of station equipment can affect the integrity of the electric power supply and the reliability of the transmission and distribution grid, if the intrusion results in power interruptions. Intruders have been known to open valves, push buttons, and operate circuit breakers, reclosers, and switches.

16.5 Security Methods

Security requirements should be identified in the early design stages of the substation project. Generally, it may be more economical to anticipate and incorporate security measures into the initial design rather than retrofit substations at a later date.

16.5.1 Minimum Requirements

The minimum security requirement for every station is to prevent injury or death of someone by coming into contact with energized equipment. The best way to do this is to prevent the site from being used as a gathering place for individuals and groups and to prevent entry to the station by unauthorized and untrained individuals. Fences of varying kinds, walls, locks, lighting, landscaping, and control-building design are all methods employed to keep both trained and untrained persons from harming themselves. Beyond this basic need, other security methods have been developed to detect or prevent unintended or unlawful entry onto a site. These include motion detectors, video cameras, guards, SCADA-monitored doors and locks, and enhanced building security systems. The level of security appropriate to a given station will be discussed in Section 16.6 of this chapter, Security Assessment.

16.5.2 Landscaping

Landscaping around a substation can make the station more pleasing to the surrounding community, but the landscaping should be carefully designed so as not to create hidden areas that are attractive as a meeting place for people and groups. Landscaping must be regularly maintained. Trees and shrubbery must be pruned to avoid concealing intrusion and illegal activity. An appearance of "pride in ownership" can project an image of regular visits by personnel that will keep many would-be intruders away from the facility.

© 2003 by CRC Press LLC

Consider using thorny plants or bushes near fences and walls to deter potential intruders from tampering with physical barriers. Plants such as firethorn (pyracantha), barberry (berberis), quince (chaenmeles), yucca, rose bushes, and certain types of holly are good examples of plants that can be used to deter intruders. Avoid plants that may interweave through fencing fabric.

16.5.3 Fences and Walls

Every station has a perimeter fence around that portion of the property used for the energized equipment. It is the first line of defense against intrusion. Fences are also used inside the station proper to provide an additional safety barrier for trained personnel working in the yard.

Fences of various materials can be used to provide primary security to limit access to substation property. Refer to the National Electric Safety Code (NESC) (Accredited Standards Committee C2-2002) for fence requirements. In addition, there are numerous IEEE standards and guides detailing the fencing requirements for various applications such as shunt and series capacitor banks, shunt reactors, etc.

Fences can be either fabric or solid walls. Fabric fences will stop the casual intruder from entering the station yard. They are usually chain link with three strands of barbed wire at the top to discourage an intruder from climbing the fence to gain entry. The designer should keep in mind when considering a fabric fence that the stronger and more difficult the fence is to breach, the more determined the individual or group must be to gain entry to the station.

In general, consider using a commercial-grade, galvanized fabric, either 3.0 mm (11 gage) or 3.8 mm (9 gage). The mesh opening size should preferably be 50 mm (2 in.), but not larger than 60 mm (2.4 in.) to resist climbing. The height of the fence should be a minimum of 2.1 m (7 ft) above ground line. In cold areas, it is preferable if the fence is 2.1 m (7 ft) above the maximum snow accumulation. In higher risk areas, consider using three strands of razor wire, angled toward the outside away from the facility. Areas vulnerable to vehicle penetration may consider reinforcing the fence with 19-mm diameter (or larger) aircraft cable mounted to the fence supports, inside the mesh fabric, at a height of approximately 0.75 m (30 in.) above ground level.

Solid walls can be either masonry or metal. Solid walls have the advantage of preventing direct line-of-site access to equipment inside the station. Solid walls may prevent external vandalism such as gunshot damage.

16.5.4 Locks

All entrances to substation sites should be locked. Control buildings should have locked metal doors. All equipment located outdoors within the substation fence should have a provision for locking control cabinets, and operating handles should be padlocked. Padlocks should be true high-security locks, as recognized by Underwriters Laboratories, using restricted-duplication keys.

It is strongly recommended that a key-control program be adopted by the owner/operator to control the distribution of all keys. Each person in possession of a key should be accountable for the location and control of the keys at all times. All keys should be logged, indicating who has the key, to what the key gives them access, the date the key was issued and returned, and for what reason the key was returned. This log can provide crucial information in the case of an intrusion by a disgruntled employee. The log will also help determine if and when locks or cylinders should be changed.

16.5.5 Barriers

Access to energized equipment and bus may be of concern if the perimeter security measures are breached. Polycarbonate or other barriers on access ladders and structure legs can be used to provide additional barriers to access. Refer to NESC and Occupational Safety and Health Administration (OSHA) requirements. Driveway barriers (gates, guard rails, ditches, etc.) at the property line for long driveways can help limit unauthorized vehicular access to the substation property.

© 2003 by CRC Press LLC

All sewer and storm drains that are located inside the substation perimeter, with access from the outside, should be spiked or fitted with vertical grillwork to prevent entry. Manhole covers or openings should be located on the inside of the substation perimeter fence.

16.5.6 Lighting

The entire interior of the substation could be illuminated with dusk-to-dawn lighting that provides a minimum light level of 21.52 lx (2 fc). However, some caution is necessary here. Local residents may complain about this level of lighting at night, or local zoning ordinances may restrict or prohibit lighting altogether. Do not use sodium vapor lighting if the lighting is intended to assist with the identification of intruders or is to be used in conjunction with video scanning equipment. This type of light or any lighting fixture that produces a yellow or orange cast will interfere with attempts to identify the person, his clothing, and the description of the person's vehicle.

All wiring to the lighting posts should be in conduit or concealed to minimize tampering by an intruder. Areas outside the substation, but within the facility property, should also be considered for lighting to deter loitering.

16.5.7 Building Design

In general, most building materials provide adequate security protection. Selection of the type of building construction should be suitable for the level of security risk. Typically, features that should be included are steel doors with tamper-proof hinges and roof-mounted heating/air-conditioning units. Any wall openings (i.e., wall air conditioners) should have security bars over and around the unit. A building that is part of the perimeter fence line should be at least as secure as the fence. Construction of a building to enclose the substation or exposed equipment and materials can provide an additional layer of protection against intruders. For example, using trailers or buildings to enclose material stored at construction sites may deter theft.

16.5.8 Patrol

In areas where vandalism has been a chronic problem and at critical substations, judicious use of security patrol services could be considered. A partnership should be established with local law-enforcement agencies to facilitate the need for local patrols of selected substation facilities to deter vandalism and unauthorized entry. Security procedures should be established that specifically identify who handles security alarms and what the notification procedure is within the company and local law-enforcement agencies. Furthermore, during special or unusual occasions within the area of the station — e.g., labor disputes, the Olympics, or visits by heads of state — security procedures at critical substations may include identification checks by security patrols and limited access to the substation.

During a disaster, responding security or law-enforcement personnel may not be able to respond within an acceptable time due to transportation restrictions or higher priority emergencies. However, proper planning for disasters that might occur in a given location can help to protect a substation and preclude the need to deploy personnel during the event. Failure to recognize the impact of the following events and to institute precautions could result in numerous false alarms:

- Wind: Do not use security measures that might be activated by high winds.
- Animal: Numerous methods and products are available to assist with minimizing animal intrusion and reducing false alarms. Various methods and their effectiveness are discussed in IEEE Std. 1264-1993, Guide for Animal Deterrents for Electric Power Supply Substations.
- Seismic activity: Do not use devices that could be triggered by earth tremors.
- Vehicular, rail, or aircraft intrusion: While prudent siting methods can reduce the likelihood of such an event, substations at times must be contiguous to these modes of transportation as a matter of necessity. Alternative means of accessing the site can be helpful when the normal access is blocked by an intrusion. In addition, prudent planning for emergency response to the above should include the availability of items such as emergency lighting and temporary fencing materials.

© 2003 by CRC Press LLC

16.5.9 Signs

Signs should be installed on the perimeter fence to warn the public that:

- Alarm systems are providing security for the substation.
- Entry is not permitted.
- There is a danger of shock inside.

Include a sign with the station's location address and an emergency phone contact number.

16.5.10 Clear Areas and Safety Zones

Structures and poles should be kept a sufficient distance from the fence perimeter to minimize the potential use of the structure itself to scale the fence. Where practical, establish a 6-m (20 ft) to 9-m (30 ft) clear zone around the exterior of the perimeter fence. The clear zone will provide a clear field of view, making it easier to detect someone attempting to enter the facility illegally. Similarly, a double row of area fencing (enclaving) could be used to set up a clear zone inside the station to increase the difficulty of accessing the energized portions of the station.

16.5.11 Area Maintenance

The owner/operator should provide frequent and routine inspection of the station property. Maintaining the station property in a clean and orderly fashion establishes a level of care that the area is regularly patrolled, thus helping to discourage various groups from using the property as a meeting place. A regular preventive maintenance program should be developed to have security measures inspected regularly and deficiencies rectified before they lead to security problems.

Tagging by gangs requires special attention. Tagging may well indicate a heightened use of the property and should be dealt with immediately by working with law enforcement to identify the group and increase the physical security of the station. It is strongly recommended that tagging be removed as soon as local law-enforcement officials document it.

16.5.12 Intrusion Detection Systems

Numerous systems are now on the market to detect unlawful entry to a station. Sophisticated motion detection systems, video camera surveillance equipment, and building security systems are becoming more common. All of these systems are designed to provide early detection of an intruder so that law-enforcement personnel can be dispatched to the site to investigate.

Perimeter systems using photoelectric or laser sensing can be utilized to provide perimeter security. Overall motion-sensing devices may provide area security; but animals can trip these devices, which over time could render these devices ineffective.

Video systems can be deployed to monitor the perimeter of the substation, the entire substation area, or building interiors. They can have zoom lenses added to allow the reading of gauges located in the yard. They can be programmed to move to a specific combination of angle and zoom to provide a clear reading of a level or temperature gauge. They can also be moved to view any specific area of the station yard where illegal entry is suspected. Video systems are available that use microwave and infrared to activate a slow-scan video camera that can be alarmed and monitored remotely and automatically set to videotape the scene.

One of the more common methods used is an intrusion alarm on the control building door. These systems include, at a minimum, magnetic contacts on all the doors and have provisions to communicate to the operations center through the existing telephone network or SCADA system. They can also include a local siren or strobe light located on the outside of the building that is activated under an alarm condition. The systems should be capable of being activated or deactivated using an alphanumeric keypad, keyed switch, or card reader system located inside the building. All siren boxes and telephone connections should have contacts to initiate an alarm if they are tampered with.

© 2003 by CRC Press LLC

TABLE 16.1 Effectiveness of Security Methods — Urban Substations

Method	Number of Respondents Reporting to Survey	Respondents Reporting Method Not Effective (%)	Respondents Reporting Method Somewhat Effective to Effective (%)	Respondents Reporting Method Very Effective to Completely Effective (%)
Lights	31	7	77	16
Signs	27	7	78	15
Special locks	18	1	66	33
Solid wall	7	0	57	43
Security guard	5	0	60	40
Manned station	4	0	100	0
Optical alarms	4	0	75	25
Fence	4	0	75	25
Video camera	3	0	100	0
Special equipment (metal-clad, polymer)	3	0	67	33
Door alarm (to SCADA)	2	0	0	50
Alarm system	2	0	0	100
Motion detectors	1	0	0	100
Electronic protection	1	0	0	100

TABLE 16.2 Effectiveness of Security Methods — Suburban Substations

Method	Number of Respondents Reporting to Survey	Respondents Reporting Method Not Effective (%)	Respondents Reporting Method Somewhat Effective to Effective (%)	Respondents Reporting Method Very Effective to Completely Effective (%)
Lights	31	6	78	16
Signs	27	11	81	8
Special locks	19	5	69	26
Security guard	6	0	100	0
Fence	5	0	60	40
Solid wall	4	0	75	50
Manned station	4	0	100	0
Optical alarms	4	0	100	0
Video camera	3	0	100	0
Special equipment (metal-clad, polymer)	3	0	67	33
Door alarm (to SCADA)	2	0	0	100
Alarm system	2	0	0	100
Electronic protection	2	0	0	100
Motion detectors	1	0	0	100

Both IEEE and CIGRE have issued survey forms to their membership requesting data to determine the effectiveness of each type of security system. The CIGRE report is yet to be published. The results of the IEEE survey, first published in 1999, are shown here as Table 16.1 through Table 16.4.

16.5.13 System Solutions

The more sophisticated the security system, the more determined and organized the intruder has to be to gain entry. Tables 16.1 to 16.4 indicate that some security measures are much more effective than others, but none of them are 100% effective either singly or working in combination with one another, especially when an organized, well-trained, and determined terrorist group is considered. Under these

© 2003 by CRC Press LLC

TABLE 16.3 Effectiveness of Security Methods — Rural Substations

Method	Number of Respondents Reporting to Survey	Respondents Reporting Method Not Effective (%)	Respondents Reporting Method Somewhat Effective to Effective (%)	Respondents Reporting Method Very Effective to Completely Effective (%)
Lights	31	13	74	13
Signs	22	11	77	12
Special locks	17	6	65	29
Optical alarms	5	0	100	0
Fence	5	0	60	40
Passive and microwave systems	4	0	0	100
Security guard	4	25	50	25
Video camera	3	0	66	34
Manned station	3	0	100	0
Special equipment (metal-clad, polymer)	3	0	100	0
Alarm system	2	0	0	100
Door alarm (to SCADA)	1	0	0	100
Solid wall	1	0	100	0
Motion detectors	1	0	0	100
Electronic protection	1	0	0	100

TABLE 16.4 Effectiveness of Security Methods — Industrial/Commercial Substations

Method	Number of Respondents Reporting to Survey	Respondents Reporting Method Not Effective (%)	Respondents Reporting Method Somewhat Effective to Effective (%)	Respondents Reporting Method Very Effective to Completely Effective (%)
Lights	28	4	82	14
Signs	25	8	84	8
Special locks	15	7	73	20
Security guard	5	0	40	60
Solid wall	3	0	34	66
Manned station	3	0	100	0
Fence	3	0	66	34
Video camera	2	0	100	0
Optical alarms	2	0	100	0
Special equipment (metal-clad, polymer)	2	0	50	50
Door alarm (to SCADA)	1	0	0	100
Alarm system	1	0	0	100

circumstances and in the aftermath of 9-11, security measures must be refocused. The security of a substation must be viewed in the larger context of the security of the overall electric system. One approach is to "improve the security of the nation's power systems not by building fortresses around large, fragile facilities … but by strategically evolving a more resilient electric network." This is a network that "is designed not to make component failures impossible but to permit failures to occur without catastrophic effects on the essential functions of the system" [4].

To provide greater security to the system as a whole, utilities are looking at the following criteria.

© 2003 by CRC Press LLC

- Building a redundant network. The transmission system should remain stable during the outage of any two lines or substations anywhere in the system. This is a double-contingency (N-2) planning criterion.
- Maintaining spares for critical hard-to-replace pieces of equipment. This can include transformers, breakers, and even station structures.
- Earmarking spare equipment that is critical to the region and entering into agreements with other utilities in the region as to the storage, availability, and use of the equipment.
- Designing station yards to include wide internal roadways that provide easy access for mobile transformer equipment. Provide attachment points to minimize the time required to restore partial power to critical loads.
- Using underground feeders for critical loads.
- Using comparable design standards with neighboring utilities. The use of similar design standards will allow easier sharing of common equipment during emergencies.
- Locating distributed generation resources near critical loads or near critical stations that do not meet the N-2 double-contingency criteria.
- Placing new stations indoors using gas-insulated equipment and underground feeders.
- Considering alternative bus designs that provide higher levels of line protection and source-load redundancy.
- Spacing equipment farther apart to prevent collateral damage.

16.6 Security Assessment

16.6.1 Goal

The level of security to be applied at any station requires an assessment of the station's importance within the system and the type of intruder(s) that might pose a threat to the security of the station. The objective of any security system assessment program and implementation policy is to achieve the following:

- Determine what makes the station attractive and a potential target for damage.
- Mitigate or remove entirely the attractiveness.

Consider the following factors when determining the importance of each existing or new station in the system:

- Does the station serve critical or sensitive load such as local emergency services, military installations, or major industries?
- Is the station designed to provide double-contingency protection for all critical loads and lines?
- Does critical load served by this station have alternative sources of power available during emergencies?
- Will loss of this equipment cause area-wide voltage- or frequency-stability problems?
- What is the maximum length of time required to restore or replace damaged critical equipment in this station? Is this length of time acceptable? Can the customer tolerate loss of power for this length of time?

16.6.2 Existing Station Assessment

A great deal of information about the attractiveness of stations within the system can be determined from the service history of the existing stations. The designer can then use this knowledge when considering the appropriate level of security for a new station.

The security assessment form reproduced here (Figure 16.2) first appeared in IEEE Guide 1402 and can be used for assessing the security of each existing system station. Its importance cannot be stressed

© 2003 by CRC Press LLC

Security Assessment

Assessment completed by: _____

Date: _____

I. SUBSTATION LOCATION: _____

II. SUBSTATION CLASSIFICATION:

A. Type:

- ❑ Rural
- ❑ Urban
- ❑ Construction site
- ❑ New facility
- ❑ Existing facility
- ❑ Permanent facility
- ❑ Temporary facility
- ❑ Land bank

1. Construction type _____
2. Location _____
3. Distance to nearest occupied facility _____
4. Type of access road _____
5. Visibility/screening from view _____
6. Distance to regularly traveled road _____
7. Topography _____
8. Environmental consideration _____

B. Planned activity:

- ❑ Vacant
- ❑ Pre-construction
- ❑ Construction
- ❑ Operational

C. Equipment involved:

- ❑ None (unoccupied)
- ❑ Storage
- ❑ Construction equipment
- ❑ Energized facility

III. SITE RISK EVALUATION:

- Local demography
- Local economics
- Local crime rate/reported incidents
- Local building/construction aesthetics
- Labor conflicts/disputes
- Adjacent landowners (uninhabited)
- Adjacent landowners (inhabited)
- Substation value

IV. SITE MAINTENANCE:

A. General observation:

	Yes	No
Evidence of use	❑	❑
Bottles and/or cans	❑	❑
Refuse	❑	❑
Standing water	❑	❑

Comments/explanation: _____

_____

_____

FIGURE 16.2 Security assessment form.

© 2003 by CRC Press LLC

	Yes	No
B. Walls and fences:		
Damage	❑	❑
Graffiti	❑	❑
Broken strands or holes	❑	❑
Rust to galvanizing	❑	❑
Undermining	❑	❑
Evidence of attempted entry	❑	❑
Damage to locks or hinges	❑	❑

Comments/explanation: _____

_____

	Yes	No
C. Station yard:		
Refuse	❑	❑
Disturbed grading	❑	❑
Damage to grounding conductor or hardware	❑	❑
Graffiti on walls or equipment	❑	❑
Loose valves or evidence of tampering	❑	❑
Evidence of vandalism	❑	❑
Broken or chipped porcelain	❑	❑

Comments/explanation: _____

_____

	Yes	No
D. Control building:		
Attempted entry	❑	❑
Stolen or missing maintenance equipment	❑	❑
Evidence of occupancy	❑	❑
Tampered control equipment	❑	❑

Comments/explanation: _____

_____

Comments/other: _____

_____

Recommendations: _____

_____

_____

_____

FIGURE 16.2 (Continued)

© 2003 by CRC Press LLC

enough as part of an organized security policy. A plan for evaluating the effectiveness of any mitigating measures should be initiated. A history record should be kept for each substation to document the security option used, the problem the option is intended to mitigate, and the date of application. In addition, a record of the type of intrusions will help the designer evaluate the effectiveness of the security options chosen and identify weaknesses or shortcuts that an intruder has used to advantage. The record can also be used to evaluate the feasibility of future applications.

16.6.3 Responsibility for Security

Identification of the person or persons responsible for security implementation and administration is critical to the effectiveness of the plan. Defined levels of responsibility and specific tasks are required for each level. Each company should have one person in charge of facilities security. This individual should be responsible for assuring that a security plan is developed, implemented, regularly reviewed, and updated. Regular inspection of facilities to assure that security measures are in effect should be part of the security plan. Employee training and methods that enable employees to report irregularities or breaches of security should be instituted.

References

1. Badolato, E., Physical Security of Electric Power Systems, CMS, 2001; www.CMSINC.freeservers.com/physicalsecurityforelectricpowersystems.pdf.
2. Cantera, K., Inquiry Narrows in Games Blast, *Salt Lake Tribune*, Sep. 20, 2002.
3. Gehl, S., Electricity Infrastructure Security, Power Point presentation, EPRI, Palo Alto, CA, Nov. 28, 2001.
4. Regulatory Assistance Project, Electrical Energy Security: Policies for a Resilient Network, Part II, Gardiner, ME, Apr. 2002; www.rapmaine.org.

© 2003 by CRC Press LLC

17

Cyber Security of Substation Control and Diagnostic Systems

17.1 Introduction 17-1
17.2 Definitions and Terminology 17-2
17.3 Threats to the Security of Substation Systems 17-3
17.4 Substation Automation (SA) System Vulnerabilities 17-4
Slow Processors with Stringent Real-Time Constraints • Real-Time Operating Systems that Preclude Security • Insecure Communications Media • Open Protocols • Lack of Authentication • Low Priority for Cyber Security • Lack of Centralized System Administration • Large Numbers of Remote Devices
17.5 Measures to Enhance Cyber Security 17-6
Protecting Substation Systems against Cyber Intrusion • Detecting Cyber Intrusion • Responding to Cyber Intrusion
17.6 Devising a Security Policy 17-11
17.7 Future Measures 17-12
Encryption • Secure Real-Time Operating Systems • Test Beds • Incident Reporting Sites • Intrusion Detection and Firewalls • Secure Recovery • Developing Standards • Security Policies and Procedures
References 17-15

Joseph Weiss
KEMA, Inc.

Martin Delson
KEMA, Inc.

17.1 Introduction

The traditional concerns of electric utilities about the security of their substation assets have centered on protecting the substation from physical threats, both natural and human threats. With the significant exception of countries with civil strife, the main human threats were believed to be from an individual disgruntled employee, angry customer, or politically motivated vandal. In the case of all of these threats, the malfeasant had to be within or physically close to the substation to cause any damage. Traditionally, providing physical security meant having fences, locked gates, security cameras, SCADA-monitored intrusion alarms, and occasional visits by utility staff.

In contemporary times, the nature and the magnitude of the threat to substation assets have changed. The nature of the threat has changed because the equipment to monitor and control substation devices is now frequently connected by communication lines to wide-area networks potentially accessible by the general public. (See, for example, the discussions in Chapter 7, Substation Integration and Automation.) As a consequence, an individual seeking to damage utility assets can do so from places hundreds or thousands of kilometers distant as well as potentially impact multiple substations simultaneously.

0-8493-1703-7/03/$0.00+$1.50

© 2003 by CRC Press LLC

© 2003 by CRC Press LLC

TABLE 17.1 Traditional and Contemporary Threats to Utility Substations

Traditional Threats	Contemporary Threats
Threat is direct damage to the physical assets of the utility	Threat is damage to utility software systems, which may lead to damage to the physical assets
Threat is local	Threat originates from local or distant sources
Threat is from an individual	Threat may come from individuals, competitors, or well-funded and highly motivated organizations
An attack occurs at a single site	An attack may be unleashed simultaneously at many sites within many utilities and may be coordinated with cyber or physical attacks on other elements of key infrastructure
A successful attack causes immediate damage	A successful attack may be undetected, resulting in changes to utility software that lie dormant and are triggered to operate at some future time
A successful attack causes obvious damage	A utility may not know the nature of the damage to software caused by a successful attack
An attack is a single episode	As a result of an attack, software may be modified to cause continued damage
Restoration can safely take place after the attack	Since the attacker may still have access to the systems, restoration plans can be impacted

The magnitude of the threat has changed because organized and well-funded groups have publicly stated the goal of damaging elements of our critical infrastructure. Evidence shows that some organizations have been gathering information about public utilities in general, and specifically about SCADA technology [1]. Every day provides evidence of continuing probes of the electronic defenses of corporate computing networks. It is known that there have been episodes of probes specifically targeting the business systems of electric utilities [2]. However, because substations generally do not have firewalls or intrusion-detection systems, it is not possible to know if they are being targeted. There are several industry and government documents that have been issued on cyber security of SCADA systems and substation communications [3–10].

Table 17.1 summarizes the differences between the traditional threats to utility substation assets and contemporary threats. (The traditional threats have by no means evaporated; the new threats have to be seen as being in addition to, and not as a replacement of, the traditional threats.)

The previous chapter discussed protecting the physical security of the substation. This chapter addresses the nature of cyber threats, their potential to damage utility assets, and the means to protect against them, detect them when they do occur, and recover from them.

17.2 Definitions and Terminology

- Cyber security: Security (q.v.) from threats conveyed by computer or computer terminals; also, the protection of other physical assets from modification or damage from accidental or malicious misuse of computer-based control facilities.
- Default password: A password is a sequence of characters that one must input to gain access to a file, application, or computer system. A "default password" is the password that was implemented by the supplier of the application or system.
- DNP3: Distributed network protocol, a nonproprietary communications protocol (q.v.) designed to optimize the transmission of data-acquisition information and control commands from one computer to another [11].
- Firewall: A device that implements security policies to keep a network safe from unwanted data traffic. It can operate by simply filtering out unauthorized data packets based on their addresses, or it may involve more complex inspection of the sequence of messages to determine whether the communications are legitimate. A firewall can also be used as a relay between two networks, breaking the direct connection to outside parties.

© 2003 by CRC Press LLC

- IDS: Intrusion detection system, a device that monitors the traffic on a communications line with the aim of detecting and reporting unauthorized users of the facilities. IDSs are programmed to identify and track specific patterns of activity.
- IEC: International Electrotechnical Commission, an international organization whose mission is to prepare and publish standards for all electrical, electronic, and related technologies.
- IED: Intelligent electronic device, any device incorporating one or more processors with the capability to receive or send data/control from or to an external source (e.g., electronic multifunction meters, digital relays, controllers) [12].
- Port: A communications pathway into or out of a computer or networked device such as a server. Ports are often numbered and associated with specific application programs. Well-known applications have standard port numbers; for example, port 80 is used for HTTP traffic (Web traffic).
- Protocol: A formal set of conventions governing the format and relative timing of message exchange between two communications terminals; a strict procedure required to initiate and maintain communication [13].
- Remote access: Access to a control system or IED by a user whose operations terminal is not directly connected to the control systems or IED. Applications using remote access include Telnet, SSH, and remote desktop software such as pcAnywhere™, Exceed®, DameWare, and VNC. Transport mechanisms typical of remote access include dial-up modem, frame relay, ISDN, Internet, and wireless technologies.
- RTU: Remote terminal unit, the entire complement of devices, functional modules, and assemblies that are electrically interconnected to effect the remote station supervisory functions. The equipment includes the interface with the communication channel but does not include the interconnecting channel [14].
- Security: The protection of computer hardware and software from accidental or malicious access, use, modification, destruction, or disclosure [15].

17.3 Threats to the Security of Substation Systems

Investigations of threats to corporate computer hardware and software systems traditionally have shown that the greatest number of attacks come from internal sources [16]. Substation control systems and IEDs are different in that information about them is less well known to the general public. However, the hardware, software, architecture, and communication protocols for substations are well known to the utilities, equipment suppliers, contractors, and consultants throughout the industry. Often, the suppliers of hardware, software, and services to the utility industry share the same level of trust and access as the utility individuals themselves. Consequently, the concept of an insider is even more encompassing. A utility employee knows how to access the utility's computer systems to gather information or cause damage, and also has the necessary access rights (keys and passwords). The utility must protect itself against disgruntled employees who seek to cause damage as well as employees who are motivated by the prospect of financial gain. Computer-based systems at substations have data of value to a utility's competitors as well as data of value to the competitors of utility customers (e.g., the electric load of an industrial plant). Corporate employees have been bribed in the past to provide interested parties with valuable information; we have to expect that this situation will also apply to utility employees with access to substation systems. Furthermore, we cannot rule out the possibility of an employee being bribed or blackmailed to cause physical damage, or to disclose secrets that will allow other parties to cause damage.

A second potential threat comes from employees of suppliers of substation equipment. These employees also have the knowledge that enables them to access or damage substation assets. And often they have access as well. One access path is from the diagnostic port of substation monitoring and control equipment. (See Chapter 7, Substation Integration and Automation.) It is often the case that the manufacturer

© 2003 by CRC Press LLC

of a substation device has the ability to establish a link with the device for the purpose of performing diagnostics via telephone and modem (either via the Internet or else by calling the device using the public switched telephone network). An unscrupulous employee of the manufacturer could use this link to cause damage or gather confidential information. Additionally, an open link can be accessed by an unscrupulous hacker to obtain unauthorized access to a system. This has occurred frequently in other industries. Another pathway for employees of the utility or of equipment suppliers to illicitly access computer-based substation equipment is via the communications paths into the substation. Ensuring the security of these communications paths is the subject of Sections 8 and 10 of Chapter 15, Substation Communications.

A third threat is from the general public. The potential intruder might be a hacker who is simply browsing and probing for weak links or who possibly wants to demonstrate his prowess at penetrating corporate defenses. Or the threat might originate from an individual who has some grievance against the utility or against society in general and is motivated to cause some damage. The utility should not underestimate the motivation of an individual outsider or amount of time that someone might dedicate to investigating vulnerabilities in the utility's defenses.

A fourth threat is posed by criminals who attempt to extort money (by threatening to do damage) or to gain access to confidential corporate records, such as maintained in the customer database, for sale or use.

The fifth, and arguably the most serious, threat is from terrorists or hostile foreign powers. These antagonists have the resources to mount a serious attack. Moreover, they can be quite knowledgeable, since the computer-based systems that outfit a substation are sold worldwide with minimal export restrictions, and documentation and operational training is provided to the purchaser. The danger from an organized hostile power is multiplied by the likelihood that an attack, if mounted, would occur in many places simultaneously and would presumably be coupled with other cyber, physical, or biological attacks aimed at crippling the response capabilities.

17.4 Substation Automation (SA) System Vulnerabilities

Conventional computer systems have been the object of a wide variety of cyber attacks. These include an exploitation of programming errors in operating systems and application software, guessing or cracking user passwords, taking advantage of system installations that leave extraneous services and open ports open to attack, and improperly configured firewalls that do not exclude unauthorized communications. In addition to manifesting these common vulnerabilities, the control and diagnostic systems in substations have a number of special vulnerabilities to their cyber security.

This section will not attempt to discuss the manifold vulnerabilities of conventional computer systems, which are well documented in other sources [17]. Instead, this section describes some of the characteristics of substation control and diagnostic systems that give rise to special vulnerabilities. Section 17.5 will then cover how the user can reduce the threats to cyber security and describe some of the characteristics of substation systems that make it difficult to apply conventional protective measures.

17.4.1 Slow Processors with Stringent Real-Time Constraints

One way to strengthen the privacy and authenticity of messages transmitted across insecure channels is to use encryption. The encryption techniques that are currently approved by the U.S. National Institute of Standards and Technology use block encryption [18]. This encryption technique is too resource-intensive for most current IEDs and many existing SA systems. Many substation communications channels do not have sufficient bandwidth for the transmission of longer block-encrypted messages. Furthermore, vendor testing has demonstrated that utilizing existing encryption technology would significantly slow down processing and inhibit timing functions. The remote terminal units (RTUs) and intelligent electronic devices (IEDs) in substations in some cases use early microprocessor technology. They have limited

© 2003 by CRC Press LLC

memory and often have to meet stringent time constraints on their communications. It is often not feasible to require that these RTUs or IEDs enhance communications security by encrypting the data messages because their microprocessors do not have the processing capability to support the additional computational burden.

17.4.2 Real-Time Operating Systems that Preclude Security

Another security risk is posed by the design of the real-time operating systems that are embedded within many IEDs. At the present time, the suppliers of these embedded operating systems have not been faced with the need to meet the requirements for secure communications. Their software systems have been designed to operate in an environment poor in computing resources but where there is a need for deterministic response to events. Such systems are configured to prioritize the execution of tasks and communications, but not to implement information security policies. The embedded operating systems cannot make the requisite calls to authenticate the other party, encrypt data before sending it, and decrypt it upon reception.

17.4.3 Insecure Communications Media

The data messages that substation IEDs exchange with the outside world are often transmitted over media that are potentially open to eavesdropping or active intrusion. Dial-in lines are common; IEDs will accept phone calls from anyone who knows or discovers their phone number. Many IEDs are IP (Internet protocol)-enabled, i.e., they can be addressed by computers connected to the Internet.

In addition, much of the data traffic to and from a substation goes over wireless networks. (See Chapter 15, Substation Communications.) Intruders with the proper equipment can record and interpret data exchanges and can insert their own messages to control power system devices. Other data traffic goes over leased lines, passing through telephone-company switching centers where they are subject to monitoring or interference. In this latter case, the security of substation operations can be no better than the security of the switching center of the telephone company.

Furthermore, the electronic equipment at substations frequently employs remote desktop applications (such as X-Terminal, pcAnywhere™, and Exceed®) that are specifically designed to allow users at remote locations to interact with the equipment as if they were present in the substation and directly at the local keyboard. There are many vulnerabilities to these remote-access programs. Substations are seldom configured with firewalls to help safeguard the systems from intrusion, and intrusion detection systems are not available for substation environments to alert the system operator when intrusions occur. (See Section 17.5.2.)

17.4.4 Open Protocols

The communications protocols used most frequently within substations are well known. For communications among IEDs, Modbus, Modbus-Plus, and DNP3 are the most frequently used protocols. These protocols are well documented and used worldwide. Many protocols have been used for communications between the substation and the utility's control center. In the past, these protocols were often vendor specific and proprietary, but in recent years the majority of implementations have been with IEC 60870-5 (in Europe), DNP3 (in North America), and to a much more limited extent, IEC 60870-6 TASE.2 (also called ICCP). These protocols are all nonproprietary, well documented, and available to the general public. Security was not a factor when these protocols were designed, and they currently contain no features to ensure the privacy or authenticity of the data transmitted.

Moreover, devices called "RTU test sets" are commercially available. An RTU test set is typically a portable device with a communications port that interfaces with an RTU or IED. The test set has a user interface that interprets the messages being sent to and from an RTU or an IED and that allows the user to define and issue commands to the substation device. Tabletop demonstrations have shown that an

© 2003 by CRC Press LLC

intruder can patch into the communications channel to a substation and use a test set to operate devices at the substation. Depending on how the protocol has been implemented in the SCADA system, it is possible for an intruder to operate a device using a test set without the SCADA system recognizing the intrusion.

17.4.5 Lack of Authentication

Communication protocols in current use do not provide a secure means for data-exchanging systems to be certain of each other's identity. Intruders who gain access to a communications line to a controllable device can execute a control as if they were an authorized user. Intruders could also mimic a data source and substitute invalid data. In most cases, the program receiving the data performs very little effective data-validity checking to detect this kind of interference.

17.4.6 Low Priority for Cyber Security

Another characteristic of SA systems that adds to their vulnerability to cyber intrusion is managerial rather than technical. Owners of the systems often do not assign a high priority to cyber security. Utilities often zealously guard their operational systems from perceived interference from corporate information technology (IT) staff. Yet it is the corporate IT staff that often is most aware of the cyber threats to computer systems and most knowledgeable about the ways to protect these systems. Such knowledge is less frequently present among the staff responsible for SA systems.

Maintenance responsibility for substation equipment is often divided among different staff personnel, e.g., relay technicians for relay IEDs, substation technicians for transformer-monitoring IEDs, and communications technicians for RTUs. There is often no single individual with authority to oversee the cyber security of these various systems. As a corollary, there seldom are sufficient resources dedicated to providing security. Finally, because the subject of cyber security has, until recently, not received much attention, security-related policies and procedures very often need to be developed, approved, and put into practice.

17.4.7 Lack of Centralized System Administration

Unlike the IT domain, where there is a central system administrator to designate and track authorized users, SA system users are often their own system administrators. As such, they have the authority to perform all security functions. This often results in providing access to SA systems for personnel who have no reason to have such access. Additionally, the system administration function allows what is known as "root access." A user with root access has access to all critical functions, including assigning passwords, assigning log-in IDs, configuring the system, and adding or deleting software. These can lead to significant cyber vulnerabilities.

17.4.8 Large Numbers of Remote Devices

A typical utility has from several dozen to several hundred substations at geographically dispersed locations, and each automated substation typically has many IEDs. Therefore, there is a high cost to implement any solution that requires upgrading, reprogramming, or replacing the IEDs.

17.5 Measures to Enhance Cyber Security

The principles for enhancing the cyber security of control and diagnostic systems at substations are the same as those for other corporate computer systems: (1) prevent cyber intrusion where you can; (2) detect intrusion where it could not be prevented; (3) recover from an intrusion after it was detected; and (4) improve the preventive measures on the basis of experience.

© 2003 by CRC Press LLC

17.5.1 Protecting Substation Systems against Cyber Intrusion

There are two avenues of potential cyber intrusion to the computer-based equipment in a substation: those originating from the users on the corporate network and those originating outside. These are treated in separate sections below.

17.5.1.1 Cyber Intrusion from Inside the Corporate Network

To the extent that substation control and monitoring systems are connected to a utility's corporate wide-area network, a large potential threat to these systems is derived from unauthorized users on the corporate network. Consequently, the first step in securing substation assets should be to ensure that the corporate network is made as secure as possible. The important measures are well known. They include the following:

- Removing all default user IDs and default passwords on installed systems
- Ensuring that all accounts have strong passwords
- Closing unneeded ports and disabling unneeded services
- Installing security patches from software suppliers in a timely manner
- Removing all sample scripts in browsers
- Implementing firewalls with carefully thought-out rules to exclude all unauthorized traffic
- Implementing intrusion detection systems and then logging and investigating all suspicious activity

The details of these and further measures to protect the corporate network are the subject of much active discussion elsewhere [19, 20] and will not be covered in this volume.

Even when measures are taken to enhance the cyber security of the corporate network, it would be foolish to assume that no intrusion is possible. Therefore, additional measures should be taken to further protect substation systems from successful penetrations onto the corporate network. These measures will also help protect substations from malevolent activity from employees who have access to the corporate network.

- The most important measure is one of the simplest, i.e., ensuring that all default passwords have been removed from all substation systems and that there are no accounts without any password. (This may not be possible, however, if the equipment supplier has "burned-in" the default password into the system firmware.)
- A password policy should be implemented to ensure that user passwords are not easily guessable. However, passwords that are difficult to guess are also difficult to remember. Users who post their passwords on the terminal of the system being protected defeat the purpose of the password. Users should be given instruction in ways to generate "difficult" passwords that they can remember without difficulty.
- A procedure should be in place to immediately terminate a password as soon as its owner leaves employment or changes job assignments.
- Different sets of privileges should be established for different classes of users. For example, some users should be allowed only to view historical substation data. Other users might be permitted to view only real-time data. Operators should be given only control privileges, and relay engineers should be given only the authority to change relay settings.
- The utility might consider requiring a stricter measure of authentication of the user before permitting access to a substation system. For example, the utility might want to consider requiring presentation of a smart card or instituting biometric identification (such as a personal fingerprint reader) for users desiring access to a system. The costs of purchasing the hardware to implement these protective measures is not high, but the administrative costs might make such measures impractical. As is often the case with issues of security, the utility must weigh the costs of the measure against the value of the asset being protected and the perceived risk of damage.

© 2003 by CRC Press LLC

17.5.1.2 Cyber Intrusion from Outside the Corporate Network

The possibility of intrusion into the substation by outsiders gaining direct access to substation devices through unprotected communications channels raises new challenges to the cyber security of substation systems. There are two main communication paths into the substation that are potential targets for eavesdropping or intrusion: the SCADA communication lines and dial-up lines to IEDs.

17.5.1.2.1 SCADA Communication Lines

The SCADA communication line is the communications link between the utility's control center and the RTU at the substation. This line carries real-time data from substation devices to the utility dispatchers at the control center, and it controls messages from the dispatchers back to the substation. (For substations equipped for substation automation, a data concentrator or a substation-automation host processor will play the role of the RTU in sending substation data to the control center and in responding to the dispatcher's control commands.)

A variety of media are used to connect the substation RTU with the control center: power line, leased lines, microwave, multiple-address radio, satellite-based communications, fiber-optic cable, etc. The topic is discussed in detail in Chapter 15, Substation Communications. It is quite common for communications from control center to substation to use different media along different segments of the path. Some of these media, especially the wireless ones, are open to eavesdropping or active intrusion. At least one case has been reported in which an intruder used radio technology to commandeer SCADA communications and sabotage the system (in this case, a wastewater treatment facility) [21]. Of the many alternatives, using fiber optics offers the most security against potential intruders to SCADA communications. Refer to Sections 8 and 10 of Chapter 15 for a thorough discussion of measures to protect SCADA communications.

17.5.1.2.2 Dial-Up Lines to IEDs

The other path to substation control and monitoring devices is via dial-up lines directly to intelligent electronic devices (IEDs). As discussed in Chapter 7, Substation Integration and Automation, IEDs are devices that intrinsically support two-way communications. IEDs are frequently configured so a user can dial up the IED. Once the user has logged on to the IED, the user can use the connection to:

- Acquire data that the IED has stored
- Change the parameters of the IED (e.g., the settings of a protective relay)
- Perform diagnostics on the IED
- Control the power system device connected to the IED (e.g., operate a circuit breaker)

These dial-up lines can offer a simple path for a knowledgeable intruder into the substation. There are three lines of defense that a utility can take: (a) strengthen the authentication of the user, (b) encrypt communications with the IED, or (c) eliminate the dial-up lines.

17.5.1.2.2.1 Strengthening the Authentication of the User — "Authentication" refers to the process of ensuring that the prospective user of the IED is the person he claims to be. As the very first step, the utility should ensure that the default passwords originally supplied with the IEDs are changed and that a set of strong passwords are implemented.

A simple second step would be to confirm that the telephone call comes from a recognized source. For this purpose, it is not sufficient to get the user ID of the caller and confirm that it is on an approved list. Hackers are often familiar with telephone technology, and the caller ID can be changed or disguised. A more secure approach would be for all dial-in calls to be received by a dial-back device at the substation (also known as a call-back device.) The device receives the incoming call, requires that the caller enter a user ID and password, searches an internal list for the telephone number that the call should be made from, terminates the incoming call, and dials back the caller at the phone number found in the list. In essence, the incoming call is replaced by an outgoing call. It should be noted that the use of dial-back is not foolproof, however. According to one source [22]:

© 2003 by CRC Press LLC

There are several ways an intruder can defeat the protection offered by a dial-back modem. For example, if the same modem and line are used for returning the call to the user, the intruder may be able to maintain control of the line while fooling the modem into acting as though the user had hung up after the original call. The modem would then place the return call, but the intruder's equipment would be mimicking the operation of the telephone system and the return call would be connected to the intruder's modem. Alternatively, the intruder could modify the telephone switch setup to direct the return call to the intruder's telephone number regardless of the pre-arranged number stored in the modem.

To defend against this threat, the report recommends that the utility consider the use of a separate line for the call back. The telephone switch must also be carefully protected, since the security of the substation depends on the integrity of the telephone switch.

17.5.1.2.2.2 Encrypting Communications — A second approach to enhancing the security of communications to IEDs would be to encrypt the messages between the user and the IED. Encryption could help ensure that only users in possession of the secret key would be able to interpret data from the IED and change IED parameters. (As an alternative to encryption, the utility also has the option of embedding a "secure hash" in messages. This technique entails computing a special code that is added to the message. The code is a function of the contents of the message and of a secret key that should be known only to the user and the IED. Computing a "secure hash" is much less computationally intensive than encrypting the whole message.)

At the time of publication, encrypting the communications to IEDs does not appear to be practical. In IED design, the two paramount factors are performance and cost. The high computational requirements of processors to implement some encryption schemes make encryption impractical for the low-performance microprocessors currently used in many IEDs. Moreover, the suppliers of IEDs are reluctant to add functions that will raise the cost. In addition, the standards community has not yet agreed upon a unified approach to encryption. Consequently, at the current time, it would take a special effort on the part of a utility to encrypt messages to and from IEDs. The cost of such an effort would make this infeasible in most existing implementations.

Nevertheless, there are active developments along several fronts that may cause this situation to change. Higher performance microprocessors are being manufactured at ever-lower cost, reducing the cost and performance penalties of encryption. In addition, several groups are making progress in defining encryption standards for the communication protocols used in substations, including IEC Technical Committee 57 Working Groups 7 and 15 and the DNP Users Group. The IEC 61850 protocol is based upon international standard communication profiles, which include provisions for communications security. While the final security architecture has not been defined at the time of this writing, 61850 includes provisions for security features at the application layer and in the protocol stack that will be added to the profile in its final form. Once the industry has agreed upon a standard technique for encrypting messages, the IED manufacturers can plan on realizing economies of scale. We can be fairly confident that if there is a demand for encryption of IED communications, and industry-wide agreement on the approach, then the IED manufacturers will find it possible to embed the algorithm in the processor of the IEDs at little incremental cost.

An alternative that can be considered in the meantime is the use of an external device that is interposed between the dial-in modem and the serial cable to the IED. Devices are commercially available that encrypt messages. (The encryption is done using a stream cipher, a technique that can operate while the message is in the process of being transferred.) Using such an in-line encrypting device provides the privacy and authentication of encryption at reasonable cost without requiring a change in the IED processor. The penalty in performance is the delay of a few bytes per message exchange. Adding an in-line encrypting device does add additional equipment to the substation, with the concomitant increase in complexity, impact on reliability, and additional administrative burden. However, this is not expected to be significant. It should be noted that the encryption does not validate the data. It assumes the data to be trusted and encrypts the data. If the data are corrupted prior to reaching the encryption device, corrupted data will be sent in an encrypted manner.

© 2003 by CRC Press LLC

17.5.1.2.2.3 Eliminating the Dial-Up Lines — Another approach to securing the communications to IEDs would be to eliminate dial-up lines into the substation entirely. This approach is indeed being followed by several utilities that place a high value on cyber security.

Under this approach, all communications to the IEDs originate from within the secure network and are transmitted through and mediated by the data concentrator or substation host processor at the substation. The data concentrator or substation processor forwards the message to the appropriate IED and routes the response back to the original caller. (In the terminology of Chapter 7, Substation Integration and Automation, these messages use "pass through" communications.) No communications to the substation are permitted that originate outside the secure utility network. Communications to the substation IEDs would be even more secure if, as suggested earlier, fiber-optic lines were used for substation communications.

The security of this approach is dependent, of course, on the success of the utility in preserving the security of its internal network. That issue is beyond the scope of this chapter.

17.5.2 Detecting Cyber Intrusion

One of the axioms of cyber security is that while it is extremely important to try to prevent intrusions into one's systems and databases, it is essential that intrusions be detected if they do occur. An intruder who gains control of a substation computer can modify the computer code or insert a new program. The new software can be programmed to quietly gather data (possibly including the log-on passwords of legitimate users) and send the data to the intruder at a later time. It can be programmed to operate power system devices at some future time or upon the recognition of a future event. It can set up a mechanism (sometimes called a "backdoor") that will allow the intruder to easily gain access at a future time.

If no obvious damage was done at the time of the intrusion, it can be very difficult to detect that the software has been modified. For example, if the goal of the intrusion was to gain unauthorized access to utility data, the fact that another party is reading confidential data may never be noticed. Even when the intrusion does result in damage (e.g., intentionally opening a circuit breaker on a critical circuit), it may not be at all obvious that the false operation was due to a security breach rather than some other failure (e.g., a voltage transient, a relay failure, or a software bug).

For these reasons, it is important to strive to detect intrusions when they occur. To this end, a number of IT security system manufacturers have developed intrusion detection systems (IDS). These systems are designed to recognize intrusions based on a variety of factors, including primarily (a) communications attempted from unauthorized or unusual addresses and (b) an unusual pattern of activity. They generate logs of suspicious events. The owners of the systems then have to inspect the logs manually and determine which represent true intrusions and which are false alarms.

Unfortunately, there is no easy definition of what kinds of activity should be classified as "unusual" and investigated further. To make the situation more difficult, hackers have learned to disguise their network probes so they do not arouse suspicion. In addition, it should be recognized that there is as much a danger of having too many events flagged as suspicious as having too few. Users will soon learn to ignore the output of an intrusion detection system that announces too many spurious events. (There are outside organizations, however, that offer the service of studying the output of IDSs and reporting the results to the owner. They will also help the system owner to tune the parameters of the IDS and to incorporate stronger protective features in the network to be safeguarded.)

Making matters more difficult, most intrusion detection systems have been developed for corporate networks with publicly accessible Internet services. Very little research has been done to investigate what would constitute "unusual" activity in a SCADA environment. In general, SA and other control systems do not have logging functions to identify who is attempting to obtain access to these systems. Efforts are underway in the commercial arena and with the National SCADA test bed at DOE's Idaho National Engineering and Environmental Laboratory (INEEL) to develop intrusion-detection capabilities for control systems.

© 2003 by CRC Press LLC

In summary, the art of detecting intrusions into substation control and diagnostic systems is still in its infancy. Until dependable automatic tools are developed, system owners will have to place their major efforts in two areas: (a) preventing intrusions from occurring and (b) recovering from them when they occur.

17.5.3 Responding to Cyber Intrusion

The "three Rs" of the response to cyber intrusion are recording, reporting, and restoring.

Theoretically, it would be desirable to record all data communications into and out of all substation devices. In that manner, if an intruder successfully attacks the system, the recordings could be used to determine what technique the intruder used to modify the system, and then close that particular vulnerability. Secondly, the recording would be invaluable in trying to identify the intruder. In addition, if the recording is made in a way that is demonstrably inalterable, then it might be admissible as evidence in court if the intruder is apprehended. However, due to the high frequency of SCADA communications, the low cost of substation communications equipment, and the fact that the substations are distant from corporate security staff, it may be impractical to record all communications.

In practice, although theoretically desirable, system owners will probably defer any attempts to record substation data communications until (a) storage media are developed that are fast, voluminous, and inexpensive, or (b) SCADA-oriented intrusion detection systems are developed that can filter out the nonsuspicious usual traffic and record only the deviant patterns. But even if the communications sequence responsible for an intrusion is neither detected nor recorded when it occurs, nevertheless it is essential that procedures be developed for the restoration of service after a cyber attack.

It is extremely important that the utility maintain backups of the software of all programmable substation units and documentation regarding the standard parameters and settings of all IEDs. These backups and documentation should be maintained in a secure storage, not normally accessible to the staff who work at the substation. It would appear advisable that these backups be kept in a location other than the substation itself to lower the amount of damage that could be done by a malicious insider.

After the utility concludes that a particular programmable device has been compromised (indeed, even if it just suspects a successful intrusion), the software should be reloaded from the secure backup. If the settings on an IED had been illicitly changed, the original settings must be restored. Unless the nature of the breach of security is known and can be repaired, the utility should seriously consider taking the device off line or otherwise making it inaccessible to prevent a future exploitation of the same vulnerability.

17.6 Devising a Security Policy

In order to put the recommendations of this chapter into practice, a utility should establish and implement a security policy. The policy for the cyber security of the systems in a substation should be a component of a larger plan for the cyber security of the entirety of a utility's computer-based systems. (This is vitally important since, as was emphasized earlier, the largest vulnerability of the control and diagnostic systems at a substation arises through the connection of these systems to the corporate wide-area network and, through the corporate network, to the Internet and the outside world.)

The policy for the cyber security of a utility's computer systems should also be correlated with a plan for ensuring the physical security of the utility's assets. (Some of the components of a plan for cyber security will be very similar to the analogous plan for physical security.) The utility should consider the issues outlined below when devising the security policy. Further, more detailed suggestions about the elements of a cyber security plan can be found in many published sources [19, 20].

- Assets

  What are the assets of the substation that the policy seeks to protect? (As a corollary, what assets are not protected by the policy?)

  What level of protection should be given to each asset (device, control system, communications system, database)?

  What must a user do or have to gain access to each asset?

© 2003 by CRC Press LLC

- Threats

  What are the threats to the security of the substation that the policy seeks to address? (Also, what threats are not addressed?)
  What is the damage that can result from each of the threats?
  What measures should be taken to protect against each threat? (Several alternatives may be considered.)
  What should be done to test the protective measures that have been taken? (Should an outside organization be employed to probe for weaknesses?)
  Who will monitor the changing nature of cyber threats and update the security policy accordingly?

- Threat detection

  What measures will be taken to detect intrusion? (Should an outside party be employed to analyze intrusion records?)
  What should be done if an intrusion is suspected?
  Who should an intrusion be reported to?
  What records should be kept?

- Incident response

  What immediate steps should be taken in response to each type of incident?
  What role will law enforcement play?
  How will the incident be reported to regulatory agencies, reliability councils, or cyber incident recording centers?
  What improvements must be made (to policy, to documentation, to training, etc.) as a result of lessons learned?

- Training and documentation

  What are the training programs for security (general security awareness, access procedures, restoration procedures)?
  What are the plans for practicing restoration, and how often will they be applied?
  What are the plans for supporting manual operation if control systems suffer long-term damage?
  Who will issue the documentation for the restoration procedures, and where will the documents be kept?

- Administration

  Who has the ultimate responsibility for cyber security at the utility?
  What are the responsibilities of each relevant job category?
  What are the potential consequences for staff of a violation of policy?
  How will compliance with the policy be monitored? (Should an outside organization be used?)
  How will the security policy be revised?

- Software management

  How will software updates be authenticated, tested, and installed?
  How will security patches be tested and installed?
  How will system backups be secured?
  What are the rules for acceptable passwords?

17.7 Future Measures

It should be clear from the previous discussion that, at the time of publishing, the technology is not yet mature enough to ensure the cyber security of control and diagnostic systems at substations. To a certain extent, a utility will be forced to make do with halfway measures. It is not practical to eliminate all security

© 2003 by CRC Press LLC

risks or to close all security vulnerabilities. The utility must evaluate what assets have the highest value and deserve the greatest protective effort.

Strenuous efforts are being taken in several areas to improve the defenses against cyber threats. It will be worthwhile for the utility to monitor these developments and update their security policies to take advantage of technological advances. (As was the case with the arms race, however, it must be anticipated that adversaries will develop new attack strategies as current vulnerabilities are closed; it is important that the utility monitor and respond to the changing nature of the threat as well.) This chapter describes some current developments that will make it easier to provide for the cyber security of substation systems, and it indicates where further work is needed.

17.7.1 Encryption

The various standards groups who are responsible for defining the protocols used in substation communications are actively working on defining the standards for encryption. Concurrently, IEDs are being manufactured with faster microprocessors and more memory, making it feasible to implement encryption in embedded processors. Furthermore, the channel capacity of communications lines to substations is growing, making the performance penalty for encryption less significant. As a result of these trends, it will soon be feasible to encrypt communications between control centers and substations. In addition, if there is demand for the function from the user community, it may be possible to implement encryption of communications among IEDs within a substation at acceptable cost. SCADA test beds at the DOE National Laboratories are identifying which security technology is appropriate for specific applications. It is conceivable that encryption may not be necessary.

17.7.2 Secure Real-Time Operating Systems

An ancillary, but important function is to develop real-time operating systems with security policies. This will enable calls to be made to authorize, authenticate the other party, and encrypt and decrypt data.

17.7.3 Test Beds

It is difficult for a utility, unaided, to discover all the security vulnerabilities in the various systems installed at a substation. In recognition of the need for a more concerted effort, the U.S. government has recently started to dedicate resources to investigate the security vulnerabilities of elements of the critical infrastructure. Several national laboratories have taken on the task of establishing the National SCADA Test Bed, where the SCADA systems in common use can be studied, their vulnerabilities discovered, and remedies implemented. It is expected that the role of the test beds will be expanded to include the control and diagnostic systems commonly used in substations.

17.7.4 Incident Reporting Sites

For several years, the CERT Coordination Center (CERT/CC), operated by Carnegie Mellon University, has served as a storehouse for reports of security incidents. CERT declares, "Our work involves handling computer security incidents and vulnerabilities, publishing security alerts, researching long-term changes in networked systems, and developing information and training to help you improve security at your site."

The CERT Web site (http://www.cert.org/) has a form that allows the manager of a computer system or network to report a security incident. CERT also publishes an advisory of cyber security problems, which is e-mailed to a very large number of destinations. Utilities should be encouraged to make use of the CERT incident reporting service to report security incidents, and thereby inform others of common vulnerabilities. (CERT promises to keep the source of the information confidential.)

At the current time, the incidents maintained on the CERT database are almost entirely traditional computer problems; problems with SCADA and substation automation systems have not been identified

© 2003 by CRC Press LLC

in their advisories. However, there have been many cases of intentional and unintentional cyber impacts on control systems in various industries, including electric power, although very few have been formally documented [23, 24]. These impacts range from design flaws and improper procedures to actual hacking. Impacts have ranged from minimal to environmental damage and even deaths. Consequently, there is a need to develop a similar service focusing on the cyber security incidents relating to real-time control systems at utilities and industrial process control systems.

17.7.5 Intrusion Detection and Firewalls

It is important to be able to reliably recognize an intrusion into substation computer systems and networks. Currently, almost all intrusion detection systems focus on traditional computer networks and have not been adapted for the special circumstances characterizing the systems found at substations. Work is currently in progress to use neural networks to define a "usual" state of activity and to recognize an intrusion by the change in the patterns. At the current time, these efforts have not yet been proven to be effective. It is hoped that these developments will prove successful and that intrusion detection systems appropriate for utility application will become available.

Firewalls can protect the network by limiting information from accepted addresses only. However, firewall technology is currently not capable of inspecting data packets and making go/no-go decisions on passing data to the control system. Consequently, all data that appear to be from an accepted address are passed. This becomes an issue because certain malformed UDP packets have been demonstrated to cause fault conditions in specific control systems [25].

17.7.6 Secure Recovery

If a computer-based system has been compromised, the process of restoring the system to its pristine state is lengthy, labor-intensive, and error-prone. It is especially difficult when the software has been modified since it was first installed. The utility must answer the difficult questions about when the system was compromised, and whether the software that is being restored perhaps contains the infected code. Developments that would allow a quick and reliable restoration of uninfected system software would be of great value to the operators of substation control and diagnostic systems.

17.7.7 Developing Standards

The IEEE Power Engineering Society (PES) standards have been developed for performance and not cyber security requirements. To rectify this oversight, on July 22, 2002, the IEEE PES Standards Coordinating Council created a task force to do the following:

- Survey all IEEE PES standards (both existing and those under development) for electronic security issues
- Survey legislative and regulatory electronic security rules that may affect IEEE PES standards
- Survey other IEEE and industry standards for electronic security sections that may affect IEEE PES standards

IEC Technical Committee 57 Working Groups 7 and 15 are addressing IEC 60870-6 TASE.2 ("ICCP"). ISA has recently established a new standards committee for process controls cyber security, ISA SP99. The Open Group's Real-Time Security Forum is working on developing application programming interfaces (APIs) for including security policies in the kernel of real-time operating systems.

17.7.8 Security Policies and Procedures

Existing IT security policies and procedures have not addressed the unique aspects of substation automation and similar control systems. Security policies such as ISO-17799 [20] need to be modified in recognition of the unique characteristics of substation control and diagnostic systems.

© 2003 by CRC Press LLC

References

1. Gellman, B., Cyber Attacks by Al Qaeda Feared, *Washington Post*, June 27, 2002.
2. Riptech, Internet Security Threat Report — Attack Trends for Q1 and Q2 2002, Riptech, July 2002.
3. Weiss, J., Information Security Primer, EPRI Report TR-100797, Electric Power Research Institute, Palo Alto, CA, Sep. 2001.
4. North American Electric Reliability Council (NERC), Process Controls System Security: Remote Access, NERC Guideline, Version 0.1, NERC, Washington, DC, Nov. 2002.
5. American Gas Association (AGA), Field Communications Security Policy for the Gas Utility Operations Networks (SCADA), Version 0.5a, Washington, D.C., Apr. 2002.
6. Department of Energy, 21 Steps To Improve Cyber Security of SCADA Networks, USDOE, Washington, DC, Sep. 2002.
7. The President's Critical Infrastructure Protection Board, The National Strategy to Secure Cyberspace, Sep. 2002.
8. Report for Congress, Critical Infrastructure Remote Control Systems and the Terrorist Threat, Order Code RL31534, Aug. 2002.
9. Fitzpatrick, G. and Weiss, J., Control systems: the weak link in infrastructure protection, *Platt's Energy Bus. Technol.*, Sep. 2002.
10. Weiss, J., Testimony to the U.S. House Subcommittee on Government Efficiency, Financial Management and Intergovernmental Relations, Control System Cyber Security — Maintaining the Reliability of the Critical Infrastructure, July 2002.
11. DNP Users Group, A DNP Protocol Primer, available on-line at http://www.dnp.org/files/dnp3_primer.pdf.
12. Institute of Electrical and Electronics Engineers, IEEE Standard Definition, Specification and Analysis of Systems Used for Supervisory Control, Data Acquisition, and Automatic Control, IEEE Std. C37.1-1994, IEEE, Piscataway, NJ, 1994.
13. Institute of Electrical and Electronics Engineers, IEEE Standard Dictionary of Electrical and Electronics Terms, ANSI/IEEE Std. 100-1984, 3rd ed., IEEE, Piscataway, NJ, 1984, p. 605.
14. Institute of Electrical and Electronics Engineers, IEEE Standard Dictionary of Electrical and Electronics Terms, ANSI/IEEE Std. 100-1984, 3rd ed., IEEE, Piscataway, NJ, 1984, p. 769.
15. Institute of Electrical and Electronics Engineers, IEEE Standard Dictionary of Electrical and Electronics Terms, ANSI/IEEE Std. 100-1984, 3rd ed., IEEE, Piscataway, NJ, 1984, p. 811.
16. Computer Security Institute, Seventh Annual Computer Crime and Security Survey, Computer Security Institute, San Francisco, Apr. 2002.
17. SANS Institute, The Twenty Most Critical Internet Security Vulnerabilities, available on-line at http://www.sans.org/top20.htm.
18. National Institute of Standards and Technology, Security Requirements for Cryptographic Modules, Federal Information Processing Standards, Publication FIPS 140-2 Annex A, NIST, Gaithersburg, MD, May 25, 2001.
19. Allen, J. H., *CERT Guide to System and Network Security Practices*, Addison-Wesley, Reading, MA, 2001; available on-line at http://www.cert.org/security-improvement/.
20. International Standards Organization, International Security Standard, ISO-17799, ISO, Geneva.
21. Green, G., Hacker Jailed for Sewage Sabotage, *Courier-Mail* (Brisbane, Australia), Nov. 1, 2001.
22. Electric Power Research Institute, Information Security Guidelines for Transmission and Distribution Systems, draft unpublished report to J. Weiss, Stan Klein Associates, EPRI, Palo Alto, CA, Oct. 2000.
23. National Transportation and Safety Board, Pipeline Rupture and Subsequent Fire in Bellingham, Washington, June 10, 1999, Report PAR-02/02 NTIS PB2002-916502, NTSB, Washington, DC.
24. Byers, E., Protect That Network: Designing Secure Networks for Industrial Control, paper presented at IEEE Pulp and Paper Technical Conference, Seattle, WA, June 1999.
25. Byres, E., demonstration of SCADA and process control systems, presented at KEMA Consulting Conference on Cyber Security, Vancouver, BC, 2002.

© 2003 by CRC Press LLC

18

Gas-Insulated Transmission Line (GIL)

18.1 Introduction 18-1
18.2 History 18-2
18.3 System Design 18-3
Technical Data • Standard Units • Laying Methods
18.4 Development and Prototypes 18-9
Gas Mixture • Type Tests • Long-Duration Tests
18.5 Advantages of GIL 18-21
Safety and Gas Handling • Magnetic Fields
18.6 Application of Second-Generation GIL 18-25
18.7 Quality Control and Diagnostic Tools 18-27
18.8 Corrosion Protection 18-28
Passive Corrosion Protection • Active Corrosion Protection
18.9 Voltage Stress Coming from the Electric Power Net 18-30
Overvoltage Stresses • Maximum Stresses by Lightning Strokes • Modes of Operation • Application of External and Integrated Surge Arresters • Results of Calculations • Insulation Coordination
18.10 Future Needs of High-Power Interconnections 18-32
Metropolitan Areas • Use of Traffic Tunnels
References 18-35

Hermann Koch
Siemens

18.1 Introduction

The gas-insulated transmission line (GIL) is a system for the transmission of electricity at high power ratings over long distances. In cases where overhead lines are not possible, the GIL is a viable technical solution to bring the power transmitted by an overhead line underground without a reduction of power transmission capacity.

As a gas-insulated system, the GIL has the advantage of electrical behavior similar to that of an overhead line, which is important to the operation of the complete network. Because of the large cross section of the conductor, the GIL has low electrical losses compared with other transmission systems (overhead lines and cables). This reduces the operating and transmission costs, and it contributes to reduction of global warming because less power needs to be generated.

Safety of personnel in the vicinity of a GIL is very high because the solid metallic enclosure provides reliable protection. Even in the rare case of an internal failure, the metallic enclosure is strong enough to withstand damage. This allows the use of GILs in street and railway tunnels and under bridges with public traffic. No flammable materials are used to build a GIL. The use of GILs in traffic tunnels makes the tunnels more economical and can solve some environmental problems. If GIL is added to a traffic tunnel, the cost

0-8493-1703-7/03/$0.00+$1.50

© 2003 by CRC Press LLC

© 2003 by CRC Press LLC

FIGURE 18.1 GIL (420 kV, 2500 A) in Schluchsee, Germany. (Courtesy of Siemens.)

can be shared between the electric power supply company and the owner of the traffic part (train, vehicles). The environmental advantage is that no additional overhead line needs to be built parallel to the tunnel. Because of the low capacitive load of the GIL, long lengths of 100 km and more can be built.

Where overhead lines are not suitable due to environmental factors or where they would spoil a particular landscape, the GIL is a viable alternative because it is invisible and does not disturb the landscape. The GIL consists of three single-phase encapsulated aluminum tubes that can be directly buried in the ground or laid in a tunnel. The outer aluminum enclosure is at ground potential. The interior, the annular space between the conductor pipe and the enclosure, is filled with a mixture of gas, mainly nitrogen (80%) with some SF_6 (20%) to provide electrical insulation. A reverse current, more than 99% of the conductor current value, is induced in the enclosure. Because of this reverse current, the outer magnetic field is very low.

GIL combines reliability with high transmission capacity, low losses, and low emission of magnetic fields. Because it is laid in the ground, GIL also satisfies the requirements for power transmission lines without any visual impact on the environment or the landscape. Of course, the system can also be used to supply power to meet the high energy demands of conurbations and their surroundings. The directly buried GIL combines the advantage of underground laying with a transmission capacity equivalent to that of an overhead power line [1–3].

18.2 History

The gas-insulated transmission line (GIL) was invented in 1974 to connect the electrical generator of a hydro pump storage plant in Schluchsee, Germany. Figure 18.1 shows the tunnel in the mountain with the 400-kV overhead line. The GIL went into service in 1975 and has remained in service without interruption since then, delivering peak energy into the southwestern 420-kV network in Germany. With 700 m of system length running through a tunnel in the mountain, this GIL is still the longest application at this voltage level in the world. Today, at high-voltage levels ranging from 135 to 550 kV, a total of more than 100 km of GILs have been installed worldwide in a variety of applications, e.g., inside high-voltage substations or power plants or in areas with severe environmental conditions.

Typical applications of GIL today include links within power plants to connect high-voltage transformers with high-voltage switchgear, links within cavern power plants to connect high-voltage transformers in the cavern with overhead lines on the outside, links to connect gas-insulated substations (GIS) with overhead lines, and service as a bus duct within gas-insulated substations. The applications are carried out under a wide range of climate conditions, from low-temperature applications in Canada, to the high ambient temperatures of Saudi Arabia or Singapore, to the severe conditions in Europe or in South Africa. The GIL transmission system is independent of environmental conditions because the high-voltage system is completely sealed inside a metallic enclosure.

The GIL technology has proved its technical reliability in more than 2500 km·years of operation without a major failure. This high system reliability is due to the simplicity of the transmission system, where only aluminum pipes for conductor and enclosure are used, and the insulating medium is a gas that resists aging.

© 2003 by CRC Press LLC

TABLE 18.1 Technical Data for 420-kV and 550-kV GIL Transmission Networks

Type	Value
Nominal voltage (kV)	420/550
Nominal current (A)	3150/4000
Lightning impulse voltage (kV)	1425/1600
Switching impulse voltage (kV)	1050/1200
Power frequency voltage (kV)	630/750
Rated short-time current (kA/3 s)	63
Rated gas pressure (bar)	7
Insulating gas mixture	80% N_2, 20% SF_6

Source: Courtesy of Siemens.

The high cost of GILs has restricted their use to special applications. However, with the second-generation GIL, a total cost reduction of 50% has made the GIL economical enough for application over long distances. The breakthrough in cost reduction is achieved by using highly standardized GIL units combined with the efficiencies of automated orbital-welding machines and modern pipeline laying methods. This considerably reduces the time required to lay the GIL, and angle units can be avoided by using the elastic bending of the aluminum pipes to follow the contours of the landscape or the tunnel. This breakthrough in cost and the use of N_2/SF_6 gas mixtures have made possible what is now called second-generation GIL, and it is a very interesting transmission system for high-power transmission over long distances, especially if high power ratings are needed.

The second-generation GIL was first built for eos (energie ouest suisse) at the PALEXPO exhibition area, close to the Geneva Airport in Switzerland. Since January 2001, this GIL has been in operation as part of the overhead line connecting France with Switzerland. The success of this project has demonstrated that the new laying techniques are suitable for building very long GIL transmission links of 100 kilometers or more within an acceptable time schedule.

18.3 System Design

18.3.1 Technical Data

The main technical data of the GIL for 420-kV and 550-kV transmission networks are shown in Table 18.1. For 550-kV applications, the SF_6 content or the diameter of the enclosure pipe might be increased.

The rated values shown in Table 18.1 are chosen to match the requirements of the high-voltage transmission grid of overhead lines. The power transmission capacity of the GIL is 2000 MVA whether tunnel laid or directly buried. This allows the GIL to continue with the maximum power of 2000 MVA of an overhead line and bring it underground without any reduction in power transmission [4, 5]. The values are in accordance with the relevant IEC standard for GILs, IEC 61640 [6].

18.3.2 Standard Units

Figure 18.2 shows a straight unit combined with an angle unit. The straight unit consists of a single-phase enclosure made of aluminum alloy. In the enclosure (1), the inner conductor (2) is fixed by a conical insulator (4) and lays on support insulators (5). The thermal expansion of the conductor toward the enclosure is adjusted by the sliding contact system (3a, 3b). One straight unit has a length up to 120 m made by single pipe sections welded together by orbital-welding machines. If a directional change exceeds what the elastic bending allows, then an angle element (shown in Figure 18.2) is added by orbital welding with the straight unit. The angle element covers angles from 4 to 90°. Under normal conditions of the landscape, no angle units are needed because the elastic bending, with a bending radius of 400 m, is sufficient to follow the contour.

At distances of 1200 to 1500 m, disconnecting units are placed in underground shafts. Disconnecting units are used to separate gas compartments and to connect high-voltage testing equipment for the

© 2003 by CRC Press LLC

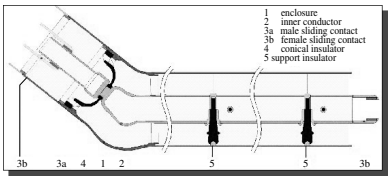

FIGURE 18.2 Straight construction unit with an angle element. (Courtesy of Siemens.)

commissioning of the GIL. The compensator unit is used to accommodate the thermal expansion of the enclosure in sections that are not buried in the earth. A compensator is a type of metallic enclosure, a mechanical soft section, which allows movement related to the thermal expansion of the enclosure. It compensates the length of thermal expansion of the enclosure section. Thus compensators are used in tunnel-laid GILs as well as in the shafts of directly buried GILs.

The enclosure of the directly buried GIL is coated in the factory with a multilayer polymer sheath as a passive protection against corrosion. After completion of the orbital weld, a final covering for corrosion protection is applied on site to the joint area.

Because the GIL is an electrically closed system, no lightning impulse voltage can strike the GIL directly. Therefore, it is possible to reduce the lightning impulse voltage level by using surge arresters at the end of the GIL. The integrated surge-arrester concept allows reduction of high-frequency overvoltages by connecting the surge arresters to the GIL in the gas compartment [7].

For monitoring and control of the GIL, secondary equipment is installed to measure gas pressure and temperature. These are the same elements that are used in gas-insulated switchgear (GIS). For commissioning, partial-discharge measurements are obtained using the sensitive very high frequency (VHF) measuring method.

An electrical measurement system to detect arc location is implemented at the ends of the GIL. Electrical signals are measured and, in the very unlikely case of an internal fault, the position can be calculated by the arc location system (ALS) with an accuracy of 25 m.

The third component is the compensator, installed at the enclosure. In the tunnel-laid version or in an underground shaft, the enclosure of the GIL is not fixed, so it will expand in response to thermal heat-up during operation. The thermal expansion of the enclosure is compensated by the compensation unit. If the GIL is directly buried in the soil, the compensation unit is not needed because of the weight of the soil and the friction of the surface of the GIL enclosure.

The fourth and last basic module used is the disconnecting unit, which is used every 1.2 to 1.5 km to separate the GIL in gas compartments. The disconnecting unit is also used to carry out sectional high-voltage commissioning testing.

An assembly of all these elements as a typical setup is shown in Figure 18.3, which illustrates a section of a GIL between two shafts (1). The underground shafts house the disconnecting and compensator units (2). The distance between the shafts is between 1200 and 1500 m and represents one single gas compartment. A directly buried angle unit (3) is shown as an example in the middle of the figure. Each angle unit also has a fix point, where the conductor is fixed toward the enclosure.

18.3.3 Laying Methods

The GIL can be laid aboveground on structures, in a tunnel, or directly buried into the soil like an oil or gas pipeline. The overall costs for the directly buried version of the GIL is, in most cases, the least expensive version of GIL laying. For this laying method, sufficient space is required to provide accessibility for working on site. Consequently, directly buried laying will generally be used in open landscape crossing the countryside, similar to overhead lines, but invisible.

18.3.3.1 Directly Buried

The most economical and fastest method of laying cross country is the directly buried GIL. Similar to pipeline laying, the GIL is continuously laid within an open trench. A nearby preassembly site reduces

© 2003 by CRC Press LLC

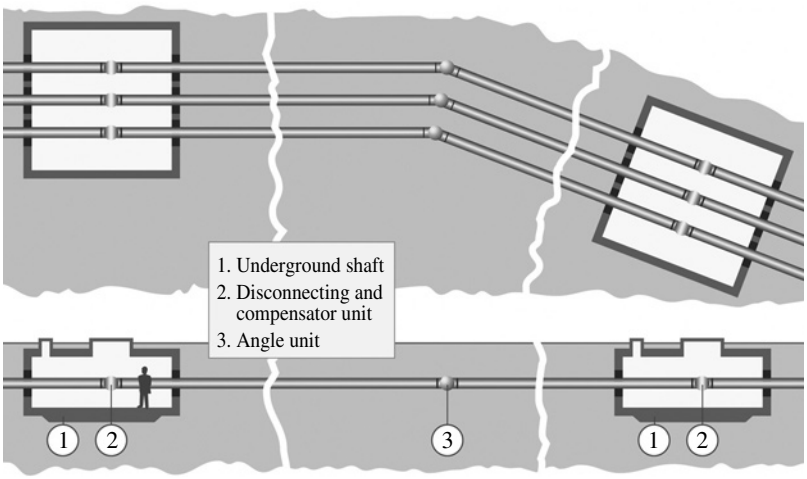

FIGURE 18.3 Directly buried GIL system components. (Courtesy of Siemens.)

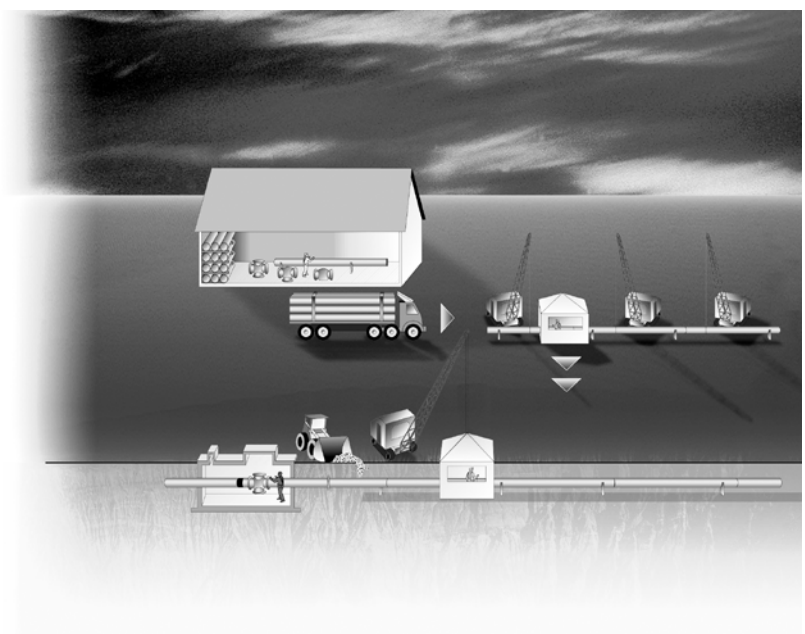

FIGURE 18.4 Laying procedure for a directly buried GIL. (Courtesy of Siemens.)

the cost of transporting GIL units to the site. With the elastic bending of the metallic enclosure, the GIL can flexibly adapt to the contours of the landscape. In the soil, the GIL is continuously anchored, so that no additional compensation elements are needed [8, 9].

The laying procedure for a directly buried GIL is shown in Figure 18.4. The left side of the figure shows a digging machine opening the trench, which will have a depth of about 1.2 to 2 m. The building shown close to the trench is the prefabrication area, where GIL units of up to 120 m in length are preassembled and prepared for laying. The GIL units are transported by cranes close to the trench and then laid into the trench. The connection to the already laid section is done within a clean housing tent in the trench. The clean housing tent is then moved to the next joint and the trench is backfilled. Figure 18.5 shows the moment of laying the GIL into the trench. Figure 18.6 shows the bended tube and backfilling of the trench.

© 2003 by CRC Press LLC

FIGURE 18.5 Laying the GIL into the soil. (Courtesy of Siemens.)

18.3.3.2 Aboveground Installation

Aboveground GIL installations are usually installed on steel structures in heights of 1 to 5 m aboveground. The enclosures are supported in distances of 20 to 40 m. This is because of the rigid metal enclosure. Because of the mechanical layout of the GIL, it is also suitable to use existing bridges to cross, e.g., a river.

The aboveground installations are typical for installations within substations to connect, e.g., the bay of a GIS with an overhead line, where larger distances between the phases of the three-phase system are used, or to connect the GIS directly with the step-down transformer. The GIL is often chosen if very high reliability is needed, e.g., in nuclear power stations.

Another reason for GIL applications in substation power is that the aboveground installations are used for the transmission of very high electrical power ratings. The strongest GIL has been installed in Canada

© 2003 by CRC Press LLC

FIGURE 18.6 Bended tube and backfilling. (Courtesy of Siemens.)

at the Kensington Nuclear Power Station in a substation with GIS where single sections of the GIL bus bar system can carry currents of 8000 A and can withstand short circuit currents of 100,000 A.

Aboveground GIL installations inside substations are widely used in conjunction with GIS. Usually, the substations are fenced and, therefore, not accessible to the public. If this is not the case, laid tunnel or directly buried GIL will be chosen for safety reasons. Accessibility of GIL to the public is generally avoided so as not to allow manipulations on the GIL (e.g., drilling a hole into the enclosure), which can be dangerous because of the high voltage potential inside.

18.3.3.3 Tunnel-Laid

If there is not enough space available to bury a GIL, laying the GIL into a tunnel will be the most appropriate method. This tunnel-laying method is used in cities or metropolitan areas as well as when crossing a river or interconnecting islands. Because of the high degree of safety that GIL offers, it is possible to run a GIL through existing or newly built street or railway tunnels, for example in the mountains.

Modern tunneling techniques have been developed during the past few years with improvements in drilling speed and accuracy. So-called microtunnels, with a diameter of about 3 m, are economical solutions in cases when directly buried GIL is not possible, e.g., in urban areas, in mountain crossings, or in connecting islands under the sea. Such microtunnels are usually the shortest connection between two points and, therefore, reduce the cost of transmission systems. After commissioning, the system is easily accessible. Figure 18.7 shows a view into a GIL tunnel at the IPH test field in Berlin. This tunnel of 3 m in diameter can accommodate two systems of GIL for rated voltages of up to 420/550 kV and with rated currents of 3150 A. This translates to a power transmission capacity of 2250 MVA for each system.

Figure 18.8 shows a view into the tunnel at PALEXPO at Geneva Airport in Switzerland with two GIL systems. The tunnel dimensions in this case are 2.4 m wide and 2.6 m high. The transmission capacity of this GIL is also 2250 MVA at 420/550-kV rated voltage with rated currents up to 3150 A.

In both laying methods — directly buried and tunnel laid — the elastic bending of the GIL can be seen in Figure 18.6 and Figure 18.8, respectively. The minimum acceptable bending radius is 400 m.

Figure 18.9 shows the principle for the laying procedure in a tunnel. GIL units of 11 to 14 m in length are brought into a tunnel by access shafts and then connected to the GIL transmission line in the tunnel. In cases with horizontal accessibility — such as in a traffic tunnel for trains or vehicles — the GIL units can be much longer, 20 to 30 m by train transportation. This increase in length reduces the assembly work and time and allows major cost reductions. A special working place for mounting and welding is installed at the assembly site [10]. As seen in Figure 18.9, the delivery and supply of prefabricated elements (1) is brought to the shaft or tunnel entrance. After the GIL elements are brought into the shaft to the mounting and welding area (2), the elements are joined by an orbital-welding machine. The GIL section is then brought into the tunnel (3). When a section is ready, a high-voltage test is carried out (4) to validate each section.

© 2003 by CRC Press LLC

FIGURE 18.7 View into the tunnel. (Courtesy of Siemens.)

FIGURE 18.8 Tunnel-laid GIL for voltages up to 550 kV. (Courtesy of Siemens.)

© 2003 by CRC Press LLC

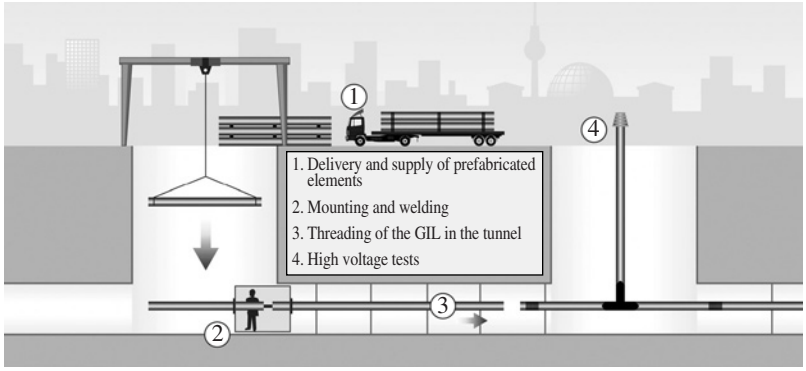

FIGURE 18.9 Laying and testing in a tunnel. (Courtesy of Siemens.)

TABLE 18.2 Technical Data for Tunnel-Laid and Directly Buried GIL Transmission Networks

	Tunnel-Laid GIL		Directly Buried GIL	
Nominal voltage (kV)	420/550	kV	420/550	kV
Nominal current (A)	3150	A	3150	A
Lightning impulse voltage (kV)	1425	kV	1425	kV
Switching impulse voltage (kV)	1050	kV	1050	kV
Rated short-time current (kA/3 s)	63	kA/3 s	63	kA/3 s
Rated transmission capacity (MVA)	2250	MVA	2250	MVA
Insulating gas mixture	80% N_2	N_2	80% N_2	N_2
	20% SF_6	SF_6	20% SF_6	SF_6
Pipe outside dimension (mm)	520	mm	600	mm

Source: Courtesy of Siemens.

18.4 Development and Prototypes

Development of the second-generation GIL was based on the knowledge of gas-insulated technologies and was carried out in type tests and long-duration tests. The type tests proved the design in accordance with IEC 60694, IEC 60517, IEC 61640, and related standards [11, 12]. An expected lifetime of 50 years has been simulated in long-term duration tests involving combined stresses of current and high-voltage cycles that were higher than the nominal ratings. At the IPH test laboratory in Berlin, Germany, tests have been carried out on tunnel-laid and directly buried GIL in cooperation with the leading German utilities.

A prototype tunnel-laid GIL of approximately 70-m length has been installed in a concrete tunnel. The jointing technique of a computer-controlled orbital-welding machine was applied under realistic on-site conditions. The prototype assembly procedure has also been successfully proved under realistic on-site conditions.

The directly buried gas-insulated transmission line is a further variant of GIL. After successful type tests, the properties of a 100-m-long directly buried GIL were examined in a long-duration test with typical accelerated load cycles. The results verified a service life of 50 years. Installation, construction, laying, and commissioning were all carried out under real on-site conditions. The test program represents the first successfully completed long-duration test for GIL using the insulating N_2/SF_6 gas mixture.

The technical data for the directly buried and tunnel-laid GIL are summarized in Table 18.2.

The values shown in Table 18.2 are chosen for the application of GIL in a transmission grid with overhead lines and cables. Because the GIL is an electrically closed system, meaning the outer enclosure

© 2003 by CRC Press LLC

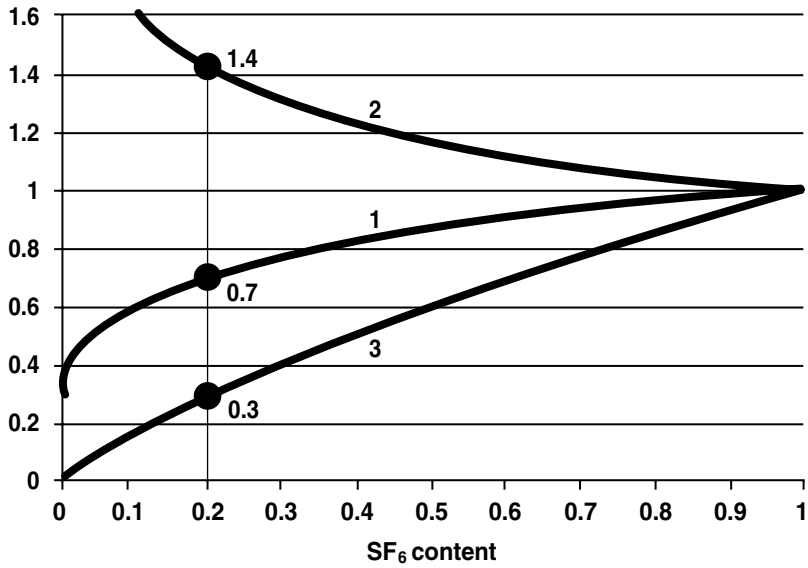

FIGURE 18.10 Normalized ideal intrinsic properties of N_2/SF_6 mixtures. 1. Pressure-reduced critical field; 2. necessary pressure for mixtures of equal critical field strength; 3. necessary amount of SF_6 for mixtures of equal critical field strength. (Courtesy of Siemens.)

is completely metallic and grounded, no lightning impulse voltage can directly strike the GIL. Therefore, it is possible to reduce the lightning impulse voltage level by using surge arresters at the ends of the GIL. The integrated surge-arrester concept allows the reduction of high-frequency overvoltages by connecting the surge arresters to the GIL in the gas compartment [7].

18.4.1 Gas Mixture

Like natural air, the gas mixture consists mainly of nitrogen (N_2), which is chemically even more inert than SF_6. It is therefore an ideal and inexpensive admixture gas that calls for almost no additional handling work on the gas system [13]. The low percentage (20%) of SF_6 in the N_2/SF_6 gas mixture acquires high dielectric strength due to the physical properties of these two components. Figure 18.10 shows that a gas mixture with an SF_6 content of only 20% has 70% of the pressure-reduced critical field strength of pure SF_6. The curves are defined in Figure 18.10.

A moderate pressure increase of 40% is necessary to achieve the same critical field strength of pure SF_6.

N_2/SF_6 gas mixtures are an alternative to pure SF_6 if only dielectric insulation is needed and there is no need for arc-quenching capability, as in circuit breakers or disconnectors. Much published research work has been performed and properties ascertained in small test setups under ideal conditions [14]. The arc-quenching capability of N_2/SF_6 mixtures is inferior to pure SF_6 in approximate proportion to its SF_6 content [15]. N_2/SF_6 mixtures with a higher SF_6 concentration are successfully applied in outdoor SF_6 circuit breakers in arctic regions in order to avoid SF_6 liquefaction, but a reduced breaking capability has to be accepted.

In the event of an internal arc, the N_2/SF_6 gas mixture with a high percentage of N_2 (80%) behaves similar to air. The arc burns with a large footpoint area. Footpoint area is the area covered by the footpoint of an internal arc during the arc burning time of typically 500 ms. Consequently, the thermal-power-flow density into the enclosure at the arc footpoint is much less, which causes minimal material erosion of the enclosure. The result is that the arc will not burn through, and there is no external impact to the surroundings or the environment.

© 2003 by CRC Press LLC

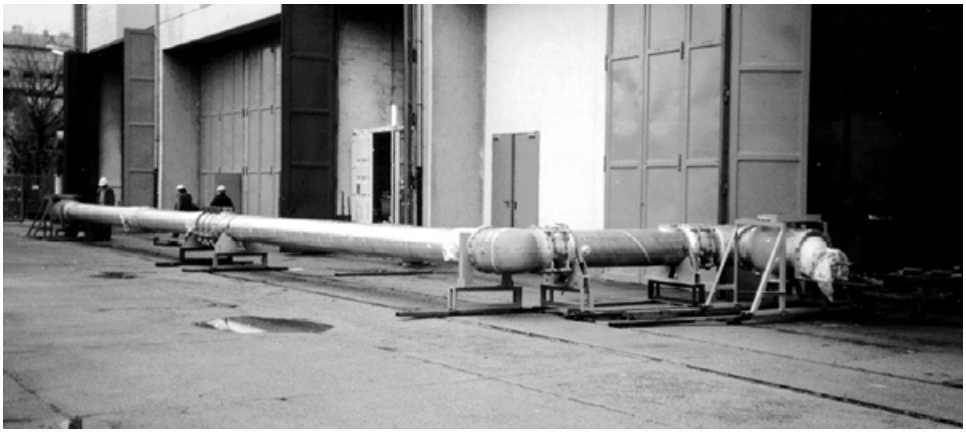

FIGURE 18.11 High-current and internal-arc test setup. (Courtesy of Siemens.)

TABLE 18.3 Parameters for Short-Circuit Withstand Test

GIL Test Parameter	Tunnel-Laid GIL	Directly buried GIL
Short-circuit peak current (kA)	185	165
Short-time current (kA)	75	63
Duration of short-circuit current (s)	0.5	3

18.4.2 Type Tests

The type tests were based on the new IEC 61640 standard [6]. The test parameters for additional tests to assess GIL lifetime performance were defined with reference to the CIGRE recommendation for prequalification tests (WG 21-03, September 1992) and IEC 61640.

For the type tests, full-scale test setups were installed, containing all essential design components.

18.4.2.1 Short-Circuit Withstand Tests

The short-circuit withstand tests were carried out on the test setup shown in Figure 18.11. The GIS test setup was assembled using the different GIS units: straight unit, angle unit, compensator unit, and disconnector unit. From left to right in Figure 18.11 there is: the straight unit; next a 90° angle unit; and at the far right a disconnection unit. Table 18.3 lists the parameters for the short-circuit withstand test. The different values for the duration of short-circuit currents are not related to design criteria but, rather, reflect regional market requirements.

After these tests, no visible damage was seen, and the functionality of the GIL prototype was not impaired. The contact resistivity was measured after the test and was well within the range of what was allowed by the IEC 61640 standard. Actually, the contact resistivity of the GIL sliding contact after the test was even a little lower than before, indicating the system's very good current-carrying capability.

18.4.2.2 Internal-Arc Test

To check whether arcing due to internal faults causes burn-through of the enclosure, an internal-arcing test was performed on the GIL prototype. Tests were carried out with arc currents of 50 and 63 kA and arc duration times of 0.33 and 0.5 s. The results of the internal-arcing tests showed only little damage, with the wall thickness of the enclosure eroding by only a few micrometers. The pressure rise was very low because of the size of the compartment of about 20 m in length. Figure 18.12, a view into the GIL after the arc fault test, shows very few distortions. The resistance to arcing damage means that the GIL can use the autoreclosure function, the same as with overhead lines.

© 2003 by CRC Press LLC

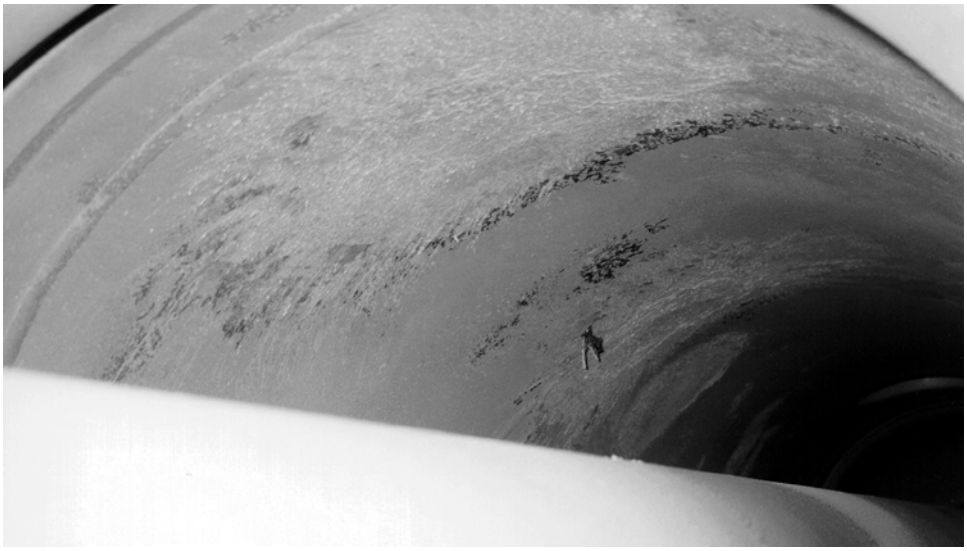

FIGURE 18.12 View into the GIL after an arc fault of 63 kA and 0.5 s. (Courtesy of Siemens.)

Results of the internal-arc tests can be summarized as follows:

- No external influence during and after the internal-arc test was noticed.
- No burn-through of the enclosure occurred. Very low material erosion was observed on the enclosure and conductor.
- The pressure rise within the enclosures during arcing was so low that even the rupture discs did not open.
- The arc characteristic is much smoother compared with the characteristics in pure SF_6 (e.g., large arc diameter and lower arc traveling speed).
- Cast-resin insulators were not seriously affected.

All of these results speak in favor of the safe operation of the GIL. Even in the very unlikely event of an internal arc, the external environment is not affected. The results of the arc fault test also showed that in the case of a tunnel-laid GIL, there is no danger to the people traveling through the tunnel. This makes the GIL the only high-power transmission system that can be used in public traffic tunnels together with trains and street traffic.

18.4.2.3 Dielectric Tests

Dielectric type tests were carried out on the full-scale test setup in the high-voltage laboratory of Siemens in Berlin (Figure 18.13) and in the IPH test laboratory, also in Berlin. The tunnel-laid and directly buried GIL systems were tested according to the rated voltages and test voltages given in IEC Std. 61640. The gas pressure was set to 7 bar abs. Test parameters are presented in Table 18.4.

The tests were applied with 15 positive and 15 negative impulses, and the power-frequency withstand-test voltage was applied for 1 min. All tests were passed.

18.4.3 Long-Duration Tests

To check the GIL system's suitability for practical use, every effort was made to implement a test setup that came close to real conditions. Therefore, the tunnel-laid GIL was assembled on site and installed in a tunnel made of concrete tubes (total length: 70 m). The directly buried GIL was laid in soil (total length: 100 m). The test parameters are given in Table 18.5.

© 2003 by CRC Press LLC

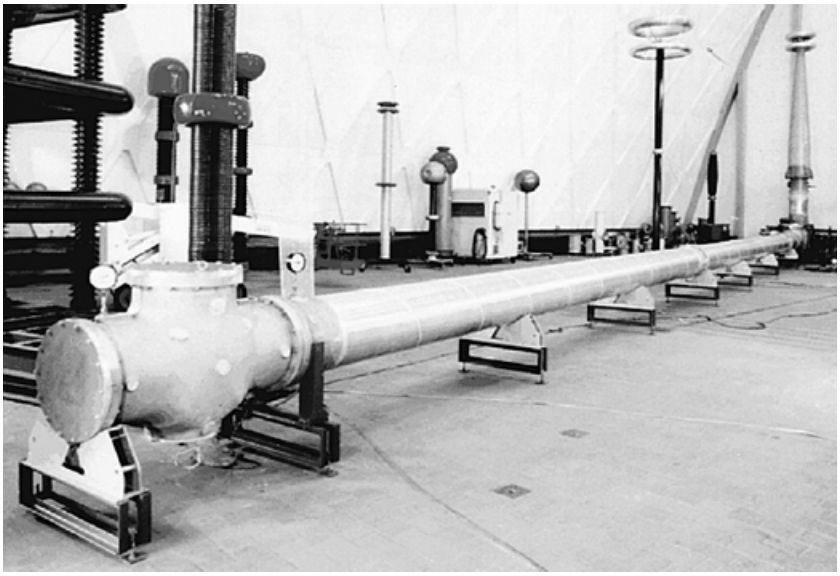

FIGURE 18.13 Test setup for high-voltage tests. (Courtesy of Siemens.)

TABLE 18.4 Parameters for Dielectric Type Tests at 7-bar Gas Pressure

GIL Test Parameters	Directly Buried and Tunnel-Laid GIL	Directly Buried GIL
Rated voltage, U_r	420 kV	550 kV
ac withstand test, 1 min	630 kV	750 kV
Lightning impulse test	1425 kV	1600 kV
Switching impulse test	1050 kV	1200 kV

Source: Courtesy of Siemens.

TABLE 18.5 Parameters of the Commissioning Test and the Recommissioning Test after Demonstration of a Repair Process

	GIL Test Parameters, Directly Buried		GIL Test Parameters, Tunnel Laid	
Commissioning	ac withstand test, 1 min with PD monitoring	630 kV	ac withstand test, 10 s	550 kV
			ac withstand test, 1 min with PD monitoring	504 kV
	Lightning impulse test	1300 kV	Lightning impulse test	1140 kV
	Switching impulse test	1050 kV		
Recommissioning, after demonstration of repair process	ac withstand test, 1 min with PD monitoring	630 kV	ac withstand test, 10 s	550 kV
			ac withstand test, 1 min with PD monitoring	504 kV
	Lightning impulse test	1300 kV	lightning impulse test	1140 kV
	Switching impulse test	1050 kV		
	ac, 48 h, with PD monitoring	480 kV		
Final test (tunnel laid, after 2500 h) (directly buried, after 2880 h)	ac withstand test, 1 min with PD monitoring	630 kV	ac withstand test, 10 s	550 kV
			ac withstand test, 1 min with PD monitoring	504 kV
	Lightning impulse test	1300 kV	lightning impulse test	1140 kV
	Switching impulse test	1050 kV		
	ac, 48 h, with PD monitoring	480 kV		

Source: Courtesy of Siemens.

© 2003 by CRC Press LLC

TABLE 18.6 Load Cycles and Intermediate Tests of the Long-Duration Test

GIL Test Parameters, Tunnel Laid			GIL Test Parameters, Directly Buried		
Load cycles	Total duration	2500 h	Load cycles, time parameters change every 480 h	Total duration	2880 h
	Duration of one cycle	12 h		Duration of one cycle	12/24 h
	Number of cycles	210		Number of cycles	120/50
	Heating current, 7 h	3200 A		Heating current, 8 h	4000 A
	High voltage, 5 h	480 kV		High voltage, 4 or 16 h	480 kV
Intermediate tests, every 480 h	Switching impulse test	1050 kV	Intermediate tests, every 480 h	Lightning impulse test	1140 kV

Source: Courtesy of Siemens.

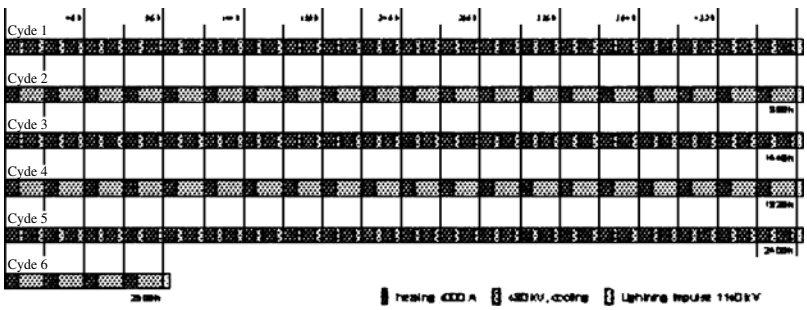

FIGURE 18.14 Long-duration test cycle of the directly buried GIL. For the tunnel-laid GIL, the test sequences of cycle type 1 had been applied for the total duration. (Courtesy of Siemens.)

The test values are derived from typical applications for directly buried and tunnel-laid GIL. The lower test voltages for the tunnel-laid GIL reflect the fact that such systems are typically used in metropolitan areas, where they are usually connected to cable systems and therefore have lower overvoltages from the net. The higher voltages for the directly buried GIL represent the typical application as part of the overhead line net, with higher overvoltages due to lightning. In any case, both applications of test voltages can be used for directly buried and tunnel-laid GIL.

The duration and cycle times of the current and high-voltage sequences were chosen to apply maximum stress to heat up and cool down the GIL system. After a heat cycle of 12 or 24 h, the current was switched off, and the high voltage was applied to the GIL at the moment when the strongest mechanical forces were coming with the cool-down phase of the GIL. The sequences are listed in Table 18.6.

The total time of the long-duration test was 2500 h, which represents a lifetime of 50 years due to the overvoltage (double value) and the mechanical stress. The complete long-duration test is shown in Figure 18.14.

GIL conductor and enclosure temperature, as well as GIL movement due to thermal expansion/contraction, were monitored during load cycles. All tests were performed successfully.

18.4.3.1 Long-Duration Test on a Tunnel-Laid GIL

A 70-m-long prototype was assembled and laid in a concrete tunnel of 3-m diameter (Figure 18.15). The arrangement contained all major components of a typical GIL, including supports for the tunnel installation. The tunnel segments are original concrete units that are laid 20 to 40 m under the street level. The technology of drilling such tunnels has improved during the past few years, and a large reduction in costs can be obtained through today's improved measuring and control techniques.

Figure 18.16 shows a top view of the long-duration test setup, which consists of a 50-m straight-construction unit, an angle unit, and another 20-m section after the directional change. The axial compensator took care of the thermal expansion of the enclosure during the load cycles. The disconnecting unit separates the GIL toward the high-voltage connection and the connection to the high-current

© 2003 by CRC Press LLC

FIGURE 18.15 Tunnel arrangement of two systems GIL for the long-term test. (Courtesy of Siemens.)

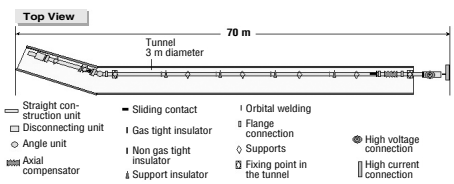

FIGURE 18.16 Arrangement of long-duration test setup. (Courtesy of Siemens.)

source. Sliding contacts inside the GIL compensate for the thermal expansion of the conductor, which slides on support insulators.

The segments of the GIL are welded with an orbital-welding machine, as seen in Figure 18.17. The orbital-welding machine is highly automated and gives a high-quality, reproducible weld. Together with the orbital welding, an automated, ultrasonic measuring system provides 100% quality control of the weld, which guarantees a gas-tight enclosure with a gas leakage rate of almost zero.

In addition to the above-mentioned long-duration test with extremely high mechanical and electrical stresses, the sequence was interrupted after 960 h and a planned repair process — including the substitution of a tube length — was carried out (Figure 18.18). The total process of exchanging a segment of the GIL, including the recommissioning high-voltage testing, was finished in less than 1 week. The results demonstrate that the GIL can be repaired on site and then returned to service without any problems. The repair process requires only simple tools and is easily carried out in a short time.

Mixing of the gas was performed on site using a newly developed computer-controlled gas mixing device. The mixing process is continuous and arrives at a very high accuracy of the chosen gas mixture in the GIL. The gas mixture can be stored in standard high-pressure gas compartments (up to 200 bar) and can be reused after recommissioning.

© 2003 by CRC Press LLC

FIGURE 18.17 Computer-controlled orbital welding on site. (Courtesy of Siemens.)

FIGURE 18.18 Cutting the enclosure pipe with a saw. (Courtesy of Siemens.)

© 2003 by CRC Press LLC

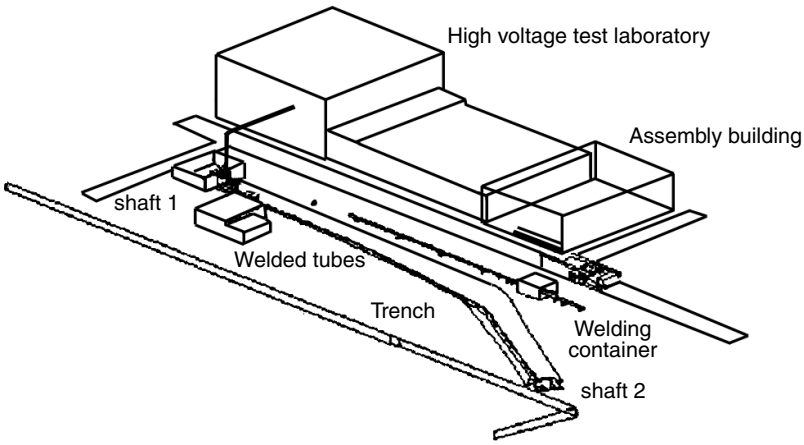

FIGURE 18.19 Site arrangements of the directly buried long-duration test. (Courtesy of Siemens.)

18.4.3.2 Long-Duration Test on a Directly Buried GIL

The long-duration test for the buried GIL was carried out on a 100-m-long test setup. Figure 18.19 shows the site arrangements. The laying procedure was carried out under realistic on-site conditions. Installation of the GIL under these conditions has proved the suitability of this laying procedure. The economy of the tools and procedures developed for this solution have been successfully demonstrated.

The tunnel-laid GIL described here is the first one with a N_2/SF_6 gas mixture to be tested and qualified in a long-duration test. The long-duration test — which involves extremely high stresses over a period of 2500 h (simulating a lifetime of more than 50 years) and a planned interruption to simulate a repair process — was concluded successfully. The results demonstrate once again the excellent performance and high reliability of the GIL [16, 17].

Figure 18.19 shows the IPH high-voltage test laboratory in Berlin with the high-voltage connection to shaft 1. From shaft 1, the trench with the directly buried GIL of 100-m length, including elastic bending and a directly buried angle module, proceeds to shaft 2 at the end. In shaft 2, a ground switch closes the current loop. The current-injection devices are in shaft 1. The shaft structures at the ends of the tunnel-laid GIL accommodate the separating modules and expansion fittings. The secondary equipment with the telecommunications system is also located there.

A crane transports the assembled GIL unit from the nearby assembly building to the welding container situated beside the trench, where the straight GIL segments are joined using an orbital-welding machine. The final on-site assembly takes place either beside the trench or in the shaft structures. The place of assembly depends on the civil engineering design dictated by local conditions. The installation finishes with the laying of the GIL in its final position. Figure 18.20 shows the trench-laying of the GIL with cranes. The trench follows a spherical curve with a bending radius of 400 m, which can be seen in Figure 18.20.

The process of constructing the trench and laying the GIL is quick and cost effective. The thermal expansion of the enclosure is absorbed by the surrounding bedding of coarse material by means of frictional forces. The bedding must also have sufficient thermal conductivity to dissipate the heat losses from the GIL. The temperature at the transition from the enclosure to the ground does not exceed 50°C when 2250 MVA are transmitted continuously by the GIL.

For the purpose of commissioning, comprehensive electrical and mechanical tests are necessary to verify the properties of the directly buried GIL. In addition to verifying the dielectric properties and checking the secondary equipment, the tests listed in Table 18.7 must be performed.

In addition, the typical elements of the secondary equipment of the GIL were employed: thus, partial discharge (PD) measurement was carried out during commissioning and on-line during the test. The gas properties, such as temperature and pressure, were monitored on a continuous basis. Arc-location

© 2003 by CRC Press LLC

FIGURE 18.20 Trench of 55-m-long section during laying and view into the trench. (Courtesy of Siemens.)

sensors were implemented. Radio sensors measured conductor temperature, gas density at the conductor, and the enclosure temperature in the ground at several points. The mechanical behavior of the GIL was studied by monitoring data from displacement sensors in the shaft structures and along the route. These sensors record the movement of the GIL relative to the ground or to the building.

During the course of the long-term test, the essential physical variables that describe the GIL — and that are used to prove the parameters of the calculations — are recorded. In addition to the electrical stress imposed on the system by voltage and current, the above-mentioned temperatures and movement were recorded.

© 2003 by CRC Press LLC

TABLE 18.7 Tests on Commissioning and Recommissioning

Pressure test	Verification per pressure-vessel regulation
Gas-tightness test	Checking of flange joints
State of gas mixture	Mixture ratio
	Filling pressure
	Dew point
Corrosion-protection-coating voltage test	10 kV/min
Resistance test	Main circuit

Source: Courtesy of Siemens.

18.4.3.3 Results of the Long-Duration Testing

18.4.3.3.1 Thermal Aspects

The GIL and its surrounding soil is a system of thermally coupled bodies, with inner heat produced by circulation of electrical current in both the conductor and the enclosure. Convection and radiation remove the heat losses from the conductor to the enclosure, while heat transfer in the annulus by conduction is negligible. This heat, adding to the losses by Joule effect from the enclosure, dissipates in the soil mainly in the radial direction to the surface of the soil and then flows into the ambient air by convection. The soil parameters were obtained from various literature sources documenting the soil properties in Berlin.

Before performing the unsteady-state study of the thermal behavior of the GIL, a steady-state model was developed taking into account the mechanisms of conduction in a solid body, natural convection in a cylindrical cavity, and radiation and convection in the interface between the soil surface and the air. The thermal system was divided into two parts — the GIL and the surrounding soil — and the physical phenomena occurring in each part was modeled. The FEM method (ANSYS program) was used first to check the accuracy of the developed analytical model and then to carry out the unsteady-state analyses of the thermal behavior of the buried GIL.

18.4.3.3.1.1 Calculation Model — Calculations were carried out using the finite element method. Heat loss, heat-transfer coefficient, and thermal resistance in the annular gap between the conductor and enclosing tube were calculated using a steady-state method according to the IEC 60287 standard [18]. These results were then used as constants in the transient calculation.

Calculations for the GIL cross section at the first location were carried out with the following parameters:

Cover h = 0.7 m (h = 2.6 m for the second location)
Thermal conductivity, λ = 1.6 W/mK
Soil temperature, T_s = 15°C
Initial values for soil temperature, T_i = 20°C

The thermal resistance of the soil was measured at the start of the test at three different places (at the ends of the line and in the center). At each of these points, measurements were taken at two depths between 0.9 and 2.3 m. The average thermal resistance measured varied from 0.46 to 0.80 mK/W, a 70% difference between the extreme measured values. The measurements show a wide scatter from the mean value. The thermal resistance that was used in the calculations was taken as the mean values of the measurements.

The boundary conditions used in the calculations were as follows:

Interface between soil and air: heat-transfer coefficient 20 W/m^{2}K
Air temperature is taken as an approximation of the measured air temperature by a sine function
Temperature of soil: 15°C (20 m away from the GIL)
Initial temperature of soil: 20°C
Bisecting line: heat loss 0 W/m^2 (symmetry conditions)

© 2003 by CRC Press LLC

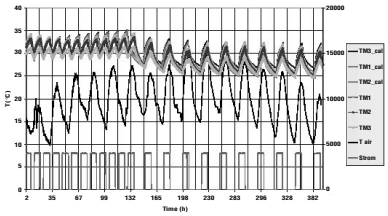

FIGURE 18.21 Comparison of numerical and experimental results of overload current rating of a directly buried GIL long-duration test, short and long cycle. (Courtesy of Siemens.)

Calculations were carried out for the following cycles load:

Short cycle
8 h, I = 4000 A, loss = 145 W/m
4 h, I = 0 A, loss = 0 W/m
Long cycle
8 h, I = 4000 A, loss = 145 W/m
16 h, I = 0 A, loss = 0 W/m

18.4.3.3.1.2 Comparison of Calculations and the Test Results — In order to compare the measured temperatures with the calculated temperatures, heating of the GIL during the whole test time was simulated. Comparisons of the measured and the calculated temperatures for a 1-m depth and 16 days (01.09.99 to 16.09.99), with two cycles occurring above, below, and to the side of the enclosing tube. The calculations agree well with the measured values. The maximum temperatures rose slowly during the short cycles and reached 35°C after 8 days. During the second period, the cooling phase was extended from 4 h to 16 h, which was why the temperatures in the GIL system fell (Figure 18.21). In this case, the maximum enclosing-tube temperatures were less than 33°C.

The calculations, unlike the measurements, show that the maximum temperature is to be found around the circumference of the underside of the enclosing tube, since the effect of heat transfer by natural convection from the inner conductor to the enclosing tube is not taken into account in the calculations. In the upper and lower parts of the enclosing tube, the different temperatures can be explained by variations in the resistance of the soil.

The diagram in Figure 18.22 shows the temperature distribution of the calculations in the soil at time 188 h (7.8 days) during the heating phase. The temperature measured during the test is assumed as a marginal condition for the air temperature. Temperature distributions during the day and the night show a difference only in the higher layer of soil immediately below the ground surface. This can be explained by the heat transmission between air and the surface of the ground due to the lower air temperature during the night. Heat transmission from the GIL is better at night, since the temperatures in the soil are slightly lower. The fluctuation in air temperature between night and day did not have as great an influence on the temperature distribution in the GIL and the soil as those that caused the load variation.

Further simulations of the test were carried out for a depth of 2.9 m during the same period as above (01.09.99 to 16.09.99). A comparison of calculations and measurements showed good agreement between the calculations and the measurements.

The calculations show that the temperatures at the bottom and the top are higher than the temperature at the sides, and the temperature difference is less than 2°C. The temperature at the bottom is slightly higher than the temperature at the top ($\Delta T \leq 0.5$°C). In contrast to this, the test showed a considerable temperature difference between the bottom, the top, and the sides, with a high value at the top and a low value at the bottom. In this example, the temperature at the circumference of the pipe is not constant because the not-unsteady effect of the natural convection between the inner conductor and the enclosing tube was included in the calculation.

© 2003 by CRC Press LLC

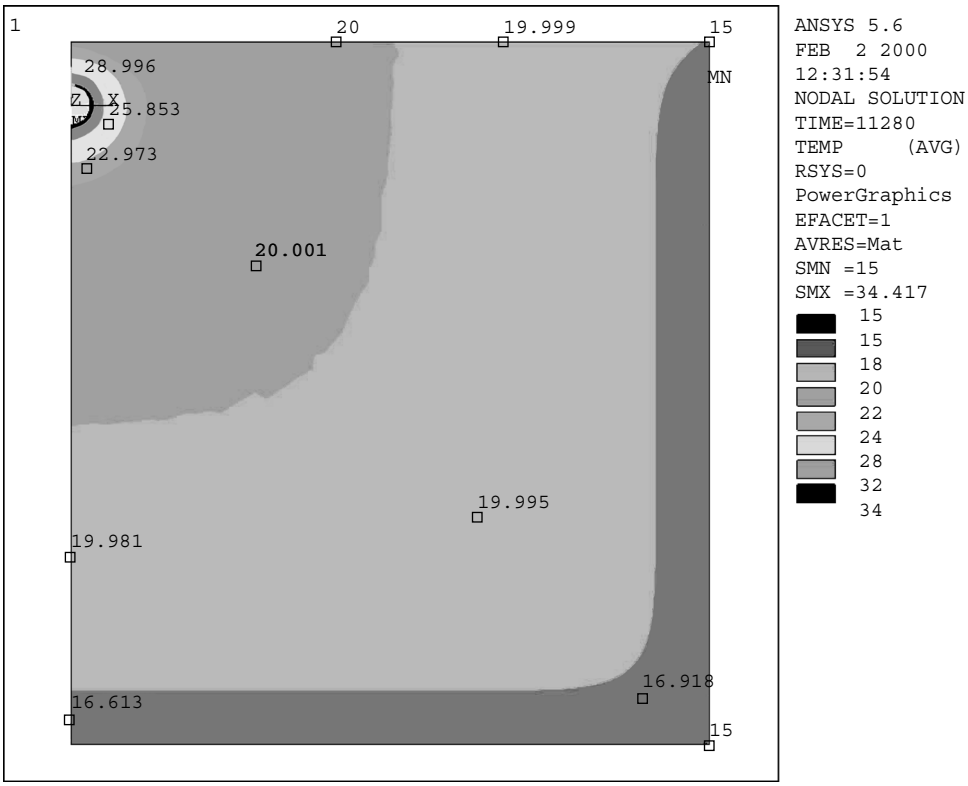

FIGURE 18.22 Temperature distribution at time t = 188 hours and at depth 1.2 m, heating phase. (Courtesy of Siemens.)

18.4.3.3.2 Mechanical Aspects

At measurement points in the middle of the right section on the buried GIL, only very minor movements were recorded. The measured values vary between –1.1 and 0 mm. This corresponds to the maximum absolute movement of the long section of pipe near the bend enclosure in the direction of shaft 1, which connected to the longest section (Figure 18.19). The two sections of pipe can be regarded as an adhesion zone.

A measurement point in the shaft at the end of the test section measures the movement of the expansion joint and at the same time corresponds to the change in the pipe. Measurements of the pipe movements are shown in Figure 18.23. The enclosing-tube temperatures at the first cross section at a distance of about 9 m from the shaft vary on average between 28 and 34°C in the case of the short cycles (ΔT = 6°C) and between 25 and 33°C in the case of the long cycles (ΔT = 8°C). During this period, the enclosing tube in the shaft moved from –3.4 to +0.8 mm, which corresponds to an absolute distance of Δl = 4.2 mm.

18.5 Advantages of GIL

The GIL is a system for the transmission of electricity at high power ratings over long distances. Current ratings of up to 4000 A per system and distances of several kilometers are possible in tunnel-laid or directly buried GILs. As a gas-insulated system, the GIL has the advantage of electrical behavior similar to that of an overhead line, which is important to the operation. Furthermore, the gases do not age, so there is almost no limitation in lifetime, which is a huge cost advantage given the high investment costs of underground power transmission systems.

© 2003 by CRC Press LLC

TABLE 18.8 GIL Movement in Long-Duration Tests

	Movement (mm)	Absolute Distance (mm)
Pt 2	–0.6/–0.4	0.2
Pt 3	–0.5/–0.3	0.2
Pt 4	–0.1/0	0.1
Pt 5	–1.1/–0.6	0.5

Source: Courtesy of Siemens.

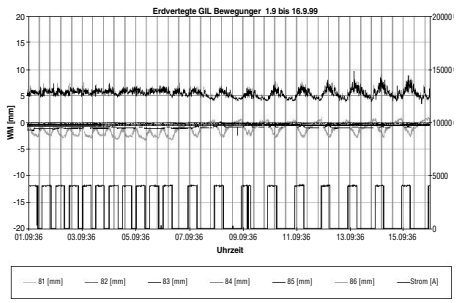

FIGURE 18.23 Mechanical aspects, movements of the enclosing tube during long-term testing of the directly buried GIL. (Courtesy of Siemens.)

Because of the large cross section of the conductor, the GIL has the lowest electrical losses of all available transmission systems, including overhead lines and cables. This reduces operating costs while reducing the utility's contribution to global warming, since less power needs to be generated.

Personnel safety in the presence of a GIL is very high because the metallic enclosure provides reliable protection. Even in the rare case of an internal failure, the metallic enclosure is strong enough to withstand the stress of failure. The inherent safety of the GIL system, which contains no flammable materials, makes it suitable for use in street or railway tunnels and on bridges. The use of existing tunnels has obvious economic advantages by sharing the costs and can solve some environmental problems because no additional overhead line is needed. Because of the low capacitive load of the GIL, long lengths of 100 km and more can be built.

The GIL is a viable and available technical solution to bring the power transmitted by overhead lines underground, without reducing power-transmission capacity, in cases where overhead lines are not possible.

18.5.1 Safety and Gas Handling

The GIL is a gas-filled, high-voltage system. The gases used, SF_6 and N_2, are inert and nontoxic. The 7-bar filling pressure of the GIL is relatively low. The metallic enclosure is solidly grounded and, because of the wall thickness of the outer enclosure, offers a high level of personal safety. The mechanized orbital-welding process ensures that the connections of the GIL segments are gastight for the system's lifetime.

Even in case of an internal failure, which is very unlikely, the metallic encapsulation withstands the internal arc so that no damage is inflicted on the surroundings. In arc fault tests in a laboratory, it was proven that no burn-through occurs with fault currents up to 63 kA, and the increase of internal pressure during an arc fault is very low. Even under an arc fault condition, no insulating gas is released into the atmosphere.

For the gas handling of the N_2/SF_6 gas mixture, devices are available for emptying, separating, storing, and filling the N_2/SF_6 gas mixtures. Figure 18.24 shows the closed circuit of the insulation gas with all devices used for gas handling. The initial filling is done by mixing SF_6 and N_2 in the gas mixing device

© 2003 by CRC Press LLC

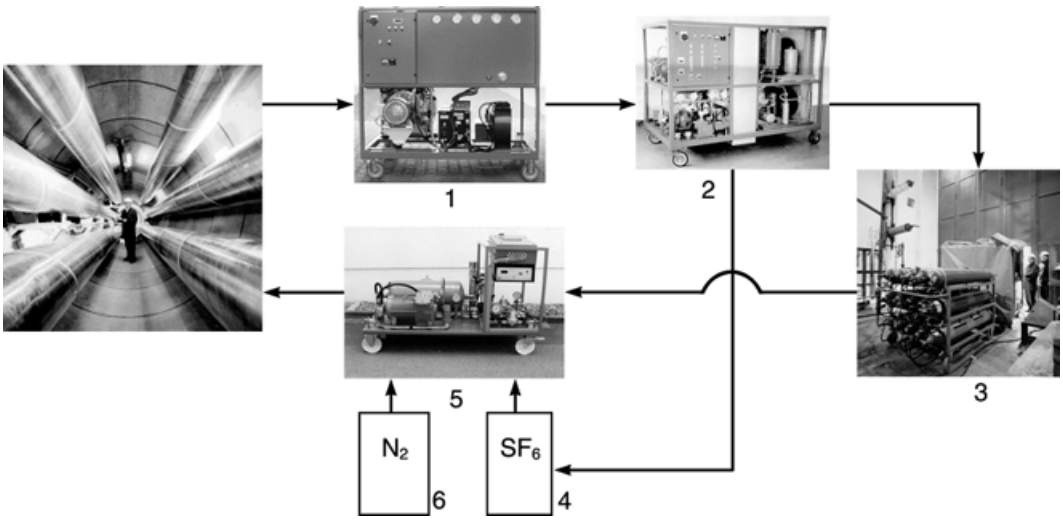

FIGURE 18.24 Gas-handling devices. (Courtesy of Siemens.)

(5) in the required gas mixture ratio. The initial filling is normally sufficient for the whole lifetime of the GIL because of the system's high gastightness. For emptying the GIL system, the gas is pumped out with a vacuum pump (1), filtered, and then separated (2) into pure SF_6 and a remaining gas mixture of N_2/SF_6. This N_2/SF_6 gas mixture has an SF_6 content of only a few percent (1 to 5%), so it can be stored under high pressure up to 200 bar in standard steel bottles (3). Three sets of steel bottles can hold the gas content of a 1-km section for storage. The pure SF_6 is stored (4) in liquid state. To fill or refill the GIL system, a gas mixing device (5) is used, including a continuous gas monitoring system for temperature, humidity, SF_6 percentage, and gas flow. The gas mixing device has input connections for pure N_2 (6), pure SF_6 (4), and gas mixtures containing a low percentage of SF_6. The mixing device adjusts the required N_2/SF_6 gas percentage used in the GIL, e.g., 80% N_2.

With these gas-handling devices, a complete cycle of use and reuse of the gas mixture is available. In normal use, the SF_6 and N_2 will not be separated completely because the gas mixture will be reused again. A complete separation into pure SF_6, as used, e.g., in gas-insulated substations (GIS), can be done by the SF_6 manufacturers. Thus the requirements of IEC 60480 [11] and IEC 61634 [3] are fulfilled.

18.5.2 Magnetic Fields

18.5.2.1 General Remarks

Magnetic fields can disturb electronic equipment. Devices such as computer monitors can be influenced by magnetic-field inductions of ≥2 μT. Furthermore, magnetic fields may also harm biological systems, including human beings, a subject of public discussion. A recommendation of the International Radiation Protection Association (IRPA) states a maximum exposure figure for human organisms of 100 μT. In Germany, this value has been a legal requirement since 1997 [19].

Several countries have recently reduced this limit for power-frequency magnetic fields. In Europe, Switzerland and Italy were the first to establish much lower values. In Switzerland, the maximum magnetic induction for the erection of new systems must be below 1 μT in buildings, according to NISV [20]. Today some exceptions may be accepted. In Italy, 0.5 μT has been proposed for residential areas in some regions, with the goal of allowing a maximum of 0.2 μT for the erection of new systems. This trend suggests that, in the future, electrical power transmission systems with low magnetic fields will become increasingly important.

The GIL uses a solid grounded earthing system, so the return current over the enclosure is almost as high as the current of the conductor. Therefore, the resulting magnetic field outside the GIL is very low.

© 2003 by CRC Press LLC

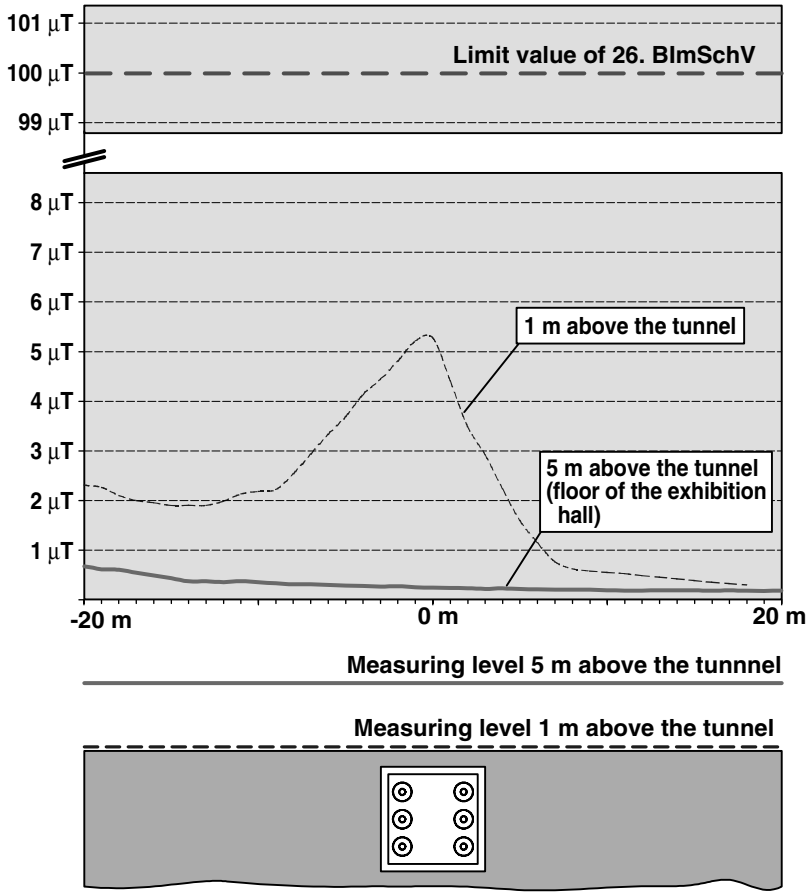

FIGURE 18.25 Measured values of the magnetic induction above the GIL tunnel at PALEXPO, Geneva, at a rated current of 2 × 1000 A. (Courtesy of Siemens.)

The installation at PALEXPO in Geneva demonstrates that GILs can fulfill the high future requirements that must be expected in European legislation.

18.5.2.2 Measurements of the Magnetic Field at PALEXPO, Geneva

The measurements at PALEXPO in Geneva were carried out with both GIL systems under operation with a current of 2 × 190 A. Based on the measured values, the magnetic induction was calculated for the load of 2 × 1000 A. Inside the tunnel between the two GIL systems, the maximum magnetic induction amounts to 50 µT.

The magnetic field at right angles to the GIL tunnel is presented in Figure 18.25. The measurements were taken at 1 m and 5 m above the tunnel, which is equivalent to the street level and to the floor of the PALEXPO exhibition hall. The magnetic induction on the floor of the fair building is relevant for fulfilling the Swiss regulations for continuous exposure to magnetic fields. The 1-m maximum value amounts to 5.2 µT above the center of the tunnel. The maximum induction at 5 m above the tunnel is 0.25 µT. This result is only 0.25% of the permissible German limit [12] and 25% of the new Swiss limit [20].

It is worth mentioning that cross-bonded high-voltage cable systems need to be laid at a depth of 30 m or more to achieve comparable induction values. There is a range of possibilities for reducing the magnetic field in cable systems, such as ferromagnetic shielding, compensation wires, or laying in steel tubes. All these measures, however, increase the losses markedly. Table 18.9 provides a comparison of different 400-kV transmission systems.

© 2003 by CRC Press LLC

TABLE 18.9 Comparison of Different 400-kV Transmission Systems

	VPE cable 2XS(FL)2Y[a] 1 × 2500, cross bonding	Overhead line 4 × 240/40 Al/St	GIL[a] 520/180
Rated voltage (kV)	400	400	400
Thermal limit load (MVA)	1080	1790	1790
Overload (60 min)	1.2 times	1.2 times	1.5 times
Reactive power compensation	Needed	Not needed	Not needed
Max. induction in (μT) at 2 × 1000 MVA at ground level	29	23.5	1.4
Thermal system losses[b] at 1000 MVA (W/m)	71	194	43
External influences (environment, animals)	No	Yes	No
Behavior in case of fire	Fire load with plastic	No additional fire load	No additional fire load
Damage to neighboring phases in event of failure	Possible	Possible	Not possible
Maintenance	Maintenance free[c]	Needed	Maintenance free[c]

[a] Tunnel laid, natural cooling, level above ground = 2 m.
[b] Conductor temperature = 20°C.
[c] Corrosion-protection test is required only for direct burial.
Source: Courtesy of Siemens.

A comparison of calculations and measurements made at PALEXPO shows that it is not sufficient to focus on the GIL only. The current distribution through the grounding systems around the GIL also has a significant influence. Along the overhead line, a current is induced into the ground wire and then conducted through the enclosure of the GIL. The increase in the magnetic field at a distance of 20 m from the GIL (Figure 18.25) is related to induced currents in the ground grid.

The magnetic inductions above the GIL trench are negligible and meet the Swiss requirements under full-load conditions. However, the results show that the magnetic fields induced by the grounding system also need to be considered in the system design. All measured and calculated values of the induction from the GIL are far smaller than those for comparable overhead lines and conventional cable systems.

18.6 Application of Second-Generation GIL

The first application of the second-generation of GIL was implemented between September and December 2000. After only 3 months erection time, the overhead line was brought underground into a tunnel (Figure 18.27). In January 2001 the line was energized again.

Figure 18.26 shows the delivery of GIL transport units to the preassembly area. The preassembly tent was placed directly under the overhead line and above the shaft connected to the tunnel right under the street. The space was limited because of an airport access road on one side and the highway to France on the other side. Nevertheless, the laying proceeded smoothly. The positive experience from this project shows that even GIL links for long distances can be installed within a reasonable time. The highly automated laying process has proved to guarantee a consistent quality on a very high level over the complete laying process, and the commissioning of the system was carried out without any failures.

During erection of the GIL, a preassembly tent was placed directly above the access shaft connected to the tunnel near Pylon 175 (Figure 18.27). The narrow space between an airport access road on one side and the highway A1 to France on the other side necessitated use of the space directly under the existing overhead line for the site work. A total of 162 pieces of straight GIL units, each 14 m long, were preassembled, brought into the tunnel, welded together, and continuously pulled toward the end of the tunnel at Pylon 176. Thanks to advanced site experience, it was possible to double productivity for assembly of the GIL sections from two connections per shift per day to four.

© 2003 by CRC Press LLC

FIGURE 18.26 Delivery of transport unit to the preassembly area. (Courtesy of Siemens.)

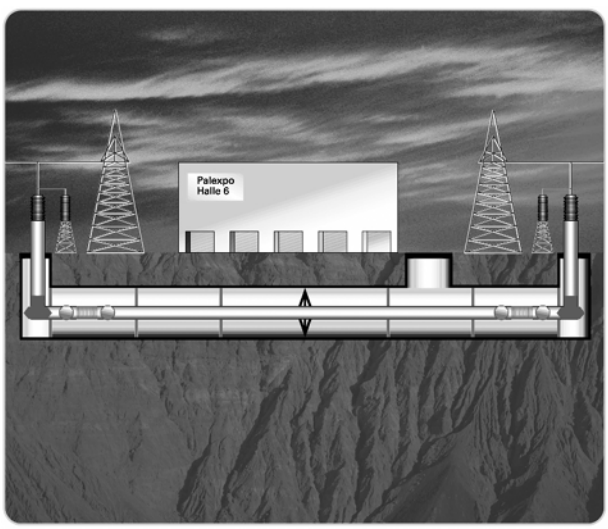

FIGURE 18.27 Principle of the PALEXPO project. (Courtesy of Siemens.)

Erection of the PALEXPO GIL started in September 2000 and was completed within 3 months. The double-circuit overhead line was brought underground into a square tunnel (Figure 18.8). The elastic bending of the GIL aluminum alloy tubes (minimum bending radius of 400 m) was sufficient to follow the layout of the tunnel route.

The technical data for the PALEXPO GIL are shown in Table 18.10. The power transmission capacity of the tunnel-laid GIL allows the maximum power of an overhead line to continue underground without any power transmission reduction. Surge arresters are used at the GIL terminations.

For monitoring and control of the GIL, secondary equipment is installed to measure the gas density. An electrical measurement system is used to detect arc location. Very fast transient electrical signals are measured at the ends of the GIL, and the position of a very unlikely internal fault can be calculated with an accuracy of ±25 m.

© 2003 by CRC Press LLC

TABLE 18.10 Technical Data for the PALEXPO GIL

Type	Design	Project
Nominal voltage (kV)	420	300
Nominal current (A)	3150/4000	2000
Lightning impulse volt (kV)	1425	1050
Switching impulse volt (kV)	1050	850
Power frequency volt (kV)	650	460
Rated short-time current (kA/3 s)	63	50
Rated gas pressure (bar)	7	7
Insulating gas mixture	80% N_2, 20% SF_6	80% N_2, 20% SF_6

Source: Courtesy of Siemens.

Given the importance of this high-voltage line for the power system — and despite the security constraints for the construction site — the operator endeavored to keep the line in service during the whole construction period. Operation of the link was suspended only for a span of 3 weeks during the GIL commissioning tests and connection.

18.7 Quality Control and Diagnostic Tools

In the complex insulation system of a real GIL, the intrinsic dielectric strength of N_2/SF_6 mixtures — presented in Section 4.1 by the pressure-reduced critical field — is affected by many factors. The usual surface roughness of metal surfaces is well understood in gas-insulated systems [21]. Metal protrusions or mobile particles are also studied in many cases, and their influence is also well understood [22].

The statistical distribution of breakdown voltage in gas mixtures was found to be similar to that of pure SF_6 of equal dielectric strength [23]. Therefore, the approved conventional test procedures for GIS can be applied to confirm the required withstand levels [21]. For insulation coordination (to make the correct choice of high voltage and best voltages for type testing) of extended transmission lines, the Weibull distribution has to be applied because of the statistical distribution of the flashover voltage levels [24]. Thus the knowledge and experience of more than 25 years of GIS installations and operation can be fully applied to GIL installations because GIS and GIL show the same statistical behavior for high voltage flashovers.

With careful assembly and efficient quality control, defects are practically ruled out. Mobile particles are the most common defect, and these are usually eliminated by conditioning procedures during power-frequency high-voltage testing [8]. In a conventional GIS with a complex insulation system, particles are moved by a stepwise increased ac field stress into low-field regions that act as natural particle traps. However, there are no such natural particle traps in the plain insulation system of a GIL. Therefore it has been equipped with artificial particle traps all along the GIL extension, and these traps have proved to be very efficient.

Modern diagnostics are applied for the detection, localization, and identification of defects. The VHF method proved to be most efficient [8]. Its application is restricted by signal attenuation and the correspondingly limited measuring range of installed sensors. In a GIS, this attenuation is mainly caused by the conical spacers that are usually installed. The maximum distance between sensors should therefore normally not exceed 20 m. In a GIL, an efficient VHF PD measurement can be carried out even with distances between sensors of several hundred meters. This enables use of the UHF method in a GIL, as successfully performed for the first time on site in Geneva [9].

Moisture penetration by diffusion through the enclosure and from the bulk of the insulators into the gas occurs much less frequently in a GIL than in a conventional GIS because of the excellent gastightness and the low amount of solid insulating material. The insulation quality of the insulator surfaces can therefore reliably be preserved by conventional measures to avoid dewy surfaces of reduced dielectric strength.

© 2003 by CRC Press LLC

Altogether, it can be expected that the GIL will give the same or even better long-term performance than a GIS, which demonstrates a long service lifetime with no critical aging even after 30 years of operation [25]. The GIL uses almost the same materials, while the amount of solid insulating material and SF_6 is considerably reduced. Moreover, the requisite quality control can be obtained by means of tests and modern diagnostics. In conclusion, it can be said that the on-site high-voltage quality control and the diagnostic tools used have proved to be very successful. The GIL in Geneva went into service without problem.

18.8 Corrosion Protection

For applications where aluminum pipes are used in air aboveground or in a tunnel, aluminum generates an oxide layer that protects the enclosure from any kind of corrosion. The oxide layer of an aluminum pipe is very thin, only a fraction of a micrometer, but it is very hard and very resistive against a gaseous environment like the atmosphere. In most cases it is not necessary, even in outdoor applications, to protect the aluminum pipes against corrosion with, e.g., coloring.

Going underground for directly buried systems, the situation regarding corrosion changes, and a corrosion protection is required. Two basic methods are used today: a passive corrosion protection and an active corrosion protection. The passive corrosion protection is an added layer of noncorrosive materials, e.g., polyethylene (PE) or polypropylene (PP), while the active protection system uses voltage protection to direct corrosion from the protective aluminum enclosure toward a loss electrode.

18.8.1 Passive Corrosion Protection

Passive corrosion protection is used widely for all kinds of metallic underground systems that have direct contact with the soil, e.g., electric power cables, oil or gas pipelines, and all kinds of other pipes.

There are several different technologies available on the market to add a coating to a pipe as a passive corrosion protection. In all cases, the processes used and the materials are similar. The surface of the metallic aluminum enclosure needs to be degreased, and the oxide layer needs to be removed. Acid fluids or mechanical brushes can be used to accomplish this. In some cases, both of them are used. If fluids are used to prepare the enclosure for the coating process, the pipe is run through a curtain of fluid acid. If mechanical treatment is used, then brushes treat the surface accordingly, sometimes together with a fluid. These processes are the same for steel and aluminum pipes and are run with the same machines. After the surface of the aluminum pipe is prepared, a first layer of a corrosion-protection fluid is brought onto the pipe to stop corrosion. This first layer is the active part of the passive corrosion protection and is only a few micrometers thick. On top of this layer, a 3- to 5-mm layer is added mainly for mechanical protection reasons. For this protective layer, two basic processes are applied: the extruded-layer and the tape-wrapped-layer methods. The use of these passive corrosion-protection methods has a long history and thousands of kilometers of experience as well as years of operating experience.

Figure 18.28 shows a GIL with passive corrosion protection. In the middle of the photo the blank aluminum enclosure is shown, prepared for the welding process. To the right and left of the blank, the small dark bands are the active corrosion protection layer. Finally, to the far right and left, is the white cover for mechanical protection, which is a PE or PP coating 3 to 5 mm thick.

After the pipe segments are welded together, it is also necessary to protect the welded area. There are various corrosion-protection processes available that can be applied on site. Figure 18.29 shows how one such on-site corrosion-protection method is applied. In this case, a corrosion-protection system based on a shrinking method is used. Other methods involve granulates or tapes and are also widely used in the pipeline industry.

18.8.2 Active Corrosion Protection

With an active corrosion-protection method, the induced current generates a voltage potential of the metallic enclosure toward the soil. If this voltage level is at a potential of around 1 V toward a loss

© 2003 by CRC Press LLC

FIGURE 18.28 GIL with passive corrosion protection. Center of photo: blank aluminum surface prepared for welding; dark bands on either side of aluminum surface: active corrosion protection layer (thickness of several micrometers); far left and right of photo: white surface providing mechanical protection (3 to 5 mm of PE or PP coating). (Courtesy of Siemens.)

electrode, then the loss electrode corrodes instead of the aluminum enclosure. The active corrosion-protection system is a backup to the passive corrosion-protection system. It is installed as an additional quality insurance system if the passive corrosion protection fails. Failures in the passive corrosion protection can occur over the lifetime of the system by outer damage through other earthworks or by cracks or voids in the protective material. If necessary, the active corrosion-protection system prevents corrosion in the event of cracks and voids in the passive corrosion-protection system.

Experience with installed, directly buried pipe systems worldwide shows that, over the decades, some cracks or voids in the passive corrosion-protection system can occur, which increases the induced current of the active protection system. The positive effect of the active corrosion-protection system is that each passive corrosion-protection failure need not be repaired immediately, and a guaranteed lifetime of the passive corrosion-protection system of 50 years can be extended by many more years. Repairs of passive corrosion-protection systems can be planned and concentrated on troublesome segments. Experience with oil and gas pipelines shows that the lifetime can be extended significantly without opening the pipe.

The active corrosion-protection system, also called cathodic corrosion protection, uses an induced current to adjust the protective voltage of approximately 1 V against the lost electrode. To reach this 1-V protective voltage, an induced current of approximately 100 μA is needed. The induced current is related to the total of the surface to be protected and increases with the length of the system and the numbers of failures. In practice, several kilometers can be protected with only one dc-voltage source because the current is low.

To obtain cathodic protection, the buried GIL must be a nonearthed system, which means that it must be insulated toward the ground potential. To allow the 1-V protection potential, the ground system is coupled with the GIL through a decoupling element, which could be a battery or a diode. This battery or diode ensures that a protective voltage of about 1 V is applied to the aluminum shield. If an earth fault of the electric system occurs, the failure current is conducted to the ground potential through the diode or battery.

Active corrosion protection can be easily installed along with the electrical transmission system, with no interferences between electrical transmission and the corrosion-protection voltage potential. Such electrical transmission systems have been operating for many years with no failures reported. The high reliability observed for pipelines and cables also applies to GIL systems.

© 2003 by CRC Press LLC

FIGURE 18.29 On-site corrosion protection of the welding area — shrinking method. (Courtesy of Siemens.)

18.9 Voltage Stress Coming from the Electric Power Net

18.9.1 Overvoltage Stresses

Two typical GIL applications are represented by the connection of 400-kV overhead lines to a GIL with a length of 1 km and 10 km. The overhead line is protected by two shielding wires along its full length. The height of the last three towers is about 65 m, and the maximum footing resistance for the towers is about 7.5 Ω.

© 2003 by CRC Press LLC

18.9.2 Maximum Stresses by Lightning Strokes

Based on these configurations of the overhead lines and the lengths of their insulator strings, the following maximum stresses by lightning strokes were evaluated and used to calculate the maximum overvoltage stresses on the GIL:

Remote stroke: 2000 kV and 2100 kV
Nearby direct strokes: 35 kA and 18 kA
Stroke to towers: 200 kA

18.9.3 Modes of Operation

The basic arrangement allows calculation of lightning strokes on the GIL for the following modes of operation:

- Transport:
  Overhead line connected by the GILs of 1-km and 10-km length
  Overvoltage stresses caused by lightning strokes to the overhead line
- Open end:
  GILs of 1-km and 10-km length connected on one end to the open bay of a substation
  Overvoltage stresses caused by lightning strokes to the overhead line

18.9.4 Application of External and Integrated Surge Arresters

To protect the GIL against high lightning and switching overvoltage stresses, external surge arresters located at the last towers of the overhead line, as well as encapsulated metal oxide surge arresters immediately connected to the GIL at certain locations (integrated surge arresters), can be applied. For 400-kV systems with an earth-fault factor of ≤1.4, the special integrated surge arresters have the following characteristic data:

Rated voltage, U_r = 322 kV
Continuous operating voltage, U_c = 255 kV
Residual voltage at 10 kA, U_{10kA} = 740 kV

External metal oxide surge arresters commonly used in German 400-kV systems — those with U_r = 360 kV, U_c = 288 kV, and U_{10kA} = 864 kV — were taken into account.

18.9.5 Results of Calculations

For each mode of operation, for both lengths of GIL, and for the different possibilities of surge-arrester application, the maximum overvoltage stresses (depending on the distance from the left-hand-side end of the GIL) have been calculated for all kinds of possible lightning strokes. In all cases, the maximum stresses are caused by nearby direct strokes to line conductors. For the various possibilities of surge-arrester application, the maximum lightning overvoltage stresses are listed in Table 18.11 for the GIL of 1-km length and in Table 18.12 for the GIL of 10-km length.

18.9.6 Insulation Coordination

At least up to a length of some tens of kilometers, lightning overvoltage stresses are decisive for the insulation coordination of a GIL, since stresses by switching overvoltages at those lengths will be much lower than on overhead lines because of their lower surge impedance (60 Ω compared with 300 Ω for an overhead line). The insulation coordination of a GIL of up to 10-km length considered here is therefore based on the maximum stresses by lightning overvoltages.

© 2003 by CRC Press LLC

TABLE 18.11 Maximum Overvoltage Stresses Depending on Mode of Operation and Number of Surge-Arrester Sets for a GIL of 1-km Length

Mode of Operation	Number of Surge-Arrester Sets at:		Maximum Overvoltages (kV) Caused by Nearby Direct Strokes to:	
	GIL	Tower[1]	(35 kA)	(18 kA)
Transport	2	—	1013 kV	913[b]
	2	2	952 kV	890
Open end	2	—	1066 kV	958[b]
	2	2	989 kV	938[b]

[1] Tower means last tower of overhead line before the GIL.
Source: Courtesy of Siemens.

TABLE 18.12 Maximum Overvoltage Stresses Depending on Mode of Operation and Number of Surge-Arrester Sets for a GIL of 10-km Length

Mode of Operation	Number of Surge-Arrester Sets at:		Maximum Overvoltages (kV) Caused by Nearby Direct Strokes to:	
	GIL	Tower[1]	(35 kA)	(18 kA)
Transport	2	—	996 kV	904 kV
	2	2	983 kV	890 kV
	4	—	867 kV	837 kV
	4	2	842 kV	829 kV
Open end	2	—	1048 kV	950 kV
	2	2	1035 kV	940 kV
	4	—	902 kV	883 kV
	4	2	893 kV	877 kV

[1] Tower means last tower of overhead line before the GIL.
Source: Courtesy of Siemens.

Given the large amount of experience already gained with design tests and on-site tests of huge gas-insulated substations (GIS), the following procedures are proposed for selecting test voltages for on-site tests on GIL sections of up to 1-km length and of type tests on a representative length of GIL:

18.9.6.1 On-Site Tests

On-site tests are designed to verify that the GIL is free of irregularities after laying and assembling. Taking into account the safety factor of $K_s = 1.15$ (according to IEC 60071-2), a withstand voltage of $U_w \geq 1.15\ U_{LEmax}$ — with U_{LEmax} = maximum overvoltage stress from the calculations — should be verified by these tests.

18.9.6.2 Type Tests (Design Tests)

On the other hand, the on-site test voltage corresponds to 80% of the required rated lightning-withstand voltage, U_{rw}, when type testing a representative length of GIL. At these tests, single flashovers on self-restoring insulation are permitted according to the applicable IEC standard 61640.

18.10 Future Needs of High-Power Interconnections

18.10.1 Metropolitan Areas

Metropolitan areas worldwide are growing in load density, mainly at their centers. Demand for power has grown because of the construction of huge residential and tall office buildings with air conditioning and lots of electronic equipment, leading to increases in electric loads of up to 10% per year in metropolitan areas

© 2003 by CRC Press LLC

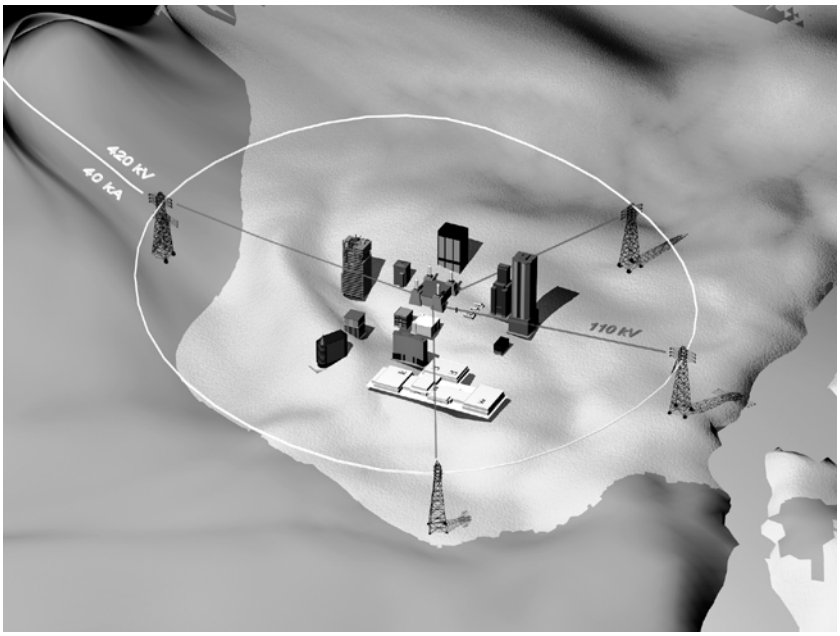

FIGURE 18.30 Power supply of metropolitan areas in 1970. (Courtesy of Siemens.)

[26]. The following short historical overview explains how the power supply of metropolitan areas has developed over the last 30 years.

Figure 18.30 shows the principle for power supply in a metropolitan area. Power generated in a rural area is connected to a metropolitan area by 420- or 550-kV overhead lines with a short-circuit rating of 40 kA. Several substations are placed around the city as overhead towers using a bypass or a ring structure around the metropolitan area, from which 110-kV cables transport electrical energy into the center of the city, where medium-voltage energy is distributed.

In Figure 18.31, the metropolitan area has grown, with more tall buildings in the center. Most cities still have a 420/550-kV ring around the city, but the short-circuit rating has been increased to 50 kA or, in some places, to 63 kA. Note the second connection to the ring from another rural power generation area. More 110-kV cables are connected to the ring to transport the energy to the substations in the city for distribution. To increase the power transportation into the center of the city, it is not possible to increase the voltage to 1000 kV because of dielectric problems. Moreover, worldwide experience with very high short-circuit ratings shows that short-circuit rating values cannot go far above 63 kA because of mechanical problems. So the only way to increase the power transportation into the city is to lay 400-kV underground bulk-power-transmission systems right into the center. In such cases, the GIL offers the best solution.

Figure 18.32 shows the metropolitan area as it may appear in 2010. The same metropolitan area with more buildings has grown further, and a 420/550-kV, 63-kA, double-system GIL was built as a diagonal connection underpassing the total metropolitan area. This GIL could have a length of 30 to 60 km. The solution illustrated here allows splitting of the short-circuit ratings of the ring into two half rings and to connect directly to the 400-kV high-transmission-power GIL in the center of the metropolitan area. The underground connection is a tunnel for GIL, as discussed in Chapter 4, High-Voltage Switching Equipment.

18.10.2 Use of Traffic Tunnels

GILs can safely be routed through tunnels carrying traffic on rails or streets. This new application for electrical transmission systems with solid insulated cables was not possible until today because of the

© 2003 by CRC Press LLC

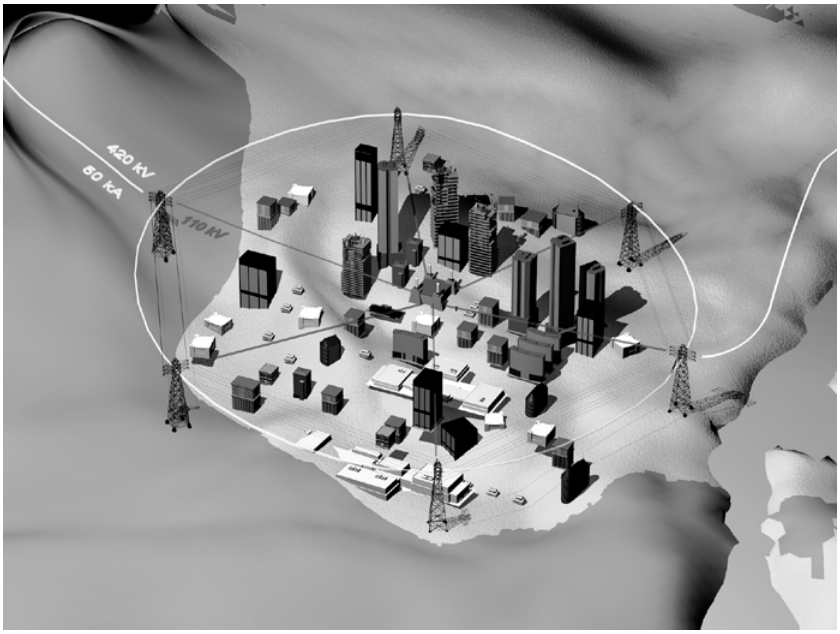

FIGURE 18.31 Power supply of metropolitan areas in 2000. (Courtesy of Siemens.)

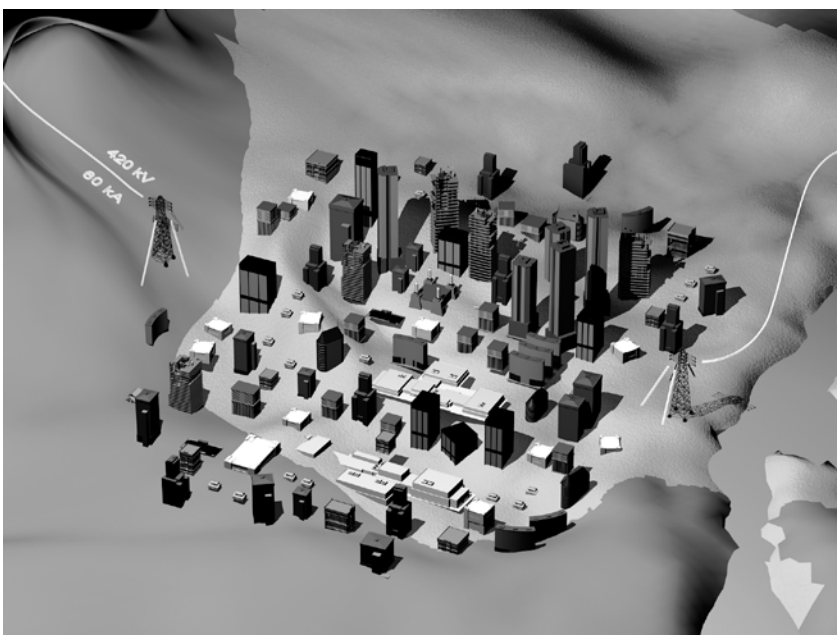

FIGURE 18.32 Power supply of metropolitan areas in 2010. (Courtesy of Siemens.)

risk of fire or explosion. The GIL has a solid metallic enclosure and does not burn or explode, as explained in Chapter 4, High-Voltage Switching Equipment. The combinations of GIL and street or railroad tunnels are shown in Figure 18.33. Three examples are given. The first one is a traffic tunnel with cars and a GIL mounted on top of the tunnel; the second is a double railroad tunnel system with a separate GIL tunnel; the third example is a double-track railroad tunnel with a GIL included.

© 2003 by CRC Press LLC

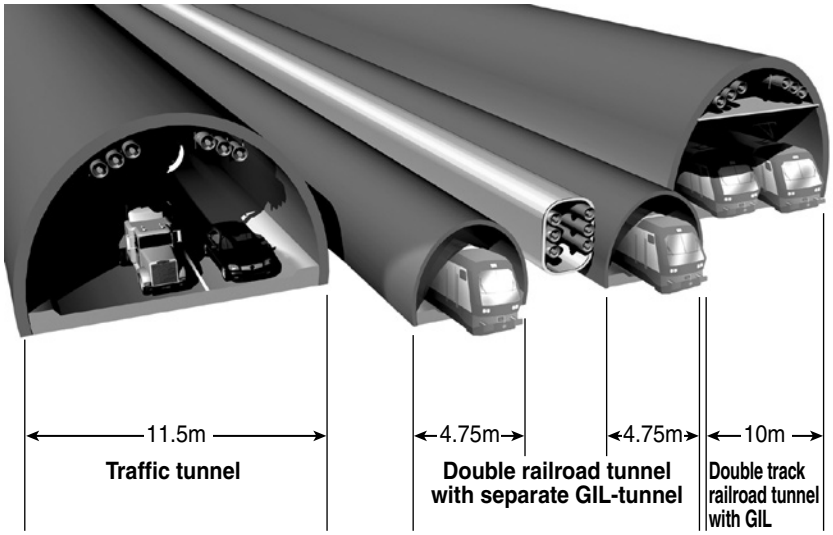

FIGURE 18.33 Different types of traffic tunnels to be used for GIL. (Courtesy of Siemens.)

The use of such traffic tunnels with GIL is now under investigation in different parts of the world. In the European Alps, interconnections between Germany, Austria, Switzerland, Italy, and France are now planned to improve the traffic flow and to allow trade of electric energy. In China and Indonesia, interconnections between the mainland and islands or between outlying islands are under investigation.

In the near future, GILs will become economically viable and will be widely used as high-power, long-distance transmission lines.

References

1. Koch, H. and Schuette, A., Gas-insulated Transmission Lines for High Power Transmission over Long Distances, paper presented at EPSR Conference, Hong Kong, Dec. 1997.
2. Koch, H., Underground gas-insulated cables show promise, *Modern Power Systems*, 21–24, May 1997.
3. Baer, G., Diessner, A., and Luxa, G., 420 kV SF6-insulated tubular bus for the Wehr pumped-storage plant, electric tests, *IEEE Trans. Power Appar. Syst.*, 95, 1976.
4. Henningsen, C.G., Kaul, G., Koch, H., Schuette, A., and Plath, R., Electrical and Mechanical Long-Time Behaviour of Gas-Insulated Transmission Lines, paper presented at CIGRE Session 2000, Paris.
5. Koch, H. et al., N_2/SF_6 Gas-Insulated Line of a New GIL Generation in Service, paper presented at CIGRE Session 2002, Paris.
6. International Electrotechnical Commission, Rigid High-Voltage, Gas-Insulated Transmission Lines for Rated Voltages of 72.5 kV and above, IEC 61640, IEC, Geneva, 1998-07.
7. Völcker, O. and Koch, H., Insulation co-ordination for gas-insulated transmission lines (GIL), *IEEE Trans.*, PE-102 PRD (07-2000).
8. Schichler, U., Gorablenkow, J., and Diessner, A., UHF PD Detection in GIS Substations during On-Site Testing, paper presented at 8th Int. Conf. on Dielectric Materials, Measurements and Application, Edinburgh, 2000, pp. 139–144.
9. Schöffner, G., Boeck, W., Graf, R., and Diessner, A., Attenuation of UHF Signals in GIL, paper 4-57 presented at 12th Int. Symp. on High Voltage Eng., Bangalore, 2001, pp. 453–456.
10. Schuette, A., Gas-Insulated Transmission Lines, Power Engineering Guide, Siemens, Erlangen, Germany, 1997.

© 2003 by CRC Press LLC

11. International Electrotechnical Commission, Guide to the Checking of Sulphur Hexafluoride (SF_6) Taken from Electrical Equipment, IEC 60480, IEC, Geneva, 1974-01.
12. International Electrotechnical Commission, High-Voltage Switchgear and Controlgear — Use and Handling of Sulphur Hexafluoride (SF_6) in High-Voltage Switchgear and Controlgear, IEC 61634, IEC, Geneva, 1995-05.
13. CIGRE Working Group 23.02, Task Force 01, Guide for SF_6 Mixtures, Brochure 163, CIGRE, Paris, 2000.
14. Christophorou, L.G. and van Brunt, L.R., SF_6–N_2 mixtures, *IEEE Trans. Dielectr. Electr. Insul.*, 2, 952–1003, 1995.
15. Knobloch, H., The Comparison of Arc-Extinguishing Capability of Sulphur Hexafluoride (SF_6) with Alternative Gases in High-Voltage Circuit Breakers, paper presented at 8th Int. Symp. on Gaseous Dielectrics, Virginia Beach, 1998.
16. Diessner, A., Koch, H., Kynast, E., and Schuette, A., Progress in High Voltage Testing of Gas-Insulated Transmission Lines, paper presented at ISH Conference, Montreal, 1997.
17. Koch, H. and Schuette, A., Gas-Insulated Transmission Lines (GIL) — Type Tests and Prequalification, Jicable, Versailles, 1999.
18. International Electrotechnical Commission, Calculation of the Continuous Current Rating of Cables (100% Load Factor), IEC 6060287, IEC, Geneva, 1982.
19. Germany: Sechsundzwanzigste Verordnung zur Durchführung des Bundesimmissionsschutzgesetzes (Verordnung über elektromagnetische Felder - 26. BImSchV), Dec. 16, 1996.
20. Switzerland: Verordnung über den Schutz vor Nicht Ionisierender Strahlung (NISV), Dec. 23, 1999.
21. Diessner, A., Finkel, M., Grund, A., and Kynast, E., Dielectric Properties of N_2/SF_6 Mixtures for Use in GIS or GIL, paper presented at IEEE High Voltage Engineering Symposium, Conf. Publ. 487, 1999.
22. Graf, R. and Boeck, W., Defect Sensibility of N_2-SF_6 Gas Mixtures with Equal Dielectric Strength, CEIDP Annual Report, Vol. 1, CEIDP, Victoria, 2000, pp. 422–425.
23. Graf, R. and Boeck, W., Statistical Breakdown Behaviour of N_2-SF_6 Gas Mixtures under LI Stress, paper 3.96.S20 presented at 11th Int. Symp. of High Voltage Eng., London, 1999.
24. Finkel, M., Boeck, W., Jänicke, L.-R., and Kynast, E., Experimental Studies on the Statistical Breakdown Characteristic of SF_6, CEIDP Annual Report, Vol. 1, CEIDP, Victoria, 2000, pp. 405–408.
25. CIGRE Task Force 15.03.07 of Working Group 15.03, Long Term Performance of SF_6 Insulated Systems, Report 15-301, CIGRE, Paris, 2002.
26. Hillers, T. and Koch, H., Gas Insulated Transmission Lines (GIL): A Solution for the Power Supply of Metropolitan Areas, paper presented at CEPSI Conference, Thailand, 1998.

© 2003 by CRC Press LLC